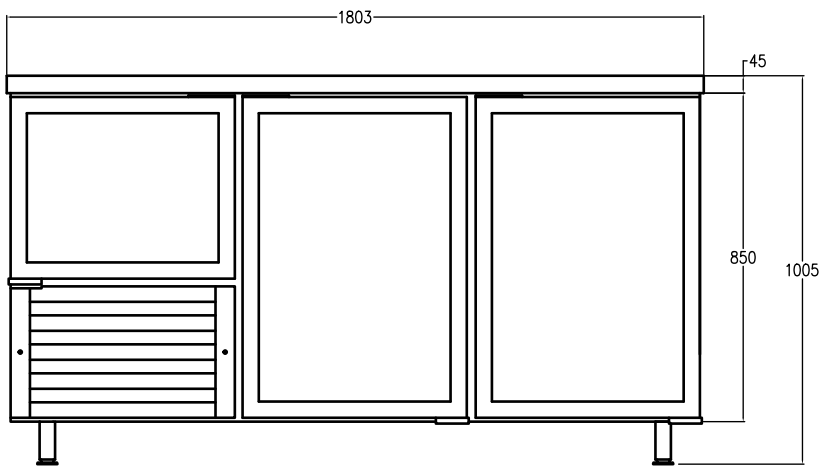

DEPTH

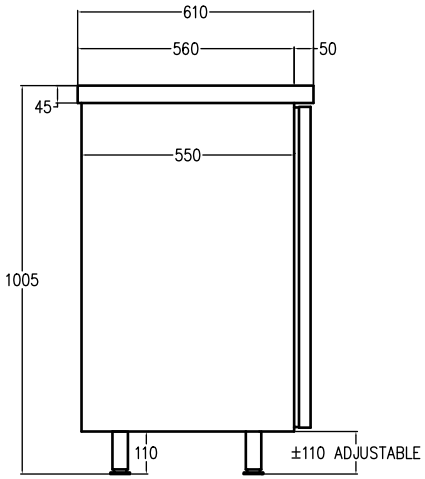

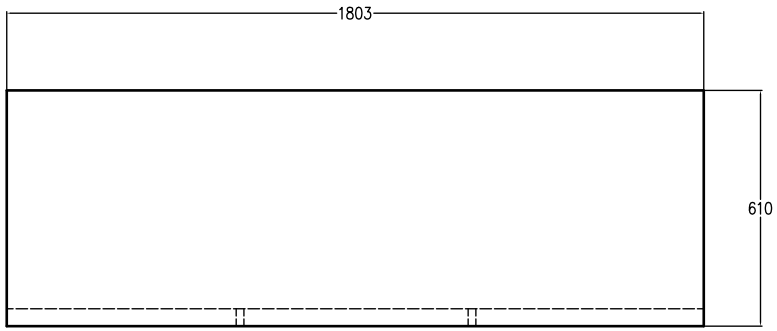

Issue	Revision Detail
–	–
	–

Supersedes	NONE
Checked	DEREK
Approved	DEREK
Projection	FIRST ANGLE
Tolerances	± 0.5 mm
Scale	N/A
Issue	01
Date	03 August 2015

Just For Efficiency, Just For Price, Just For You

Unauthorized Reproduction Is Strictly Prohibited

A4

Material	–
Thickness	–
Treatment	NONE
Part Size	–
Qty/Cabinet	1
Origin Sheet	–
Mc Sheet Size	–
Qty/Mc Sheet	–
Hurco No	N/A
Drawn By	DEREK
Part/Prog No	32255

Assembly	Description	Notes
UBG6180	3 VIEW DRAWING	–
–	–	–