SYNERGY®
grill technology

TRILOGY RANGE | ST0605

Product Information:

- Patented award winning gas burner system
- Electronic Ignition with flame detection probe. No thermocouples
- Rapid heat up system – ready to use in 30 minutes
- Up to 59% gas savings when compared with equivalent model grills (33 MJ/h Burners)
- Vortex air technology combined with a natural ceramic heat bed delivers exceptional heat distribution
- Robust 304 grade stainless steel construction
- SMART Digital controller with 10 power settings, one cooking zone with independent temperature regulation
- Slow Cook shelf and Garnish Rail supplied standard
- Griddle plate, divider plate, resting shelf, rotisserie and stand sold separately
- **24-months parts and labour warranty**

Specifications:

Model	ST0605
W x D x H (mm)	605 x 836 x 580
Cooking Area W x D (mm)	530 x 552
Weight	80kg
Packed Dimensions (mm)	700 x 900 x 700
Packed Weight (mm)	110kg
Electrical Connection	1Ø + N + E 240VAC / 50Hz / 0.06kW

	Natural	Universal LPG
Gas Connection	3/4" BSP	3/4" BSP
Minimum Normal Test Gas Pressure	1.3 kPa	2.75 kPa
Maximum Normal Test Gas Pressure	3.5 kPa	3.5 kPa
Nominal Test Point Pressure	1.0 kPa	2.50 kPa
Total Nominal Gas Consumption	27.97 MJ/h	27.97 MJ/h

Note: It is the responsibility of the installing gas plumber to ensure correct supply and connection sustaining appropriate pressure, when all installed gas appliances are operating at maximum.

Legend:

A	Gas Connection
B	Electrical Connection

General Drawing:

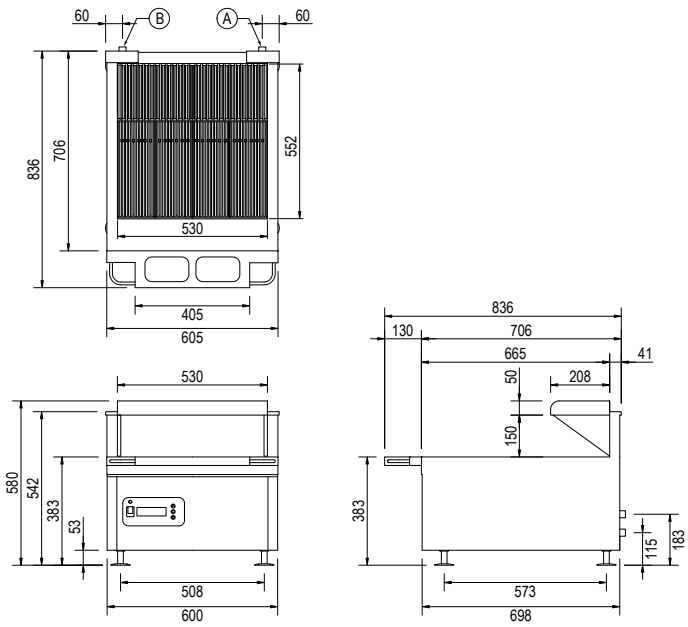

Due to continuous product research and development,
the information contained herein is subject to change without notice.

Revision: A - 31/05/2022 - 04

www.stoddart.com.au
www.stoddart.co.nz

AUSTRALIA AND NEW ZEALAND GAS SAFETY CERTIFICATION

STODDART®