PRODUCT DOCUMENT PACK

Prepared and distributed by KW Commercial Kitchen

PRODUCT

Modular Systems FED WC-1200 Stainless Steel Wall Cabinet – 1200mm | KW Commercial

Model / SKU: WC-1200

KW COMMERCIAL KITCHEN

7/72 Canterbury Road, Bankstown NSW 2200

Phone 1300 001 366

Email sales@kwcommercial.com.au

Web www.kwcommercial.com.au

Scan for the current KW product page

DOCUMENT NOTICE

The supplier document begins on the next page. KW contact branding is added in a separate footer area and does not replace the supplier's instructions, specifications or warranty terms.

Official supplier source: https://www.foodequipment.com.au/amfile/file/download/file/2775/product/5157/

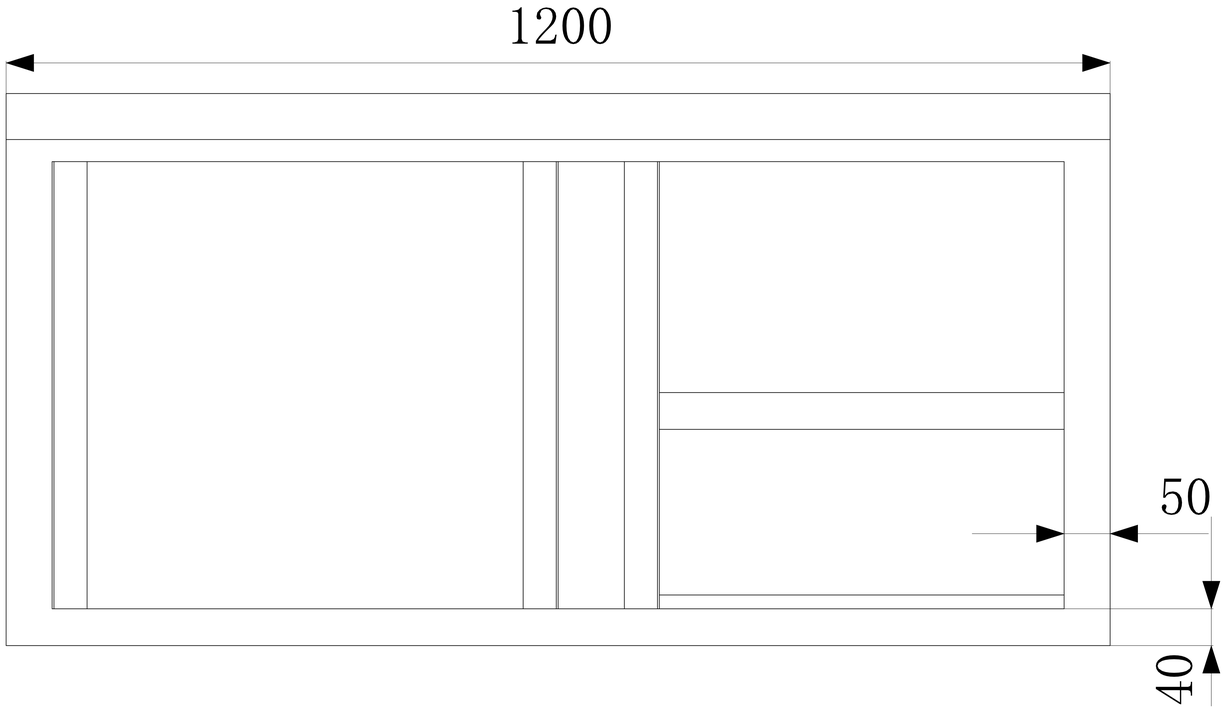

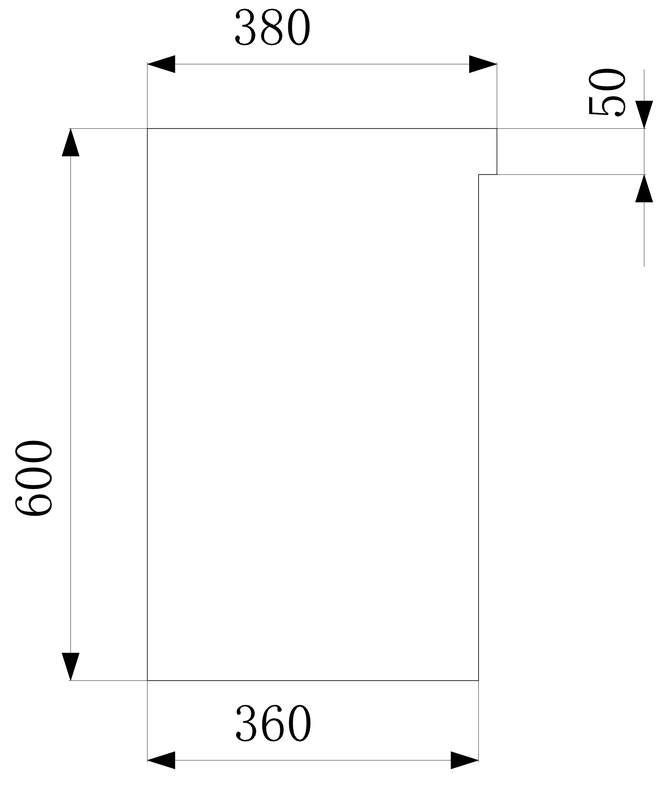

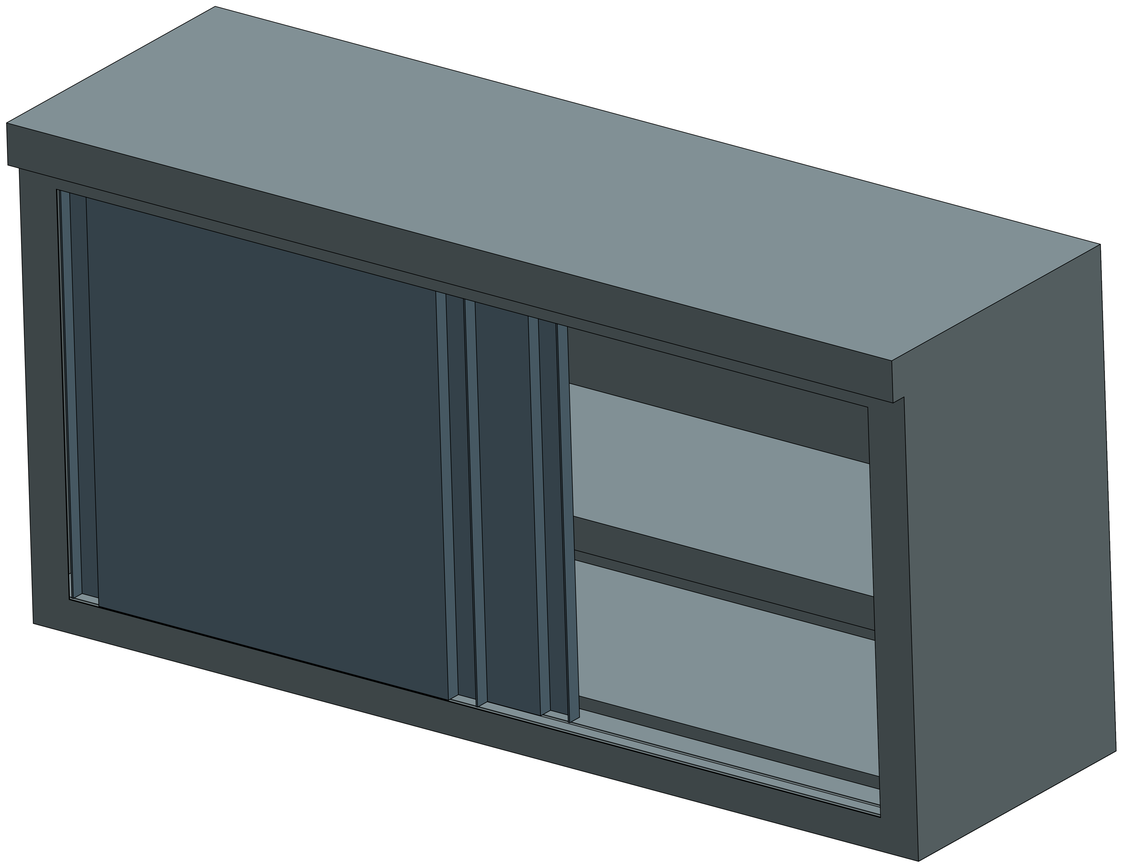

Autodesk Education
Autodesk Inventor Professional Educational Version - Limited Use
Not for Resale, Commercial, or Production Use