PRODUCT DOCUMENT PACK

Prepared and distributed by KW Commercial Kitchen

PRODUCT

Bonvue AD1-900 Pre-Assembled Single Layer Ambient Display Showcase – 48L, 920mm

Model / SKU: AD1-900

KW COMMERCIAL KITCHEN

7/72 Canterbury Road, Bankstown NSW 2200

Phone 1300 001 366

Email sales@kwcommercial.com.au

Web www.kwcommercial.com.au

Scan for the current KW product page

DOCUMENT NOTICE

The supplier document begins on the next page. KW contact branding is added in a separate footer area and does not replace the supplier's instructions, specifications or warranty terms.

Official supplier source: https://www.foodequipment.com.au/amfile/file/download/file/2381/product/7775/

AD1-900: 958*375*235MM

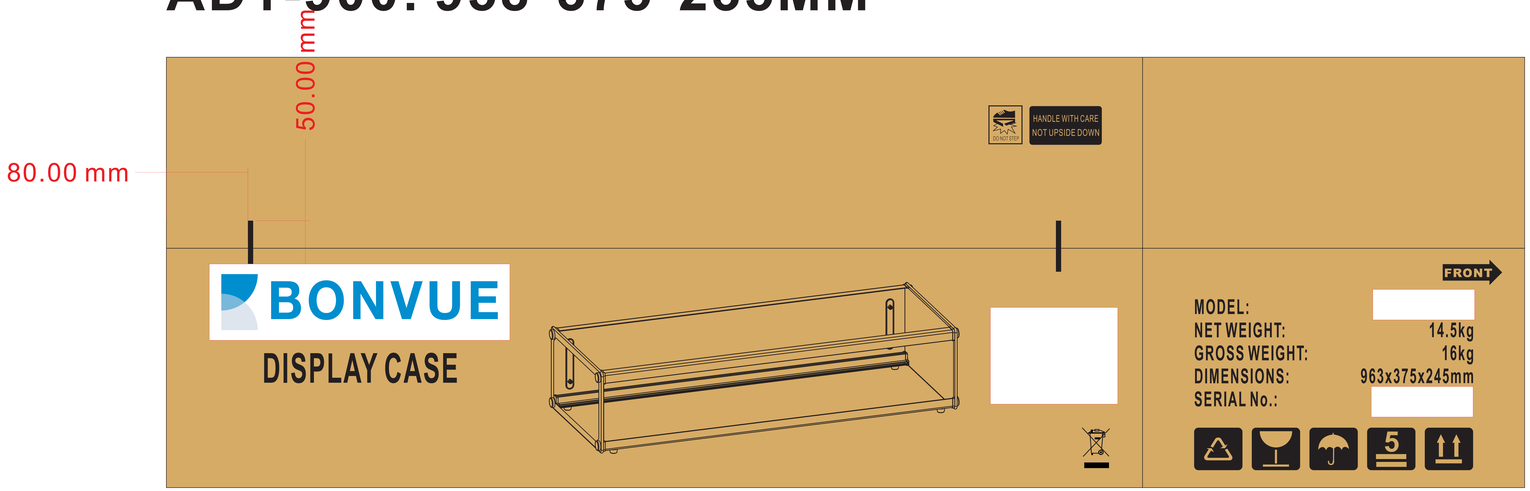

AD1-900

SIZE:125*95MM

AD1-1200: 1238*375*235MM

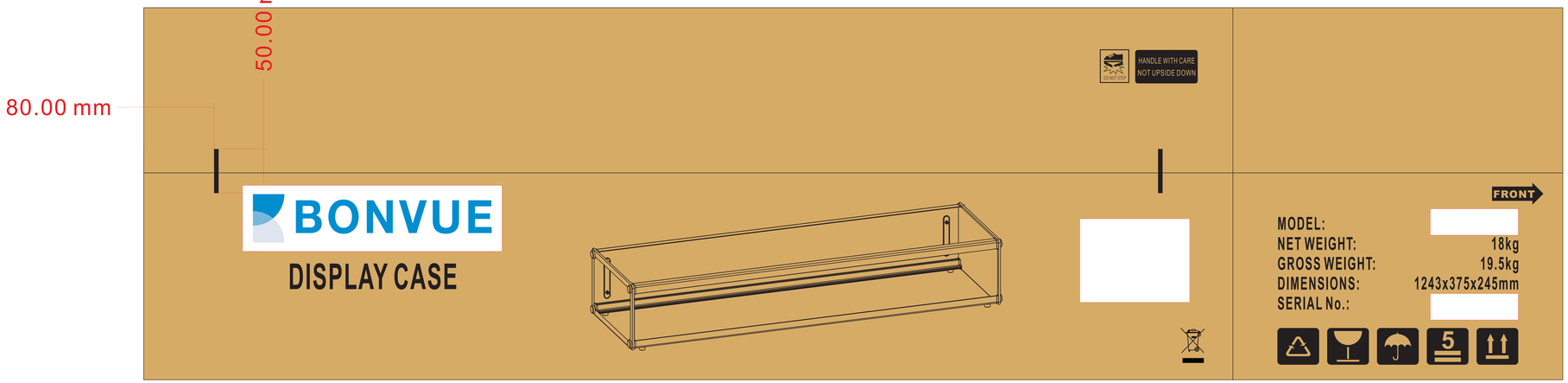

AD1-1200