PRODUCT DOCUMENT PACK

Prepared and distributed by KW Commercial Kitchen

PRODUCT

Turbofan E27M3 Full Size Manual Electric Convection Oven

Model / SKU: E27M3

KW COMMERCIAL KITCHEN

7/72 Canterbury Road, Bankstown NSW 2200

Phone 1300 001 366

Email sales@kwcommercial.com.au

Web www.kwcommercial.com.au

Scan for the current KW product page

DOCUMENT NOTICE

The supplier document begins on the next page. KW contact branding is added in a separate footer area and does not replace the supplier's instructions, specifications or warranty terms.

Official supplier source: https://moffat.global.ssl.fastly.net/sites/default/files/products/specification/E27M3_SK2731U_AN.pdf

turbofan®

20MSERIES

E27M3

Technical data sheet for

E27M3 ON THE SK2731U STAND

Full Size Manual / Electric Convection Oven
on a Stainless Steel Stand

E27M3 Unit shall be a Moffat electrically heated Turbofan convection oven. The oven shall have a one piece vitreous enamel oven chamber, stainless top and sides and safe touch vented easy clean drop down door. Oven shall have capacity for three full size sheet pans. The oven shall have 4.5kW heating elements. The unit shall have a bi-directional single reversing fan system. The oven shall be controlled by a mechanical thermostat with a range of 50-260°C, a 60 minute bake timer, and feature dual halogen oven lamps. Oven shall be able to be bench mounted on 76mm feet or mounted on oven stand models SK2731N or SK2731U. Unit shall be supplied in 100% recyclable shipping packaging.

SK2731N Unit shall be a Moffat Turbofan stainless steel oven stand. The stand shall be constructed from stainless steel tube with castors, with front castors having dual swivel and wheel locks. It shall be fitted with 6 tray runners suitable for up to 600 x 400 trays and GN 1/1 pans. The stand shall be fully compatible with, and support, Turbofan Convection Oven models E27, E28 and E31. Unit shall be supplied in 100% recyclable shipping packaging.

SK2731U Unit shall be a Moffat Turbofan stainless steel oven stand. The stand shall be constructed from stainless steel tube with castors, with front castors having dual swivel and wheel locks. It shall be fitted with 6 tray runners suitable for up to 12 half size sheet pans or 6 full size sheet pans. The stand shall be fully compatible with, and support, Turbofan Convection Oven models E27, E28 and E31. Unit shall be supplied in 100% recyclable shipping packaging.

STANDARD FEATURES

- 3 460mm x 660mm / 18” x 26” full size sheet pan capacity
- 3 400mm x 600mm tray capacity
- 85mm tray spacing
- Compact 810mm width
- Bi-directional reversing fan system
- 4.5kW heating power
- Vitreous enameled oven chamber
- Plug-in continuous oven door seal
- Safe-Touch vented drop down door
- Stay-Cool door handle
- Heavy-duty door hinges
- Easy clean door glass system
- Mechanical thermostat 50-260°C
- 60 minute timer with time up alarm
- Dual halogen oven lamps
- Dia. 180mm full stainless steel oven fan
- Anti-skid 50mm dia. 76mm high adjustable stainless steel feet
- 3 oven wire racks supplied
- 100% recyclable packaging

ACCESSORIES

- Turbofan SK2731N Oven Stand
  suits 400mm x 600mm trays and GN 1/1 pans
- Turbofan SK2731U Oven Stand
  suits 460mm x 660mm / 18” x 26” pans

MOFFAT®

turbofan®

20MSERIES

E27M3

E27M3 Full Size Manual / Electric Convection Oven on a Stainless Steel Stand

CONSTRUCTION
Vitreous enameled fully welded oven chamber
Stainless steel front, sides and top exterior
Stainless steel oven fan baffle and oven vent
Removable 3 position chrome plated wire side racks
Oven racks chrome plated wire (3 supplied)
Stainless steel frame drop down hinged door
5mm thick door outer glass
5mm thick low energy loss door inner glass
Heavy-duty counterbalanced door hinges
Wear resistant powder coated welded door handle
Stainless steel control panel
Aluminised coated steel base and rear panels

CONTROLS
Power ON control panel indicator
Mechanical thermostat 50-260°C
Heating ON control panel indicator
Manual 60 minute timer
Time-Up control panel indicator and buzzer
Over-temperature safety cut-out

CLEANING
Stainless steel top and sides continuous exterior panel
Vitreous enameled oven chamber
Fully removable chrome plated oven side racks
Removable stainless steel oven fan baffle
Full stainless steel oven fan
Easy clean door system with hinge out door inner glass (no tools required)
Removable plug-in oven door seal (no tools required)
76mm high stainless steel feet for easy access underside

SPECIFICATIONS
Electrical Requirements
230-240V, 50Hz, 1P+N+E, 4.7kW, 19.6A
No cordset supplied

External Dimensions
Width 810mm
Height 607mm including 76mm feet
Depth 762mm

Oven Internal Dimensions
Width 695mm
Height 305mm
Depth 470mm
Volume 0.10m3

Oven Rack Dimensions
Width 660mm
Depth 460mm

Nett Weight (E27M3)
61.9kg

Packing Data (E27M3)
79.5kg
0.55m3
Width 870mm
Height 755mm
Depth 835mm

SK2731U Stainless Steel Stand

All stainless steel welded frame oven stand for Turbofan E27, E28 and E31 Series model ovens
6 position tray runners standard
76mm diameter wheel swivel castors standard with 2 front castors with dual swivel and wheel lock
Welded 38mm and 32mm square tube front and rear frames
Welded rack supports/side frames
Top frame oven supports suit Turbofan E27, E28 and E31 Series oven mounting
Supplied CKD for assembly on site

External Dimensions (SK2731U Oven Stand)
Width 810mm
Height 880mm
Depth 650mm

Nett Weight (SK2731U Oven Stand)
19.5kg

Packing Data (SK2731U Oven Stand)
22kg
0.11m3
Width 830mm
Height 900mm
Depth 152mm

INSTALLATION CLEARANCES
Rear 25mm
LH Side 25mm
RH Side 25mm

CLEARANCE FROM SOURCES OF HEAT
A minimum distance of 300mm from the appliance sides is required

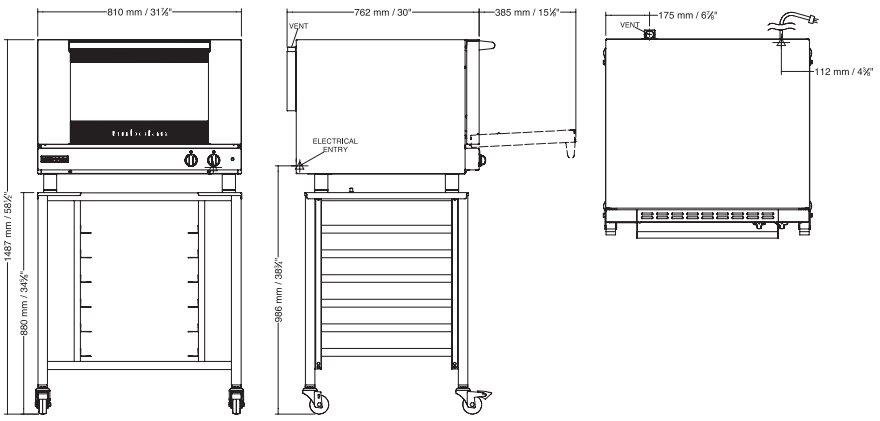

MOFFAT®

Australia
www.moffat.com.au
New Zealand
www.moffat.co.nz
www.turbofanoven.com

Australia
Moffat Pty Limited

Victoria/Tasmania
740 Springvale Road
Mulgrave, Victoria 3170
Telephone +61 3-9518 3888
Facsimile +61 3-9518 3833
vsales@moffat.com.au

New South Wales
Telephone +61 2-8833 4111
nswsales@moffat.com.au

South Australia
Telephone +61 3-9518 3888
vsales@moffat.com.au

Queensland
Telephone +61 7-3630 8600
qldsales@moffat.com.au

Western Australia
Telephone +61 8-9413 2400
wasales@moffat.com.au

New Zealand
Moffat Limited

Christchurch
45 Illinois Drive
Izone Business Hub
Rolleston 7675
Telephone +64 3-983 6600
Facsimile +64 3-983 6660
sales@moffat.co.nz

Auckland
Telephone +64 9-574 3150
sales@moffat.co.nz

24:7 Service Support

ISO9001 Quality Management Standard

Designed and manufactured by MOFFAT®

ISO9001
All Turbofan products are designed and manufactured by Moffat using the internationally recognised ISO9001 quality management system, covering design, manufacture and final inspection, ensuring consistent high quality at all times.

In line with policy to continually develop and improve its products, Moffat Limited reserves the right to change specifications and design without notice.

© Copyright Moffat Ltd

AN.TFN.S.1901

NSF

an Ali Group Company

Ali GROUP
The Spirit of Excellence