PRODUCT DOCUMENT PACK

Prepared and distributed by KW Commercial Kitchen

PRODUCT

Turbofan E28T4 Full Size Electric Convection Oven – 4 Tray Touch Screen

Model / SKU: E28T4

KW COMMERCIAL KITCHEN

7/72 Canterbury Road, Bankstown NSW 2200

Phone 1300 001 366

Email sales@kwcommercial.com.au

Web www.kwcommercial.com.au

Scan for the current KW product page

DOCUMENT NOTICE

The supplier document begins on the next page. KW contact branding is added in a separate footer area and does not replace the supplier's instructions, specifications or warranty terms.

Official supplier source: https://moffat.global.ssl.fastly.net/sites/default/files/products/specification/E28T4_SK2728T_N_U_AN.pdf

turbofan®

20TSERIES

E28T4

Technical data sheet for

E28T4 ON THE SK2728TN / SK2728TU STAND

Full Size Electric Convection Oven
TOUCH SCREEN CONTROL on a Stainless Steel Stand

E28T4
Unit shall be a Moffat electrically heated Turbofan convection oven. The oven shall have a one piece vitreous enamel oven chamber, stainless top and sides and safe touch vented easy clean drop down door. Oven shall have capacity for four full size sheet pans. The oven shall have 5.6kW heating elements. The oven shall have twin bi-directional single reversing fans. The oven shall feature a programmable Touch Screen menu controller, and feature dual halogen oven lamps. Oven shall be able to be bench mounted on 76mm feet or mounted on oven stand models SK2728TN or SK2728TU. Unit shall be supplied in 100% recyclable shipping packaging.

SK2728TN
Unit shall be a Moffat Turbofan stainless steel oven stand. The stand shall be constructed from stainless steel tube with castors, with front castors having dual swivel and wheel locks. It shall be fitted with 6 tray runners suitable for up to 600 x 400 trays and GN 1/1 pans. The stand shall be fully compatible with, and support, Turbofan Convection Oven models E27T2, E27T3 and E28T4.
Unit shall be supplied in 100% recyclable shipping packaging.

SK2728TU
Unit shall be a Moffat Turbofan stainless steel oven stand. The stand shall be constructed from stainless steel tube with castors, with front castors having dual swivel and wheel locks. It shall be fitted with 6 tray runners suitable for up to 12 half size sheet pans or 6 full size sheet pans. The stand shall be fully compatible with, and support, Turbofan Convection Oven models E27T2, E27T3 and E28T4.
Unit shall be supplied in 100% recyclable shipping packaging.

STANDARD FEATURES

- 4 460mm x 660mm / 18” x 26” full size sheet pan capacity
- 4 400mm x 600mm tray capacity
- 80mm tray spacing
- 945mm width
- Touch Screen control
- Icon driven program menu
- USB port for program/icon updating
- Individual shelf timers
- Multi-stage programs
- Steam injection mode and manual injection
- Twin bi-directional reversing fans
- 5.6kW heating power
- Vitreous enamel oven chamber
- Plug-in continuous oven door seal
- Safe-Touch vented drop down door
- Stay-Cool door handle
- Heavy-duty door hinges
- Easy clean door glass system
- Dual halogen oven lamps
- Twin dia. 180mm full stainless steel oven fans
- Anti-skid 50mm dia. 76mm high adjustable stainless steel feet
- 4 oven wire racks supplied
- 100% recyclable packaging

ACCESSORIES

- Turbofan SK2728TN Oven Stand
  suits 400mm x 600mm trays and GN 1/1 pans
- Turbofan SK2728TU Oven Stand
  suits 460mm x 660mm / 18” x 26” pans

MOFFAT®

turbofan®

20TSERIES

E28T4

E28T4 Full Size Electric Convection Oven TOUCH SCREEN CONTROL on a Stainless Steel Stand

CONSTRUCTION
Vitreous enameled fully welded oven chamber
Stainless steel front, sides and top exterior
Stainless steel oven fan baffle and oven vent
Removable 4 position chrome plated wire side racks
Oven racks chrome plated wire (4 supplied)
Stainless steel frame drop down hinged door
5mm thick door outer glass
5mm thick low energy loss door inner glass
Heavy-duty counterbalanced door hinges
Wear resistant powder coated welded door handle
Stainless steel control panel
Aluminised coated steel base and rear panels

CONTROLS
5.7" LED backlit touch screen
Icon driven program menu
BMP image icon imports via USB port
Temperature range 50-260°C
Individual shelf timers
Multi-stage programs
Over-temperature safety cut-out

CLEANING
Stainless steel top and sides continuous exterior panel
Vitreous enameled oven chamber
Fully removable chrome plated oven side racks
Removable stainless steel oven fan baffle
Full stainless steel oven fan
Easy clean door system with hinge out door inner glass (no tools required)
Removable plug-in oven door seal (no tools required)
76mm high stainless steel feet for easy access underside

SPECIFICATIONS
Electrical Requirements
230-240V, 50/60Hz, 1P+N+E, 5.8kW, 25A
No cordset supplied

Water Requirements (optional)
Cold water connection ¾" BSP male
80psi maximum inlet pressure / 20psi minimum inlet pressure

External Dimensions
Width 945mm
Height 567mm including 76mm feet
Depth 762mm

Oven Internal Dimensions
Width 695mm
Height 355mm
Depth 470mm
Volume 0.116m3

Oven Rack Dimensions
Width 660mm
Depth 460mm

Nett Weight (E28T4)
69.5kg

Packing Data (E28T4)
86.5kg
0.57m3
Width 875mm
Height 640mm
Depth 1010mm

SK2728TN/TU Stainless Steel Stand

All stainless steel welded frame oven stand for Turbofan E27T and E28T Series model ovens
6 position tray runners standard
76mm diameter wheel swivel castors standard with 2 front castors with dual swivel and wheel
Welded 38mm and 32mm square tube front and rear frames
Welded rack supports/side frames
4 dia. 76mm swivel castors with 2 front castors dual wheel and swivel lock
Top frame oven supports suit Turbofan E27T and E28T Series oven mounting
Supplied CKD for assembly on site

External Dimensions (SK2728TN/TU Oven Stand)
Width 945mm
Height 880mm
Depth 650mm

Nett Weight (SK2728TN/TU Oven Stand)
20.5kg

Packing Data (SK2728TN/TU Oven Stand)
23kg
4.6ft3 / 0.13m3
Width 955mm
Height 900mm
Depth 152mm

INSTALLATION CLEARANCES
Rear 25mm
LH Side 25mm
RH Side 25mm

CLEARANCE FROM SOURCES OF HEAT
A minimum distance of 300mm from the appliance sides is required

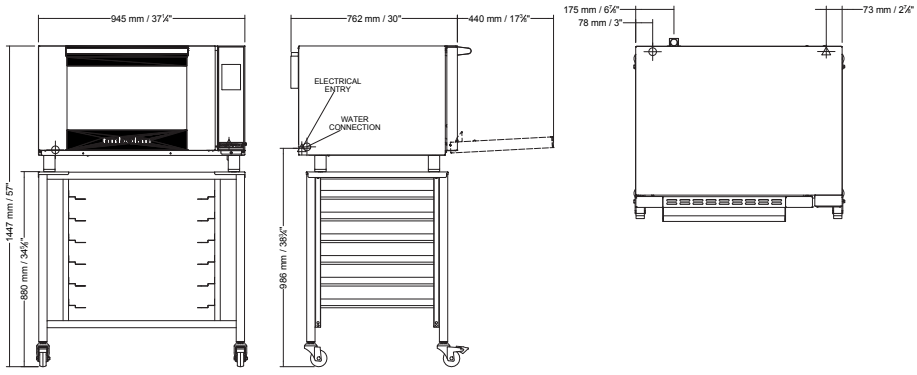

MOFFAT®

Australia
www.moffat.com.au
New Zealand
www.moffat.co.nz
www.turbofanoven.com

Australia
Moffat Pty Limited

Victoria/Tasmania
740 Springvale Road
Mulgrave, Victoria 3170
Telephone +61 3-9518 3888
Facsimile +61 3-9518 3833
vsales@moffat.com.au

New South Wales
Telephone +61 2-8833 4111
nswsales@moffat.com.au

South Australia
Telephone +61 3-9518 3888
vsales@moffat.com.au

Queensland
Telephone +61 7-3630 8600
qldsales@moffat.com.au

Western Australia
Telephone +61 8-9413 2400
wasales@moffat.com.au

New Zealand
Moffat Limited

Christchurch
45 Illinois Drive
Izone Business Hub
Rolleston 7675
Telephone +64 3-983 6600
Facsimile +64 3-983 6660
sales@moffat.co.nz

Auckland
Telephone +64 9-574 3150
sales@moffat.co.nz

24:7 Service Support

ISO9001 Quality Management Standard

Designed and manufactured by MOFFAT®

ISO9001
All Turbofan products are designed and manufactured by Moffat using the internationally recognised ISO9001 quality management system, covering design, manufacture and final inspection, ensuring consistent high quality at all times.

In line with policy to continually develop and improve its products, Moffat Limited reserves the right to change specifications and design without notice.

© Copyright Moffat Ltd

AN.TFN.S.1901

NSF

an Ali Group Company

ali GROUP
The Spirit of Excellence