PRODUCT DOCUMENT PACK

Prepared and distributed by KW Commercial Kitchen

PRODUCT

Full Size 8 Tray Prover/Holding Cabinet – Turbofan P85M8

Model / SKU: P85M8

KW COMMERCIAL KITCHEN

7/72 Canterbury Road, Bankstown NSW 2200

Phone 1300 001 366

Email sales@kwcommercial.com.au

Web www.kwcommercial.com.au

Scan for the current KW product page

DOCUMENT NOTICE

The supplier document begins on the next page. KW contact branding is added in a separate footer area and does not replace the supplier's instructions, specifications or warranty terms.

Official supplier source: https://moffat.global.ssl.fastly.net/sites/default/files/products/specification/P85M8_AN.pdf

Technical data sheet for

P85M8 PROVER/HOLDING CABINET

Full Size 8 Tray Electric / Manual Prover/Holding Cabinet

P85M8

Unit shall be a Moffat electrically heated Turbofan Prover and Holding Cabinet. The prover and holding cabinet shall have double skin construction with stainless steel interior and exterior sides, front and top. Door shall be side hinged and field reversible. Unit shall have capacity for 8 16” x 29” trays, or 8 18” x 30” trays with optional 18” rack set. A single speed fan shall gently and evenly circulate air around the cabinet. Cabinet shall be controlled by a mechanical thermostat and humidity via a control of the water tank. A thermometer shall indicate the cabinet temperature. Prover and holding cabinet shall be mounted on castors, with two rigid castors at rear and two swivel castors dual swivel and wheel lock and front. Prover and Holding cabinet shall operate independently or in combination with Moffat Turbofan model E35D or E35T Convection Ovens. Prover and Holding Cabinets shall be fitted with 10A cordsets. Unit shall be supplied in 100% recyclable shipping packaging.

STANDARD FEATURES

- Dual function Prover and Holding Cabinet
- Designed for individual use or system installed with Turbofan E35D and E35T Convection Ovens
- 8 406mm x 736mm / 16” x 29” tray capacity
- 76mm tray spacing
- 910mm width
- 10A cordset fitted
- Full double skin construction
- Auto water fill system with optional integrated water filter kit
- Continuous door seal
- Side hinged door (standard LH hinge). Optional RH hinge (field convertible)
- Off / Proof / Hold mode selection
- Low velocity circulation fan system
- Mechanical thermostat
- Humidity level control
- Dual halogen cabinet interior lamps
- Cabinet temperature display thermometer
- 4 dia. 76mm castors with 2 front castors dual wheel and swivel lock, 2 rigid rear castors
- 100% recyclable packaging

OPTIONS

- 457mm x 762mm / 18” x 30” tray rack set for prover

ACCESSORIES

- Optional M236060 Core Temperature Probe Kit
- Optional 3M Cuno water filter kit complete with cartridge and connection fittings (Installs in pre-fitted rear housing of cabinet for flush rear installation)

turbofan®

PSERIES

P85M8

P85M8 Full Size Manual / Electric Prover/Holding Cabinet

CONSTRUCTION
304 stainless steel interior cabinet
Stainless steel front, sides and top exterior
Stainless steel interior side racks
Stainless steel frame side hinged door
5mm thick door glass
Stainless steel control panel
Aluminised coated steel base and rear panels

CONTROLS
Off / Proof / Holding mode selector switch.
Mechanical thermostat 20-85°C
Air heating ON control panel indicator
Humidity level control
Humidity tank ON control panel indicator
Cabinet temperature thermometer
Auto-fill water system standard

CLEANING
Stainless steel top and side exterior panels
Stainless steel interior chamber
Easy access to all interior surfaces
Fully removable stainless steel rack support
Removable humidity water tank (no tools)

SPECIFICATIONS

Electrical Requirements
230-240V, 50Hz, 1 phase, 1.5kW, 6.2A
10A cordset fitted

Water Requirements (optional)
Cold water connection ¾" BSP male
80psi maximum inlet pressure / 20psi minimum inlet pressure

External Dimensions

Width	910mm
Height	914mm including dia. 76mm castors
Depth	880mm

Prover Internal Dimensions

Width	465mm
Height	730mm
Depth	795mm
Volume	0.27m³

Nett Weight (P85M8)
93kg

Packing Data (P85M8)
133kg
1.05m³

Width	950mm
Height	1070mm
Depth	1020mm

INSTALLATION CLEARANCES

Rear	25mm
LH Side	25mm
RH Side	25mm

CLEARANCE FROM SOURCES OF HEAT
A minimum distance of 300mm from the appliance sides is required

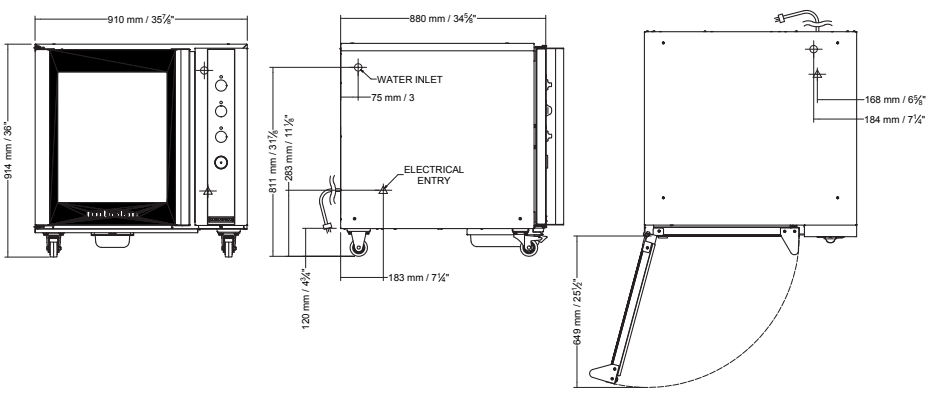

MOFFAT®

Australia
www.moffat.com.au
New Zealand
www.moffat.co.nz
www.turbofanoven.com

Australia
Moffat Pty Limited

Victoria/Tasmania
740 Springvale Road
Mulgrave, Victoria 3170
Telephone +61 3-9518 3888
Facsimile +61 3-9518 3833
vsales@moffat.com.au

New South Wales
Telephone +61 2-8833 4111
nswsales@moffat.com.au

South Australia
Telephone +61 3-9518 3888
vsales@moffat.com.au

Queensland
Telephone +61 7-3630 8600
qldsales@moffat.com.au

Western Australia
Telephone +61 8-9413 2400
wasales@moffat.com.au

New Zealand
Moffat Limited

Christchurch
45 Illinois Drive
Izone Business Hub
Rolleston 7675
Telephone +64 3-983 6600
Facsimile +64 3-983 6660
sales@moffat.co.nz

Auckland
Telephone +64 9-574 3150
sales@moffat.co.nz

24:7 Service Support

ISO9001 Quality Management Standard

Designed and manufactured by MOFFAT®

ISO9001
All Turbofan products are designed and manufactured by Moffat using the internationally recognised ISO9001 quality management system, covering design, manufacture and final inspection, ensuring consistent high quality at all times.

In line with policy to continually develop and improve its products, Moffat Limited reserves the right to change specifications and design without notice.

© Copyright Moffat Ltd

AN.TFN.S.1901

NSF

an Ali Group Company

ali GROUP
The Spirit of Excellence