PRODUCT DOCUMENT PACK

Prepared and distributed by KW Commercial Kitchen

PRODUCT

Baker Max ME2ST-1D Stackable Steam Deck Oven – 2×600×400mm, 8.6kW

Model / SKU: ME2ST-1D

KW COMMERCIAL KITCHEN

7/72 Canterbury Road, Bankstown NSW 2200

Phone 1300 001 366

Email sales@kwcommercial.com.au

Web www.kwcommercial.com.au

Scan for the current KW product page

DOCUMENT NOTICE

The supplier document begins on the next page. KW contact branding is added in a separate footer area and does not replace the supplier's instructions, specifications or warranty terms.

Official supplier source: https://www.foodequipment.com.au/amfile/file/download/file/4772/product/9380/

ME2ST-1D EXPLODED DIAGRAM

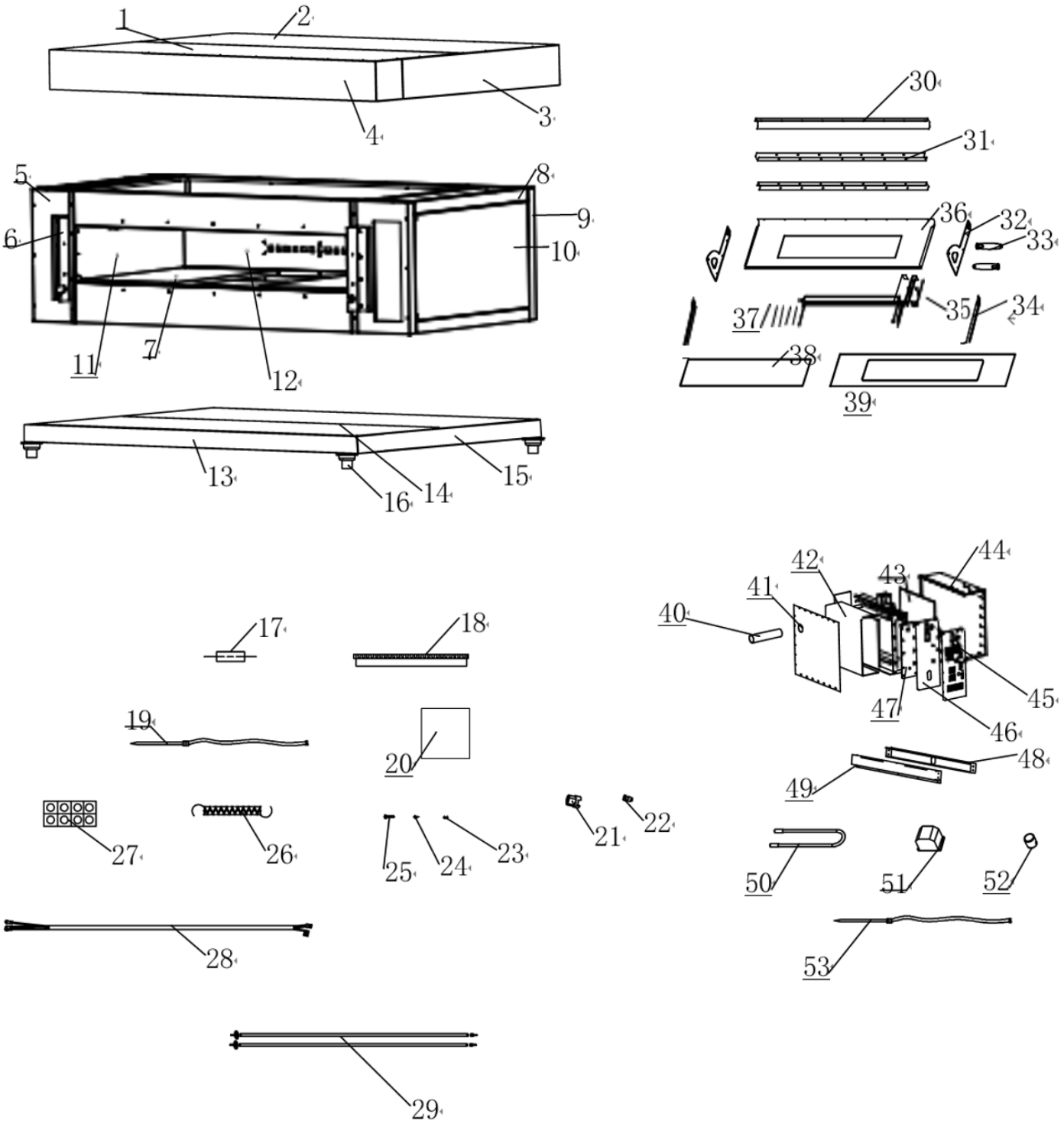

FHE After Sales Service & Support（AU）
Phone: 1300887055
Spares Email: spares@fedservices.com.au

FHE After Sales Service & Support (NZ)
Phone: 09 415 6471
Service Email: service@fedproducts.co.nz

ME2ST-1D PARTS LIST

Item	FHE Part Code	Description	Qty
1	ME2ST-1D-ETFP	External Top Front Plate	1
2	ME2ST-1D-ETRP	External Top Rear Plate	1
3	ME2ST-1D-HLRSP	Hood Left and Right Side Panels	2
4	ME2ST-1D-HFP	Hood Front Panel	1
5	ME2ST-1D-OBFP	Outer Box Front Panel	1
6	ME2ST-1D-DSR	Door Shaft Reinforcement	2
7*	180540006	Pizza Stone 429mm X 600mm X 15mm	2
8	ME2ST-1D-OBSB	Outer Box Side Beam	4
9	ME2ST-1D-OBRP	Outer Box Rear Panel	1
10	ME2ST-1D-OBSP	Outer Box Side Panel	2
11	ME2ST-1D-IBLRSP	Inner Box Left and Right Side Panels	2
12	ME2ST-1D-IBBP	Inner Box Back Panel	1
13	ME2ST-1D-CFP	Chassis Front Panel	1
14	ME2ST-1D-BPC	Bottom Plate Cover	2
15	180300279	Square Tube Chassis	1
16	18320008	Adjustable Feet	4
17	ME2ST-1D-EP	Exhaust Pipe	1
18	220300229	Wire Duct	1
19*	182900006	Temperature Probe	2
20*	180510007	Lamp Glass 87mm X 87mm	1
21	183600012	Door Axis	2
22	183600011	Spring Locating Column	2
23	133500496	Rivet	50
24	133500311	Self-Tapping	10
25	183500030	Screw	2
26	ME2-1D-Spring	Spring 183800000-Small	2
27	182900008	Wiring Porcelain Seat	1
28	182300040	Cable	1
29*	182000006	Top Heating Tube 220V 500W	6
	182000007	Bottom Heating Tube 220V 600W	6
30	ME2ST-1D-DULR	Door Upper and Lower Reinforcement	1
31	ME2ST-1D-SDB	Strengthening of Door Beam	2
32	ME2ST-1D-DHFP	Door Handle Fixing Plate	2
33*	183300001	Door Handle	2
34	ME2ST-1D-DALRS	Door Axis Left and Right Strengthened	2
35	ME2ST-1D-DLRR	Door Left and Right Reinforcement	1

FHE After Sales Service & Support（AU）
Phone: 1300887055
Spares Email: spares@fedservices.com.au

FHE After Sales Service & Support (NZ)
Phone: 09 415 6471
Service Email: service@fedproducts.co.nz

ME2ST-1D PARTS LIST

Item	FHE Part Code	Description	Qty
36	ME2ST-1D-DL	Door Lining	1
37	ME2ST-1D-GF	Glass Frame	1
38*	180510009	Internal Door Glass 632mm X 161mm	1
39*	130510030	External Door Glass 923mm X 194mm	1
40	ME2ST-1D-SP	Steam Pipe	1
41	ME2ST-1D-OBRP	Outer Box Rear Panel	1
42	ME2ST-1D-IBHSP	Inner Box Heat Storage Plate	1
43	ME2ST-1D-UIBHSP	Upper Inner Box Heat Storage Plate	1
44	ME2ST-1D-OBGP	Outer Box Guard Plate	1
45	ME2ST-1D-OBLSP	Outer Box Left Side Panel	1
46	ME2ST-1D-OBLSTP	Outer Box Left Side Inner Panel	1
47	ME2ST-1D-DHFP	Door Handle Fixing Plate	1
48	ME2ST-1D-USB	Upper Steam Baffle	1
49	ME2ST-1D-BSB	Bottom Steam Baffle	1
50*	182000008	Steamer Heating Tube	1
51*	182400043	AC Contactor	1
52*	182900009	Solenoid Valve	1
	182900006	Temperature Probe	1
	182400034	Control Board	
	ME2-1D-CD	Complete Door 930*295*150mm HB8001	
	132700004	Control Transformer	
	182700002	Lamp 220V 45W	
OPT.	133200042	Brake Castor 5 Inch PVC	
OPT.	133200037	Normal Castor 5 Inch PVC	
	ME2ST-1D-RDS	Red Door Seal	

*Wearable parts

FHE After Sales Service & Support（AU）
Phone: 1300887055
Spares Email: spares@fedservices.com.au

FHE After Sales Service & Support (NZ)
Phone: 09 415 6471
Service Email: service@fedproducts.co.nz