PRODUCT DOCUMENT PACK

Prepared and distributed by KW Commercial Kitchen

PRODUCT

Waldorf Bold RNB8616GE - 900mm Gas Range Electric Static Oven

Model / SKU: RNB8616GE

KW COMMERCIAL KITCHEN

7/72 Canterbury Road, Bankstown NSW 2200

Phone 1300 001 366

Email sales@kwcommercial.com.au

Web www.kwcommercial.com.au

Scan for the current KW product page

DOCUMENT NOTICE

The supplier document begins on the next page. KW contact branding is added in a separate footer area and does not replace the supplier's instructions, specifications or warranty terms.

Official supplier source: https://moffat.global.ssl.fastly.net/sites/default/files/products/specification/RN861XGE_AN.pdf

Technical data sheet for

GAS RANGE ELECTRIC STATIC OVEN 900mm

RN8610GE, RN8613GE, RN8616GE, RN8619GE

RN8610GE

- Heavy-duty construction
- 28 MJ/hr open burners
- Flame failure standard
- Pilot burners optional
- 300mm, 600mm, and 900mm griddle plate options
- Optional simmer plates
- GN 2/1 6.5kW electric static oven
- Drop down door
- Stainless steel exterior
- Easy clean
- Easy service
- Fully modular
- Low back models (RNL) available

Overall Construction

- Galvanized steel chassis
- Welded hob with 1.5mm 304 stainless steel bull nose
- Splashback and hob sides 1.2mm 304 stainless steel
- Front panels and oven sides 0.9mm 304 stainless steel
- 150mm legs in 63mm dia. heavy-duty 1.2mm 304 stainless steel with adjustable feet

Cooktop

- Cast iron 28MJ/hr open burners with forged brass cap
- Vitreous enamelled cast iron potstands
- Vitreous enamelled open burner spill covers
- Cast iron simmer plates (optional extra)
- 12mm thick mild steel griddle plates
- 2.5mm 304 stainless steel griddle splash guards
- Vitreous enamelled spill trays
- Aluminised steel internal construction

Griddle sections are standard on RH side. Available on LH side or centre to order or by conversion.

Oven

- Fully welded and vitreous enamelled oven liner
- GN 2/1 capacity with 4 position racking
- Heavy-duty easy remove heavy wire chrome rack supports
- Cast iron even heat oven sole plate
- 6.5kW heating elements
- Welded frame drop down door with heavy-duty spring hinge system
- 0.9mm 304 stainless steel door outer
- 1.0mm press formed vitreous enamelled door inner
- 50mm high density fibreglass insulated
- Stay cool stainless steel door handle with cast metal handle mounts
- Supplied with two chrome wire oven racks

Controls

- Large easy use control knob - heat resistant reinforced
- Easy view control settings on knob

Cooktop

- Variable high to low controls to open burners
- Open burners flame failure standard with pilot burners optional
- Variable high to low controls to griddles
- Griddles standard with pilot, flame failure and piezo ignition

Oven

- Separate temperature and top heat power regulation controls
- 50-320°C thermostatic control
- Lo-Hi top heat control
- Indicator lights for power and heating

Cleaning and Servicing

- All models with easy clean stainless steel external finish
- Lift off burners heads and vitreous enamelled burner spill covers
- Vitreous enamelled spill trays under open burner and griddle sections
- Removable oven racking and sole plate
- Easy clean vitreous enamel oven and door inner
- Door hinge spring adjustable on unit (door outer removed)
- Door disengages for lift off removal and increased service access
- All parts front accessible from installed position
- Access to all parts from front of unit

Waldorf 800 SERIES

Technical data sheet for

GAS RANGE ELECTRIC STATIC OVEN 900mm

Specifications

Burners
Open Burners 28MJ/hr dual flame ring with simmer rate
Griddle Burners 20MJ/hr per 300mm section

Oven Elements
4.5kW bottom heat element
2.0kW top heat element

Gas power

RN8610GE	168 MJ/hr, 46.6kW
RN8613GE	132 MJ/hr, 36.6kW
RN8616GE	96 MJ/hr, 26.6kW
RN8619GE	60 MJ/hr, 16.6kW

Electrical requirements
6.5kW
1 phase connection:
230-240Vac, 50/60hz, 1P+N+E, 27A
3 phase connection:
400-415Vac, 50/60hz, 3P+N+E
L1 9.4A
L2 9.4A
L3 8.3A

Griddle Plate
300mm Griddle cooking surface
292mm x 475mm, 1387cm2
600mm Griddle cooking surface
592mm x 475mm, 2812cm2
900mm Griddle cooking surface
892mm x 475mm, 4237cm2

Oven Dimensions
Width 665mm
Depth 590mm
Height 385mm
Rack size 660mm x 540mm
Rack positions 4

Gas connection
R 3/4 (BSP) male
130mm from RH side, 32mm from rear, and 655mm from floor
All units supplied with Natural and LP gas regulator

Electrical connection
23mm from RH side, 484mm from rear, and 150mm from floor

Dimensions
Width 900mm
Depth 805mm
Height 915mm
Incl. splashback 1130mm
Incl. low back 970mm

Nett weight
220kg

Packing data
1.03m3, 285kg
Width 945mm
Depth 870mm
Height 1255mm

Gas types
Available in Natural gas and LP gas
Please specify when ordering
Units supplied complete with gas type conversion kits
Other gas types on request

Options at extra cost
Simmer plates (replaces Potstand)
Ribbed griddle plates
Joining caps
Castors
Plinth mounting

RN8610GE, RN8613GE, RN8616GE, RN8619GE

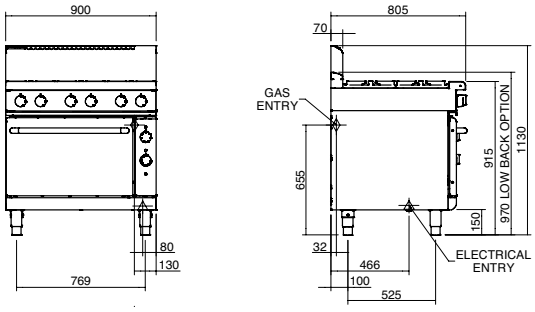

RN8610GE

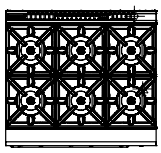

RN8613GE

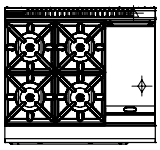

RN8616GE

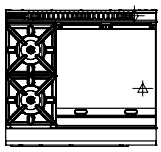

RN8619GE

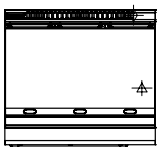

MOFFAT

moffat.com.au
moffat.co.nz

Australia
moffat.com.au

Moffat Pty Limited

Victoria/Tasmania
740 Springvale Road
Mulgrave, Victoria 3170
Telephone +613-9518 3888
Facsimile +613-9518 3833
vsales@moffat.com.au

New South Wales
Telephone +612-8833 4111
nswsales@moffat.com.au

South Australia
Telephone +613-9518 3888
vsales@moffat.com.au

Queensland
Telephone +617-3630 8600
qldsales@moffat.com.au

Western Australia
Telephone +618-9413 2400
wasales@moffat.com.au

New Zealand
moffat.co.nz

Moffat Limited

Rolleston
45 Illinois Drive
Izone Business Hub
Rolleston 7675
Telephone +64 3-983 6600
Facsimile +64 3-983 6660
sales@moffat.co.nz

Auckland
Telephone +64 9-574 3150
sales@moffat.co.nz

24:7 Service Support

ISO9001 Quality Management Standard

Cert. No. 6892

In line with policy to continually develop and improve its products, Moffat Limited reserves the right to change specifications and design without notice.

© Copyright Moffat Ltd

AN.W8.08/19

an Ali Group Company

The Spirit of Excellence