PRODUCT DOCUMENT PACK

Prepared and distributed by KW Commercial Kitchen

PRODUCT

Waldorf Bold RNLB8910G - 900mm Gas Range Static Oven Low Back Version

Model / SKU: RNLB8910G

KW COMMERCIAL KITCHEN

7/72 Canterbury Road, Bankstown NSW 2200

Phone 1300 001 366

Email sales@kwcommercial.com.au

Web www.kwcommercial.com.au

Scan for the current KW product page

DOCUMENT NOTICE

The supplier document begins on the next page. KW contact branding is added in a separate footer area and does not replace the supplier's instructions, specifications or warranty terms.

Official supplier source: https://moffat.global.ssl.fastly.net/sites/default/files/products/specification/RNB8910G_AN.pdf

Waldorf **Bold**

Gas Range Static Oven
900mm - 4 Burner

RNLB8910G

- Heavy-duty construction
- Four 28MJ/hr open burners
- Flame failure standard
- Pilot burners optional
- Optional simmer plates
- GN 2/1 gas static oven
- Drop down door
- Stainless steel exterior
- Black vitreous enamel finish to front panels
- Easy clean
- Easy service
- Fully modular

OVERALL CONSTRUCTION

- Galvanized steel chassis
- Welded hob with 1.5mm stainless steel bull nose
- Splashback and hob sides 1.2mm stainless steel
- Front panels and oven sides 0.9mm stainless steel
- 150mm legs in 63mm dia. heavy-duty 1.2mm stainless steel with adjustable feet

COOKTOP

- Cast iron 28MJ/hr open burners with forged brass cap
- Vitreous enamelled cast iron potstands
- Stainless steel open burner spill covers
- Stainless steel spill tray

OVEN

- Fully welded and vitreous enamelled oven liner
- GN 2/1 capacity with 4 position racking
- Heavy-duty easy remove heavy wire chrome rack supports
- Cast iron even heat oven sole plate
- 30MJ oven burner
- Pilot and flame failure with piezo ignition
- Welded frame drop down door with heavy-duty spring hinge system
- 0.9mm stainless steel door outer
- 1.0mm press formed vitreous enamelled door inner
- High density fibreglass insulated
- Stay cool stainless steel door handle with cast metal handle mounts
- Supplied with two chrome wire oven racks

CONTROLS

- Large easy use control knob - heat resistant reinforced
- Easy view control settings on knob

COOKTOP

- Variable high to low controls to open burners
- Open burners flame failure standard with pilot burners optional

OVEN

- 100-290˚C thermostatic control
- Piezo ignition to pilot burner
- Flame failure

CLEANING AND SERVICING

- All models with easy clean stainless steel external finish
- Lift off burner heads
- Stainless steel drip tray under open burners
- Bottom sill removable for oven burner and pilot access
- Removable oven racking and sole plate
- Easy clean vitreous enamel oven and door inner
- Door hinge spring adjustable on unit (door outer removed)
- Door disengages for lift off removal and increased service access
- Access to all parts from front of unit

Series Options

RNLB - Low back models
RNB - 215mm splashback option

Waldorf Bold

Gas Range Static Oven 900mm - 4 Burner

RNLB8910G

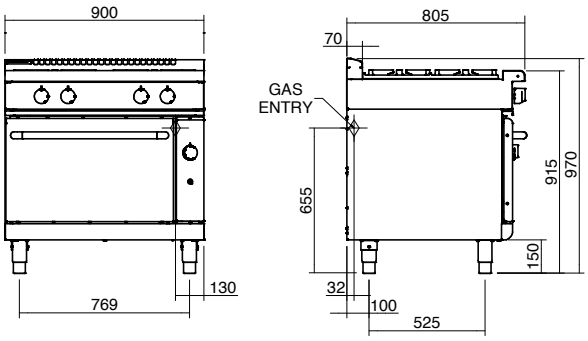

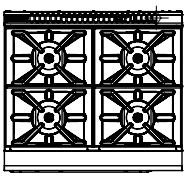

SPECIFICATIONS

Burners

Open Burners 28MJ/hr dual flame ring with simmer rate

Oven 30MJ tubular under cast iron sole plate

Gas power (gross)

142MJ/hr, 40kW

Oven Dimensions

Width 665mm
Depth 590mm
Height 385mm
Rack size 660mm x 540mm
Rack positions 4

Gas connection

R ¾ (BSP) male

Optional underside connection, please specify when ordering

All units supplied with Natural and LP gas regulator

Dimensions

Width 900mm
Depth 805mm
Height 915mm
Incl. low back 970mm
Incl. splashback option 1130mm

Nett weight

215kg

Packing data

1.03m3, 280kg
Width 945mm
Depth 870mm
Height 1255mm

Gas types

Available in Natural gas and LP gas

Please specify when ordering

Units supplied complete with gas type conversion kits

Other gas types on request

OPTIONS AT EXTRA COST

Joining caps
Castors
Plinth mounting

moffat.com.au
moffat.co.nz

Australia
moffat.com.au

Moffat Pty Limited

Victoria/Tasmania
740 Springvale Road
Mulgrave, Victoria 3170
Telephone +613-9518 3888
Facsimile +613-9518 3833
vsales@moffat.com.au

New South Wales
Telephone +612-8833 4111
nswsales@moffat.com.au

South Australia
Telephone -613-9518 3888
vsales@moffat.com.au

Queensland
Telephone +617-3630 8600
qldsales@moffat.com.au

Western Australia
Telephone 618-9413 2400
wasales@moffat.com.au

New Zealand
moffat.co.nz

Moffat Limited

Rolleston
45 Illinois Drive
Izone Business Hub
Rolleston 7675
Telephone +64 3-983 6600
Facsimile +64 3-983 6660
sales@moffat.co.nz

Auckland
Telephone +64 9-574 3150
sales@moffat.co.nz

24:7 Service Support

ISO9001 Quality Management Standard

Designed and manufactured by

ISO9001
All Waldorf Bold products are designed and manufactured by Moffat using the internationally recognised ISO9001 quality management system, covering design, manufacture and final inspection, ensuring consistent high quality at all times.

In line with policy to continually develop and improve its products, Moffat Limited reserves the right to change specifications and design without notice.

© Copyright Moffat Ltd

AN.WBD.S.02.19

an Ali Group Company

The Spirit of Excellence