PRODUCT DOCUMENT PACK

Prepared and distributed by KW Commercial Kitchen

PRODUCT

Waldorf Bold BPLB8080EE BPL8080EE - 900mm Electric Tilting Bratt Pan Low Back Versi

Model / SKU: BPLB8080EE

KW COMMERCIAL KITCHEN

7/72 Canterbury Road, Bankstown NSW 2200

Phone 1300 001 366

Email sales@kwcommercial.com.au

Web www.kwcommercial.com.au

Scan for the current KW product page

DOCUMENT NOTICE

The supplier document begins on the next page. KW contact branding is added in a separate footer area and does not replace the supplier's instructions, specifications or warranty terms.

Official supplier source: https://moffat.global.ssl.fastly.net/sites/default/files/products/cutsheet/BPLB8080E_DS_AN.pdf

Waldorf Bold

Technical data sheet for

Electric Tilting Bratt Pan **900mm**

BPLB8080E, BPLB8080EE

BPLB8080E

BPLB8080E

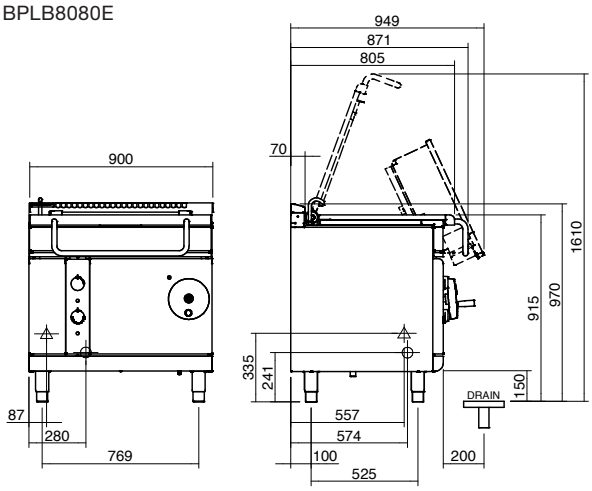

BPLB8080EE

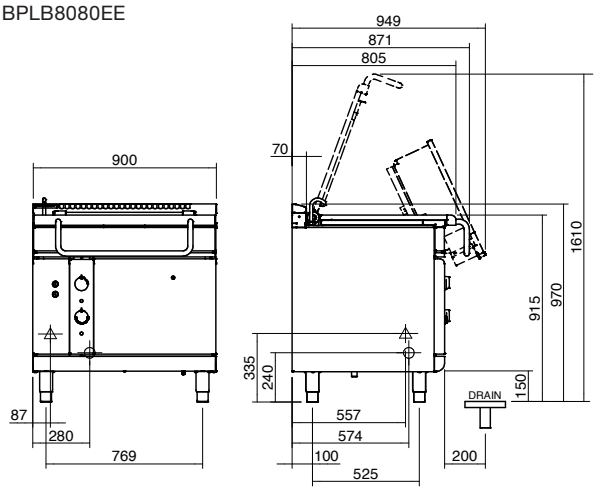

PLAN

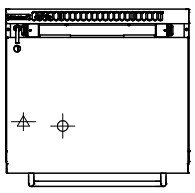

= ELECTRICAL CONNECTION POINT.

= WATER CONNECTION POINT.

SPECIFICATIONS

Elements
3 x 4kw stainless steel sheathed heating elements clad to pan base

Electrical requirements
12kW
400-415Vac, 50/60Hz, 3P+N+E
Phase loading
L1 17A
L2 17A
L3 17A

Pan
Cooking surface 780mm x 450mm, 3510cm2
215mm deep

Water connection
Cold water connection 270mm from side, 574mm from rear, and 252mm from floor
1/2" tube connection via 15mm crox fitting
550kpa, 80psi max water pressure

Electrical connection
60mm from LH side, 405mm from rear,
and 150mm from floor

Dimensions
Width 900mm
Depth 805mm
Height 915mm
Incl. low back 970mm
Incl. splashback option 1130mm
With lid open 1600mm

Nett weight
180kg

Packing data
1.03m3, 245kg
Width 945mm
Depth 870mm
Height 1255mm

OPTIONS AT EXTRA COST
Joining caps
Plinth mounting

Series Options
BPLB - Low back models
BPB - 215mm splashback option

MOFFAT

Australia moffat.com.au
New Zealand moffat.co.nz

In line with policy to continually develop and improve its products, Moffat Limited reserves the right to change specifications and design without notice.

ISO9001 Quality Management Standard

© Copyright Moffat Ltd AN.WB.01.2023

an Ali Group Company

The Spirit of Excellence