PRODUCT DOCUMENT PACK

Prepared and distributed by KW Commercial Kitchen

PRODUCT

Waldorf Bold BPLB8120E - 1200mm Electric Tilting Bratt Pan Low Back Version

Model / SKU: BPLB8120E

KW COMMERCIAL KITCHEN

7/72 Canterbury Road, Bankstown NSW 2200

Phone 1300 001 366

Email sales@kwcommercial.com.au

Web www.kwcommercial.com.au

Scan for the current KW product page

DOCUMENT NOTICE

The supplier document begins on the next page. KW contact branding is added in a separate footer area and does not replace the supplier's instructions, specifications or warranty terms.

Official supplier source: https://moffat.global.ssl.fastly.net/sites/default/files/products/specification/BP8120E_EE_AN.pdf

Technical data sheet for

ELECTRIC TILTING BRATT PAN 1200mm

BP8120E, BP8120EE

BP8120EE

- 120L full stainless steel pan
- Manually operated tilting mechanism
- Optional electric power tilting mechanism
- Heavy-duty lid and hinge system
- Galvanized steel chassis
- Stainless steel exterior
- Easy clean
- Easy service
- Fully modular
- Low back models (BPL) available

Overall Construction

- Heavy-duty galvanized steel chassis
- Splashback and side panels 1.2mm 304 stainless steel
- Front panels 0.9mm 304 stainless steel
- Full stainless steel pan with 2.0mm pan body
- 12mm thick stainless steel even heat pan base
- Large capacity pouring spout
- Heavy-duty spring balanced lid hinge system
- 1.5mm 304 stainless steel lid suitable as bench-top workspace
- Full width stainless steel lid handle
- Manually operated pan lift handwheel with fold-away handle
- Electrically powered pan tilting option
- 63mm dia. heavy-duty stainless steel legs with adjustable feet

Controls

- Large easy use control knobs - heat resistant reinforced
- Easy view control settings on knobs
- Single control knob for power and heating control
- Indicator lights for power and heating
- Quarter turn water valve control for ease of use
- 50-320°C thermostatic control
- Over temperature safety cut-out
- Fold away handle on manual pan tilt
- Pan up and down switches on electric pan tilt

Cleaning and Servicing

- Seamless full stainless steel pan with rounded corners
- Easy clean stainless steel exterior panels
- Easy connection access via front service panels
- Service friendly lid hinge system
- Access to all parts from front of unit

Technical data sheet for

ELECTRIC TILTING BRATT PAN 1200mm

BP8120E, BP8120EE

Specifications

Elements
3 x 5.66kw stainless steel sheathed heating elements clad to pan base
Electrical requirements
17kW
400-415Vac, 50/60hz, 3P+N+E
Phase loading
L1 23A
L2 23A
L3 23A
Pan
Cooking surface 1080mm x 450mm, 4860cm2
215mm deep
Water connection
Cold water connection 270mm from side, 574mm from rear, and 252mm from floor
½" tube connection via 15mm crox fitting
550kpa, 80psi max water pressure
Electrical connection
60mm from LH side, 405mm from rear, and 150mm from floor

Dimensions

Width 1200mm
Depth 805mm
Height 915mm
Incl. splashback 1130mm
Incl. low back 970mm
With lid open 1600mm

Nett weight

220kg

Packing data

1.36m3, 300kg
Width 1245mm
Depth 870mm
Height 1255mm

Options at extra cost

Joining caps
Plinth mounting

BP8120E

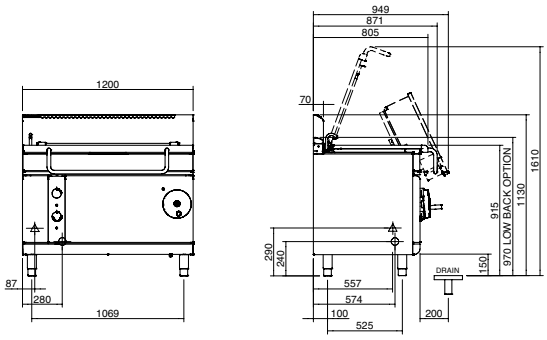

BP8120EE

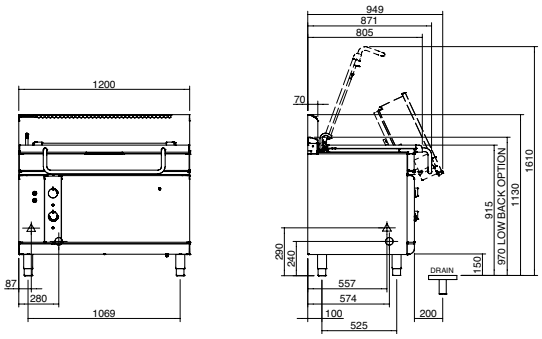

Plan

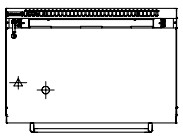

= ELECTRICAL CONNECTION POINT.
= WATER CONNECTION POINT.

moffat.com.au
moffat.co.nz

Australia
moffat.com.au

Moffat Pty Limited

Victoria/Tasmania
740 Springvale Road
Mulgrave, Victoria 3170
Telephone +613-9518 3888
Facsimile +613-9518 3833
vsales@moffat.com.au

New South Wales
Telephone +612-8833 4111
nswsales@moffat.com.au

South Australia
Telephone +613-9518 3888
vsales@moffat.com.au

Queensland
Telephone +617-3630 8600
qldsales@moffat.com.au

Western Australia
Telephone +618-9413 2400
wasales@moffat.com.au

New Zealand
moffat.co.nz

Moffat Limited

Rolleston
45 Illinois Drive
Izone Business Hub
Rolleston 7675
Telephone +64 3-983 6600
Facsimile +64 3-983 6660
sales@moffat.co.nz

Auckland
Telephone +64 9-574 3150
sales@moffat.co.nz

24:7 Service Support

ISO9001 Quality Management Standard

In line with policy to continually develop and improve its products, Moffat Limited reserves the right to change specifications and design without notice.

© Copyright Moffat Ltd

AN.W8.08/19

an Ali Group Company

The Spirit of Excellence