PRODUCT DOCUMENT PACK

Prepared and distributed by KW Commercial Kitchen

PRODUCT

Waldorf 800 Series RN8450G-CB - 450mm Gas Cooktop – Cabinet Base

Model / SKU: RN8450G-CB

KW COMMERCIAL KITCHEN

7/72 Canterbury Road, Bankstown NSW 2200

Phone 1300 001 366

Email sales@kwcommercial.com.au

Web www.kwcommercial.com.au

Scan for the current KW product page

DOCUMENT NOTICE

The supplier document begins on the next page. KW contact branding is added in a separate footer area and does not replace the supplier's instructions, specifications or warranty terms.

Official supplier source: https://moffat.global.ssl.fastly.net/sites/default/files/products/specification/RN8450G_AN.pdf

Technical data sheet for

GAS COOKTOPS 450mm

RN8450G-CB, RN8450G-LS

RN8450G-CB

- Heavy-duty construction
- Two 28MJ/hr open burners
- Flame failure standard
- Pilot burners optional
- 3 models of base unit
- Stainless steel exterior
- Easy clean
- Easy service
- Fully modular
- Low back model (RNL) available

Overall Construction

Cooktop

- Welded hob with 1.5mm stainless steel bull nose
- Splashback and side panels 1.2mm stainless steel
- Front panels 0.9mm stainless steel
- Cast iron 28MJ/hr open burners with forged brass cap
- Vitreous enamelled cast iron potstands
- Open burner spill covers
- Stainless steel spill trays

Cabinet base (supplied as –CB model)

- Fully modular for match suite finish
- Double skin 0.9mm stainless steel interior and exterior
- Optional GN 1/1 4 position racking kit
- 63mm dia. heavy-duty 1.2mm stainless steel legs with adjustable feet

Leg stand (supplied as –LS model)

- Fully modular for matched suite finish
- Framed top for connection to Cooktop
- 63mm dia. heavy-duty 1.2mm stainless steel legs with adjustable feet
- Fully modular framed stand shelf with 0.9mm stainless steel finish
- Suitable for rear or through shelf gas connection to Cooktop
- Quick assembly design

Controls

- Variable high to low controls to open burners
- Open burners flame failure standard with pilot burners optional
- Large easy use control knob - heat resistant reinforced
- Easy view control settings on knob

Cleaning and Servicing

- All models with easy clean stainless steel external finish
- Lift off burner heads and vitreous enamelled burner spill covers
- Stainless steel spill tray under open burner
- Access to all parts from front of unit

Technical data sheet for

GAS COOKTOPS 450mm

Waldorf 800 SERIES

Specifications

Burners
Open Burners 28MJ/hr dual flame ring with simmer rate
Griddle Burners 20MJ/hr
Gas power
56MJ/hr, 15.5kW
Gas connection
R 3/4 (BSP) male
Optional underside connection, please specify when ordering
All units supplied with Natural and LP gas regulator

Dimensions

Bench models
Width 450mm
Depth 805mm
Height 315mm
Incl. splashback 530mm
Incl. low back 370mm
All models (excluding Bench models)
Width 450mm
Depth 805mm
Height 915mm
Incl. splashback 1130mm
Incl. low back 970mm

Nett Weight

Bench and Leg Stand models
86kg
Cabinet Base models
58kg

Packing data

Bench and Leg Stand models
0.29m3, 120kg
Width 495mm
Depth 870mm
Height 665mm
Cabinet Base models
0.54m3, 108kg
Width 495mm
Depth 870mm
Height 1255mm

Gas types

Available in Natural gas and LP gas, please specify when ordering
Units supplied complete with gas type conversion kits
Other gas types on request

Options at extra cost

Joining caps
Castors
Plinth mounting

RN8450G-B

Bench Model

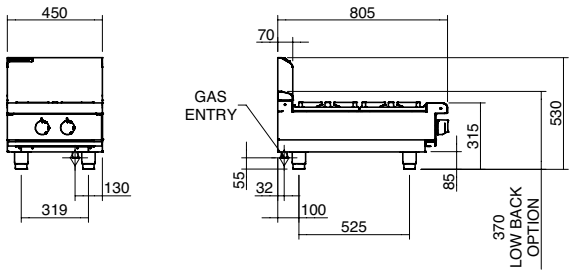

RN8450G-CB

Cabinet Base

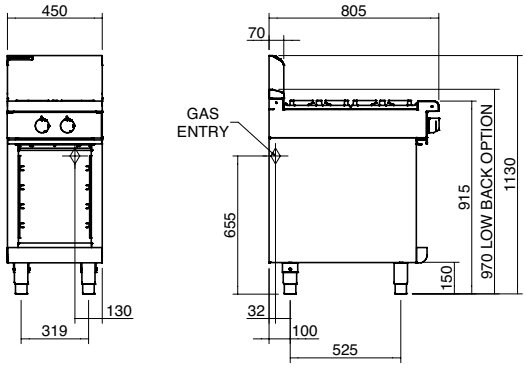

RN8450G-LS

Leg Stand

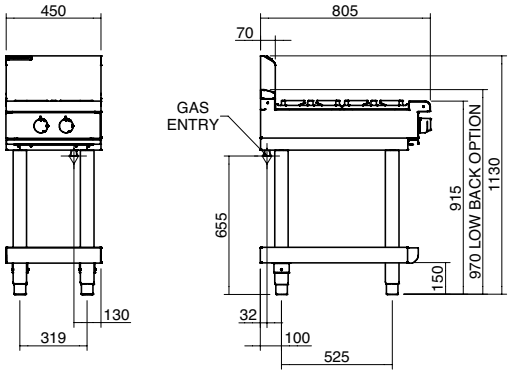

RN8450G

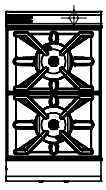

MOFFAT

moffat.com.au
moffat.co.nz

Australia
moffat.com.au

Moffat Pty Limited

Victoria/Tasmania
740 Springvale Road
Mulgrave, Victoria 3170
Telephone +613-9518 3888
Facsimile +613-9518 3833
vsales@moffat.com.au

New South Wales
Telephone +612-8833 4111
nswsales@moffat.com.au

South Australia
Telephone +613-9518 3888
vsales@moffat.com.au

Queensland
Telephone +617-3630 8600
qldsales@moffat.com.au

Western Australia
Telephone +618-9413 2400
wasales@moffat.com.au

New Zealand
moffat.co.nz

Moffat Limited

Rolleston
45 Illinois Drive
Izone Business Hub
Rolleston 7675
Telephone +64 3-983 6600
Facsimile +64 3-983 6660
sales@moffat.co.nz

Auckland
Telephone +64 9-574 3150
sales@moffat.co.nz

24:7 Service Support

ISO9001 Quality Management Standard

Cert. No. 6902

In line with policy to continually develop and improve its products, Moffat Limited reserves the right to change specifications and design without notice.

© Copyright Moffat Ltd

AN.W8.08/19

an Ali Group Company

The Spirit of Excellence