PRODUCT DOCUMENT PACK

Prepared and distributed by KW Commercial Kitchen

PRODUCT

Waldorf 800 Series GPL8600G-B - 600mm Gas Griddle Low Back Version – Bench Model

Model / SKU: GPL8600G-B

KW COMMERCIAL KITCHEN

7/72 Canterbury Road, Bankstown NSW 2200

Phone 1300 001 366

Email sales@kwcommercial.com.au

Web www.kwcommercial.com.au

Scan for the current KW product page

DOCUMENT NOTICE

The supplier document begins on the next page. KW contact branding is added in a separate footer area and does not replace the supplier's instructions, specifications or warranty terms.

Official supplier source: https://moffat.global.ssl.fastly.net/sites/default/files/products/specification/GP8600G-B_CB_LS_AN.pdf

Technical data sheet for

GAS GRIDDLE 600mm

GP8600G-B, GP8600G-CB, GP8600G-LS

GP8600G-LS

- Heavy-duty thermostatic gas griddle
- 20mm thick griddle plate
- Ribbed plate options
- Chromed mirror plate options
- Top weld sealed plates
- 53MJ thermostatic burner system
- 3 models of base unit
- Stainless steel exterior
- Easy clean
- Easy service
- Fully modular
- Low back models (GPL) available

Overall Construction

Griddle

- 20mm thick machined top plates standard
- Optional ribbed plate sections
- Optional mirror finish hard chrome plates
- 2.5mm thick 304 stainless steel splash guards sides and rear
- 2.0mm thick grease channel
- 53MJ single 4 bar even heat burner with single thermostatic control
- Full pilot and flame failure protection with piezo ignition
- Welded hob surround with 1.5mm 304 stainless steel bull nose
- Splashback and side panels 1.2mm 304 stainless steel
- Front panels 0.9mm 304 stainless steel
- Stainless steel grease drawer
- Overlapping finish at front and rear of plate for easy clean

Bench mount (supplied as –B model)

- Four 63mm dia. heavy-duty 1.2mm 304 stainless steel bench legs with adjustable feet
- Adjustable height 80mm – 105mm

Cabinet base (supplied as –CB model)

- Fully modular for match suite finish
- Double skin 0.9mm 304 stainless steel interior and exterior
- Optional GN 1/1 4 position racking kit (1 or 2 cabinet bays)
- 63mm dia. heavy-duty 1.2mm 304 stainless steel legs with adjustable feet

Leg stand (supplied as –LS model)

- Fully modular for matched suite finish
- Framed top for connection to Griddle
- 63mm dia. heavy-duty 1.2mm 304 stainless steel legs with adjustable feet
- Fully modular framed stand shelf with 0.9mm 304 stainless steel finish
- Suitable for rear or through shelf gas connection to Griddle
- Quick assembly design (no tools required)

Controls

- 90-300˚C thermostat
- Large easy use control knob - heat resistant reinforced
- Easy view control settings on knob
- Flame failure pilot burner
- Piezo ignition to pilot burner

Cleaning and Servicing

- All models with easy clean stainless steel external finish
- Plate is finished front and rear with overlap construction to remove cleaning traps
- Control service and gas conversion through front of unit
- Burner service requires plate removal

Technical data sheet for

GAS GRIDDLE 600mm

Specifications

Burner

4 bar Chromed steel burner with pilot, flame failure and piezo ignition

Gas power

53MJ/hr, 14.7kW

Plate

Cooking surface 592mm x 530mm, 3138cm2

Gas connection

R ³/₄ (BSP) male

130mm from RH side, 35mm from rear, and 655mm from floor

All units supplied with Natural and LP gas regulator

Dimensions

Bench models

Width 600mm

Depth 805mm

Height 315mm

Incl. splashback 530mm

Incl. low back 370mm

All models (excluding Bench model)

Width 600mm

Depth 805mm

Height 915mm

Incl. splashback 1130mm

Incl. low back 970mm

Nett weight

Bench and Leg Stand models

108kg

Cabinet Base models

133kg

Packing data

Bench models

0.37m3, 160kg

Width 645mm

Depth 870mm

Height 665mm

All models (excluding Bench model)

0.70m3, 185kg

Width 645mm

Depth 870mm

Height 1255mm

Gas types

Available in Natural gas and LP gas

Please specify when ordering

Units supplied complete with gas type conversion kits

Other gas types on request

Options at extra cost

Joining caps

Castors

Plinth mounting

Ribbed plate options

Chrome plate options

GP8600G-B
Bench Model

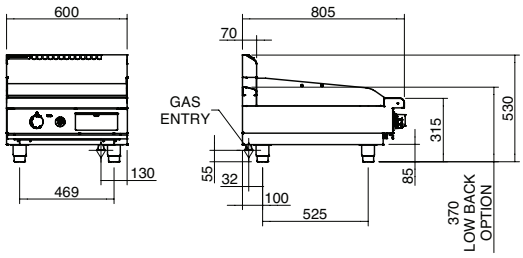

GP8600G-CB
Cabinet Base

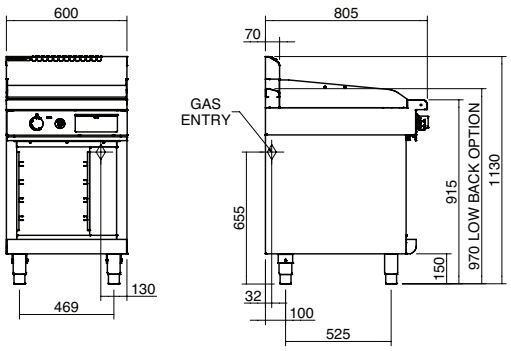

GP8600G-LS
Leg Stand

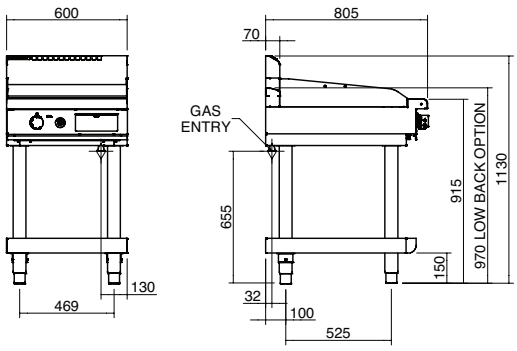

Plan

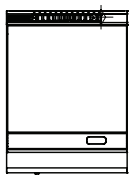

moffat.com.au
moffat.co.nz

Australia

Moffat Pty Limited

Victoria/Tasmania
740 Springvale Road
Mulgrave, Victoria 3170
Telephone +613-9518 3888
Facsimile +613-9518 3833
vsales@moffat.com.au

New South Wales
Telephone +612-8833 4111
nswsales@moffat.com.au

South Australia
Telephone +613-9518 3888
vsales@moffat.com.au

Queensland
Telephone +617-3630 8600
qldsales@moffat.com.au

Western Australia
Telephone +618-9413 2400
wasales@moffat.com.au

New Zealand

Moffat Limited

Rolleston
45 Illinois Drive
Izone Business Hub
Rolleston 7675
Telephone +64 3-983 6600
Facsimile +64 3-983 6660
sales@moffat.co.nz

Auckland
Telephone +64 9-574 3150
sales@moffat.co.nz

24:7 Service Support

ISO9001 Quality Management Standard

Designed and manufactured by

ISO9001
All Waldorf800 products are designed and manufactured by Moffat using the internationally recognised ISO9001 quality management system, covering design, manufacture and final inspection, ensuring consistent high quality at all times.

In line with policy to continually develop and improve its products, Moffat Limited reserves the right to change specifications and design without notice.

Cert. No. 6898

© Copyright Moffat Ltd

AN.W8.09/19

an Ali Group Company

The Spirit of Excellence