PRODUCT DOCUMENT PACK

Prepared and distributed by KW Commercial Kitchen

PRODUCT

Waldorf 800 Series GPL8900G-CB - 900mm Gas Griddle Low Back Version – Cabinet Base

Model / SKU: GPL8900G-CB

KW COMMERCIAL KITCHEN

7/72 Canterbury Road, Bankstown NSW 2200

Phone 1300 001 366

Email sales@kwcommercial.com.au

Web www.kwcommercial.com.au

Scan for the current KW product page

DOCUMENT NOTICE

The supplier document begins on the next page. KW contact branding is added in a separate footer area and does not replace the supplier's instructions, specifications or warranty terms.

Official supplier source: https://moffat.global.ssl.fastly.net/sites/default/files/products/specification/GP8900G_an.pdf

Technical data sheet for

GAS GRIDDLE 900mm

GP8900G-B, GP8900G-CB, GP8900G-LS, GP8900G-RB

GP8900G-LS

- Heavy-duty thermostatic gas griddle
- 20mm thick griddle plate
- Ribbed plate options
- Chromed mirror plate options
- Top weld sealed plates
- 80MJ thermostatic burner system
- Separate left and right heat zones
- 3 models of base unit
- 1 model of refrigerated base with two GN 1/1 drawers
- Stainless steel exterior
- Easy clean
- Easy service
- Fully modular
- Low back models (GPL) available

Overall Construction

Griddle

- 20mm thick machined top plates standard
- Optional ribbed plate sections
- Optional mirror finish hard chrome plates
- 2.5mm thick 304 stainless steel splash guards sides and rear
- 2.0mm thick grease channel
- Two 40MJ 3 bar even heat burners with dual thermostatic controls
- Full pilot and flame failure protection with piezo ignition
- Welded hob surround with 1.5mm 304 stainless steel bull nose
- Splashback and side panels 1.2mm 304 stainless steel
- Front panels 0.9mm 304 stainless steel
- Stainless steel grease drawer
- Overlapping finish at front and rear of plate for easy clean

Bench mount (supplied as –B model)

- Four 63mm dia. heavy-duty 1.2mm 304 stainless steel bench legs with adjustable feet
- Adjustable height 80mm – 105mm

Cabinet base (supplied as –CB model)

- Fully modular for match suite finish
- Double skin 0.9mm 304 stainless steel interior and exterior
- Optional GN 1/1 4 position racking kit (1 or 2 cabinet bays)
- Up to eight 65mm GN 1/1 capacity
- 63mm dia. heavy-duty 1.2mm 304 stainless steel legs with adjustable feet

Leg Stand (supplied as –LS model)

- Fully modular for matched suite finish
- Framed top for connection to Griddle
- 63mm dia. heavy-duty 1.2mm 304 stainless steel legs with adjustable feet
- Fully modular framed stand shelf with 0.9mm 304 stainless steel finish
- Suitable for rear or through shelf gas connection to Griddle
- Quick assembly design (no tools required)

Refrigerated base (supplied as –RB model)

- Self contained suite matched modular base
- Ventilated system with R134a refrigerant
- -2˚ to + 8˚C temperature (Tropical Climate rated)
- Two GN 1/1 drawers
- 100mm deep pan capacity
- Heavy-duty European telescopic drawer guides
- Magnetic drawer gaskets (replaceable without tools)
- 50mm fully foamed CFC free insulation
- 304 stainless steel exterior and interior
- Anti-corrosion treated evaporator
- No condensate drain required
- 63mm dia. heavy-duty 1.2mm 304 stainless steel legs with adjustable feet
- Condensing unit removable through front of unit for service
- Easy clean interior

Controls

Griddle

- Separate left and right side heat zones
- Two 90-300˚C thermostats
- Large easy use control knobs - heat resistant reinforced
- Easy view control settings on knobs
- Flame failure pilot burners
- Piezo ignition to each pilot burner

Refrigerated base

- Digital control electronic thermostat
- Automatic defrost
- Automatic evaporation of defrost water
- -2 to +8˚C temperature range

Cleaning and Servicing

- All models with easy clean stainless steel external finish
- Plate is finished front and rear with overlap construction to remove cleaning traps
- Control service and gas conversion through front of unit
- Burner service requires plate removal
- Refrigerated Base condenser removable through front of unit

Technical data sheet for

GAS GRIDDLE 900mm

Specifications

Griddle

Burner
Two 3 bar chromed steel burners
Individual pilot, flame failure and piezo ignition
Gas power
80MJ/hr, 22.2kW
Plate
Cooking surface 892mm x 530mm, 4728cm2
Gas connection
R ¾ (BSP) male
130mm from RH side, 32mm from rear, and 655mm from floor
All units supplied with Natural and LP gas regulator

Refrigerated base

Type
Ventilated system
Refrigerant
R134a (160grams)
Climate classification
T – tropical
Electrical connection
220-240Vac, 50Hz, 1.8A, 1P+N+E
3 pin 10A plug cordset fitted

Dimensions

Bench models
Width 900mm
Depth 805mm
Height 315mm
Incl. splashback 530mm
Incl. low back 370mm
All models (excluding Bench model)
Width 900mm
Depth 805mm
Height 915mm
Incl. splashback 1130mm
Incl. low back 970mm

Nett weight

Bench and Leg Stand models
157kg
Cabinet Base and Refrigerated Base models
200kg

Packing data

Bench models
0.55m3, 222kg
Width 945mm
Depth 870mm
Height 665mm
All models (excluding Bench model)
1.03m3, 265kg
Width 945mm
Depth 870mm
Height 1255mm

Gas types

Available in Natural gas and LP gas
Please specify when ordering
Units supplied complete with gas type conversion kits
Other gas types on request

Options at extra cost

Joining caps
Castors
Plinth mounting
Ribbed plate options
Chrome plate options

GP8900G-B Bench Model

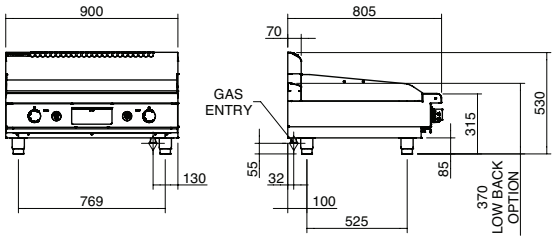

GP8900G-CB Cabinet Base

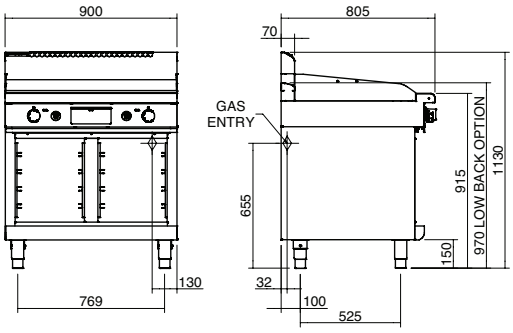

GP8900G-LS Leg Stand

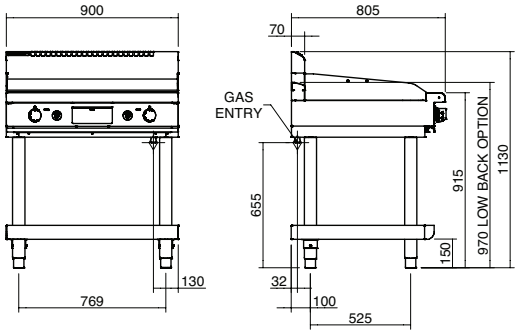

GP8900G-RB Refrigerated Base

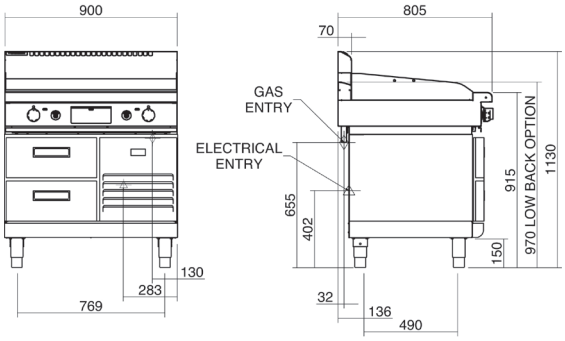

Plan

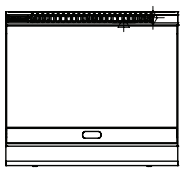

moffat.com.au
moffat.co.nz

Australia

Moffat Pty Limited

Victoria/Tasmania
740 Springvale Road
Mulgrave, Victoria 3170
Telephone +613-9518 3888
Facsimile +613-9518 3833
vsales@moffat.com.au

New South Wales
Telephone +612-8833 4111
nswsales@moffat.com.au

South Australia
Telephone +613-9518 3888
vsales@moffat.com.au

Queensland
Telephone +617-3630 8600
qldsales@moffat.com.au

Western Australia
Telephone +618-9413 2400
wasales@moffat.com.au

New Zealand

Moffat Limited

Rolleston
45 Illinois Drive
Izone Business Hub
Rolleston 7675
Telephone +64 3-983 6600
Facsimile +64 3-983 6660
sales@moffat.co.nz

Auckland
Telephone +64 9-574 3150
sales@moffat.co.nz

24:7 Service Support

ISO9001 Quality Management Standard

Designed and manufactured by

ISO9001
All Waldorf800 products are designed and manufactured by Moffat using the internationally recognised ISO9001 quality management system, covering design, manufacture and final inspection, ensuring consistent high quality at all times.

In line with policy to continually develop and improve its products, Moffat Limited reserves the right to change specifications and design without notice.

Cert. No. 6898

© Copyright Moffat Ltd

AN.W8.01.2020

an Ali Group Company

The Spirit of Excellence