PRODUCT DOCUMENT PACK

Prepared and distributed by KW Commercial Kitchen

PRODUCT

# Waldorf 800 Series CH8300G-B - 300mm Gas Chargrill - Bench Model

## Model / SKU: CH8300G-B


**KW COMMERCIAL KITCHEN**

7/72 Canterbury Road, Bankstown NSW 2200

Phone 1300 001 366

Email sales@kwcommercial.com.au

Web www.kwcommercial.com.au


Scan for the current KW product page

**DOCUMENT NOTICE**

The supplier document begins on the next page. KW contact branding is added in a separate footer area and does not replace the supplier's instructions, specifications or warranty terms.


Official supplier source: https://moffat.global.ssl.fastly.net/sites/default/files/products/manual/Waldorf_CHX8300_8450_8600_8900_8120G_22

Waldorf®
800 SERIES

Installation and Operation Manual

# Chargrill

| | |
|---|---|
| CH8300G | CHL8300G |
| CH8450G | CHL8450G |
| CH8600G | CHL8600G |
| CH8900G | CHL8900G |
| CH8120G | CHL8120G |

| | |
|---|---|
| CHB8300G | CHLB8300G |
| CHB8450G | CHLB8450G |
| CHB8600G | CHLB8600G |
| CHB8900G | CHLB8900G |
| CHB8120G | CHLB8120G |

Date Purchased

Serial Number

Dealer

Service Provider

For use in GB, IE & DK

228592-39

KW COMMERCIAL KITCHEN
Distributed by KW Commercial Kitchen | 1300 001 366
www.kwcommercial.com.au | sales@kwcommercial.com.au

## MANUFACTURED BY

**Moffat Limited**
Rolleston 7675
New Zealand

## INTERNATIONAL CONTACTS

**AUSTRALIA**

**Moffat Pty Limited**

| | |
|---|---|
| **Web:** | www.moffat.com.au |
| **E.Mail:** | vsales@moffat.com.au |
| **Main Office:** | (tel) +61 (03) 9518 3888 |
| | (fax) +61 (03) 9518 3833 |
| **Service:** | (tel): 1800 622 216 |
| **Spares:** | (tel): 1800 337 963 |
| **Customer Service:** | (tel): 1800 335 315 |
| | (fax): 1800 350 281 |

**CANADA**

**Serve Canada**

| | |
|---|---|
| **Web:** | www.servecanada.com |
| **E.Mail:** | info@servecanada.com |
| **Sales:** | (tel): 800 551 8795 (Toll Free) |
| **Service:** | (tel): 800 263 1455 (Toll Free) |

**NEW ZEALAND**

**Moffat Limited**

| | |
|---|---|
| **Web**: | www.moffat.co.nz |
| **E.Mail:** | sales@moffat.co.nz |
| **Main Office:** | (tel): 0800 663328 |

**UNITED KINGDOM**

**Blue Seal**

| | |
|---|---|
| **Web:** | www.blue-seal.co.uk |
| **E.Mail:** | sales@blue-seal.co.uk |
| **Sales:** | (tel): +44 121 327 5575 |
| | (fax): +44 121 327 9711 |
| **Spares:** | (tel): +44 121 322 6640 |
| | (fax): +44 121 327 9201 |
| **Service:** | (tel): +44 121 322 6644 |
| | (fax): +44 121 327 6257 |

**UNITED STATES**

**Moffat**

| | |
|---|---|
| **Web:** | www.moffat.com |
| **Sales:** | (tel): 1-800 551 8795 (Toll Free) |
| | (tel): 336 661 1556 |
| | (fax): 336 661 9546 |
| **Service:** | (tel): 866 673 7937 (Toll Free) |

**REST OF WORLD**

**Moffat Limited**

| | |
|---|---|
| **Web**: | www.moffat.co.nz |
| **E.Mail:** | export@moffat.co.nz |


The reproduction or copying of any part of this manual by any means whatsoever is strictly forbidden unless authorized previously in writing by the manufacturer.

In line with policy to continually develop and improve its products, Moffat Ltd. reserves the right to change the specifications and design without prior notice.

© Copyright Moffat Ltd. March 2017.

# Contents

| | | |
|---|---|---|
| **CH**(L)**8300G-**(B) | **Gas Chargrill,** | **300mm wide - Bench Model Only.** |
| **CH**(L)**8450G-**(B) | **Gas Chargrill,** | **450mm wide.** |
| **CH**(L)**8600G-**(B) | **Gas Chargrill,** | **600mm wide.** |
| **CH**(L)**8900G-**(B) | **Gas Chargrill,** | **900mm wide.** |
| **CH**(L)**8120G-**(B) | **Gas Chargrill,** | **1200mm wide.** |


**Introduction** ..... **2**

**Specification** ..... **3**
- Model Numbers Covered in this Specification
- Gas Supply Requirements

**Dimensions** ..... **5**

**Installation** ..... **8**
- Installation Requirements
- Unpacking
- Location
- Clearances
- Assembly
- Fitting Adjustable Feet / Rear Rollers to Leg Stand Units
- Gas Connection
- Commissioning

**Operation** ..... **13**
- Operation Guide
- Description of Controls
- Lighting Pilot Burners
- Lighting Main Burners
- Griddle Plate Fitting
- Chargrill Grate Reversal

**Cleaning and Maintenance** ..... **16**
- General
- Daily Cleaning
- Weekly Cleaning
- Periodic Maintenance

**Fault Finding** ..... **19**

**Gas Conversion and Specifications** ..... **20**
- Conversion Procedure
- Gas Specifications

**Replacement Parts List** ..... **25**

# Introduction

We are confident that you will be delighted with your WALDORF CHARGRILL, and it will become a most valued appliance in your commercial kitchen.
To ensure you receive the utmost benefit from your new Waldorf CHARGRILL, there are two important things you can do.

**Firstly:**

Please read the instruction book carefully and follow directions given. Time taken will be well spent.

**Secondly:**

If you are unsure of any aspect of installation, instructions or performance of your appliance, contact your WALDORF dealer promptly. In many cases a phone call could answer your question.

**CE Only:**

These instructions are only valid if the country code appears on appliance. If code does not appear on appliance, refer to supplier of this appliance to obtain technical instructions for adapting appliance to conditions for use in that country.

**Warning**

**IMPROPER INSTALLATION, ADJUSTMENT, ALTERATION, SERVICE OR MAINTENANCE CAN CAUSE PROPERTY DAMAGE, INJURY OR DEATH. READ THE INSTALLATION, OPERATING AND MAINTENANCE INSTRUCTIONS THOROUGHLY BEFORE INSTALLING OR SERVICING THIS APPLIANCE.**

**Warning**

**INSTRUCTIONS TO BE FOLLOWED IN THE EVENT THE USER SMELLS GAS ARE TO BE POSTED IN A PROMINENT LOCATION. THIS INFORMATION SHALL BE OBTAINED BY CONSULTING THE LOCAL GAS SUPPLIER.**

**Warning**

**GREAT CARE MUST BE TAKEN BY THE OPERATOR TO USE THE EQUIPMENT SAFELY TO GUARD IT AGAINST RISK OF FIRE.**

- **APPLIANCE MUST NOT BE LEFT ON UNATTENDED.**
- **IT IS RECOMMENDED THAT A REGULAR INSPECTION IS MADE BY A COMPETENT SERVICE PERSON TO ENSURE CORRECT AND SAFE OPERATION OF YOUR APPLIANCE IS MAINTAINED.**
- **DO NOT STORE OR USE GASOLINE OR OTHER FLAMMABLE VAPOURS OR LIQUIDS IN THE VICINITY OF THIS OR ANY OTHER APPLIANCE.**
- **DO NOT SPRAY AEROSOLS IN THE VICINITY OF THIS APPLIANCE WHILE IT IS IN OPERATION.**

**Caution**

- **This appliance is for professional use and is only to be used by qualified persons.**
- **Only authorised service persons are to carry out installation, servicing or gas conversion operations.**
- **Components having adjustments protected (e.g. paint sealed) by the manufacturer should not be adjusted by the user / operator.**
- **DO NOT operate appliance without the legs supplied fitted.**



KW COMMERCIAL KITCHEN
Distributed by KW Commercial Kitchen | 1300 001 366
www.kwcommercial.com.au | sales@kwcommercial.com.au

## Model Numbers Covered in this Specification

| | |
|---|---|
| **CH8300G-** | **Gas Chargrill, 300mm wide.** |
| **CH**[1]**8450G-**[2] | **Gas Chargrill, 450mm wide.** |
| **CH**[1]**8600G-**[2] | **Gas Chargrill, 600mm wide.** |
| **CH**[1]**8900G-**[2] | **Gas Chargrill, 900mm wide.** |
| **CH**[1]**8120G-**[2] | **Gas Chargrill, 1200mm wide.** |

**NOTE:**

**[1]: - Model Options;**

- \- Standard Models.
- L - Low Back Models.
- B - Bold Front.
- LB - Low Back and Bold Front.

**[2] - Base Stand Options;**

- B - Bench Mount.
- CB - Cabinet Base (excluding RN8200G Series).
- LS - Leg Stand (excluding RN8200G Series).
- RB - Refrigerated Base (RN8600G and RN8800G Series only).

## Gas Supply Requirements

### - Australia:

| | Natural Gas | | | | | LP Gas (Propane) | | | | |
|---|---|---|---|---|---|---|---|---|---|---|
| | **CH8300G** | **CH8450G** | **CH8600G** | **CH8900G** | **CH1200G** | **CH8300G** | **CH8450G** | **CH8600G** | **CH8900G** | **CH1200G** |
| **Input Rating (N.H.G.C.)** | 33.0 MJ/hr | 48.0 MJ/hr | 66.0 MJ/hr | 100.0 MJ/hr | 133 MJ/hr | 33.0 MJ/hr | 48.0 MJ/hr | 66.0 MJ/hr | 100.0 MJ/hr | 133 MJ/hr |
| **Supply Pressure** | 1.13 - 3.40 kPa | | | | | 2.75 - 4.50 kPa | | | | |
| **Burner Operating Pressure (*)** | 1.0 kPa | 0.95 kPa | | | | 2.5 kPa | 2.6 kPa | | | |
| **Gas Connection** | $^1/_2$" BSP Male | $^3/_4$" BSP Male | | | | $^1/_2$" BSP Male | $^3/_4$" BSP Male | | | |

### - New Zealand):

| | Natural Gas | | | | | LP Gas | | | | |
|---|---|---|---|---|---|---|---|---|---|---|
| | **CH8300G** | **CH8450G** | **CH8600G** | **CH8900G** | **CH1200G** | **CH8300G** | **CH8450G** | **CH8600G** | **CH8900G** | **CH1200G** |
| **Input Rating (N.H.G.C.)** | 33.0 MJ/hr | 48.0 MJ/hr | 66.0 MJ/hr | 100.0 MJ/hr | 133 MJ/hr | 34.5 MJ/hr | 50.4 MJ/hr | 69.1 MJ/hr | 103.6 MJ/hr | 138.2MJ/hr |
| **Supply Pressure** | 1.13 - 3.40 kPa | | | | | 2.75 - 4.50 kPa | | | | |
| **Burner Operating Pressure (*)** | 1.0 kPa | 0.95 kPa | | | | 2.5 kPa | 2.6 kPa | | | |
| **Gas Connection** | $^1/_2$" BSP Male | $^3/_4$" BSP Male | | | | $^1/_2$" BSP Male | $^3/_4$" BSP Male | | | |

*** - Measure burner operating pressure at the manifold test point with <u>one burner</u> for CH8300G and CH8450G models or <u>two burners</u> for other models operating at full setting. Operating pressure is ex-factory set and not to be adjusted, apart from when converting between gases, if required. (Refer to 'Gas Conversion' section for details).**



KW COMMERCIAL KITCHEN
Distributed by KW Commercial Kitchen | 1300 001 366
www.kwcommercial.com.au | sales@kwcommercial.com.au

# Specifications

## - United Kingdom

Category: **$II_{2H3P}$ (20, 30 / 37).**
Flue Type: **$A_1$.**

| | | Natural Gas (G20) | | | | | Propane (G31) | | | | |
|---|---|---|---|---|---|---|---|---|---|---|---|
| | | CH8300G | CH8450G | CH8600G | CH8900G | CH1200G | CH8300G | CH8450G | CH8600G | CH8900G | CH1200G |
| **Heat Input (nett)** | **Nominal** | 8.8 kW | 13.0 kW | 18.0 kW | 27.0 kW | 36.0 kW | 8.8 kW | 13.0 kW | 18.0 kW | 27.0 kW | 36.0 kW |
| | **Reduced** | 3.5 kW | 4.2 kW | 6.0 kW | 9.0 kW | 18.0 kW | 3.7 kW | 4.3 kW | 6.4 kW | 9.6 kW | 12.8 kW |
| **Gas Rate (nett)** | **Nominal** | 0.93 $m^3$/hr | 1.38 $m^3$/hr | 1.90 $m^3$/hr | 2.86 $m^3$/hr | 3.81 $m^3$/hr | 0.68 kg/hr | 1.01 kg/hr | 1.40 kg/hr | 2.10 kg/hr | 2.80 kg/hr |
| | **Reduced** | 0.37 $m^3$/hr | 0.40 $m^3$/hr | 0.63 $m^3$/hr | 0.95 $m^3$/hr | 1.27 $m^3$/hr | 0.29 kg/hr | 0.33 kg/hr | 0.50 kg/hr | 0.75 kg/hr | 0.99 kg/hr |
| **Supply Pressure** | | 20 mbar | | | | | 30 / 37 mbar | | | | |
| **Burner Operating Pressure (*)** | | 10.6 mbar | 10 mbar | | | | 25 mbar | 26 mbar | | | |
| **Gas Connection** | | $^1/_2$" BSP Male | ¾" BSP Male | | | | $^1/_2$" BSP Male | ¾" BSP Male | | | |

*** - Measure burner operating pressure at the manifold test point with <u>one burner</u> for CH8300G and CH8450G models or <u>two burners</u> for other models operating at full setting. Operating pressure is ex-factory set and not to be adjusted, apart from when converting between gases, if required. (Refer to 'Gas Conversion' section for details).**

## - All Other Markets:

| | Natural Gas | | | | | Town Gas (**) | | | | |
|---|---|---|---|---|---|---|---|---|---|---|
| | CH8300G | CH8450G | CH8600G | CH8900G | CH1200G | CH8300G | CH8450G | CH8600G | CH8900G | CH1200G |
| **Input Rating (N.H.G.C.)** | 33.0 MJ/hr | 48.0 MJ/hr | 66.0 MJ/hr | 100.0 MJ/hr | 133 MJ/hr | 33.0 MJ/hr | 48.0 MJ/hr | 66.0 MJ/hr | 100.0 MJ/hr | 133 MJ/hr |
| **Supply Pressure** | 1.13 - 3.40 kPa | | | | | 0.75 - 1.50kPa | | | | |
| **Burner Operating Pressure (*)** | 1.0 kPa | 0.95 kPa | | | | 0.63kPa | | | | |
| **Gas Connection** | $^1/_2$" BSP Male | $^3/_4$" BSP Male | | | | $^1/_2$" BSP Male | $^3/_4$" BSP Male | | | |

| | LP Gas (Propane) | | | | | Butane | | | | |
|---|---|---|---|---|---|---|---|---|---|---|
| | CH8300G | CH8450G | CH8600G | CH8900G | CH1200G | CH8300G | CH8450G | CH8600G | CH8900G | CH1200G |
| **Input Rating (N.H.G.C.)** | 33.0 MJ/hr | 48.0 MJ/hr | 66.0 MJ/hr | 100.0 MJ/hr | 133 MJ/hr | 33.0 MJ/hr | 48.0 MJ/hr | 66.0 MJ/hr | 100.0 MJ/hr | 133 MJ/hr |
| **Supply Pressure** | 2.75 - 4.50 kPa | | | | | 2.75 - 4.50 kPa | | | | |
| **Burner Operating Pressure (*)** | 2.5 kPa | 2.6 kPa | | | | 2.5 kPa | 2.6 kPa | | | |
| **Gas Connection** | $^1/_2$" BSP Male | $^3/_4$" BSP Male | | | | $^1/_2$" BSP Male | $^3/_4$" BSP Male | | | |

**NOTE:**

- **(*) - Measure burner operating pressure at the manifold test point with <u>one burner</u> for CH8300G and CH8450G Models or <u>two burners</u> for other models, operating at the high setting.**
- **NAT, LPG & Butane Only - Operating pressure is ex-factory set and is not to be adjusted, unless when converting between gases, if required.**
- **(**) - TOWN GAS Only - Adjust burner operating pressure using adjustable gas regulator supplied.**
- **Refer to 'Gas Conversion and Specifications' section in this manual for further details.**



KW COMMERCIAL KITCHEN
Distributed by KW Commercial Kitchen | 1300 001 366
www.kwcommercial.com.au | sales@kwcommercial.com.au

## CH(L)8300G-B

**NOTE: The CH8300G are available in Bench Model (- B) Option Only.**

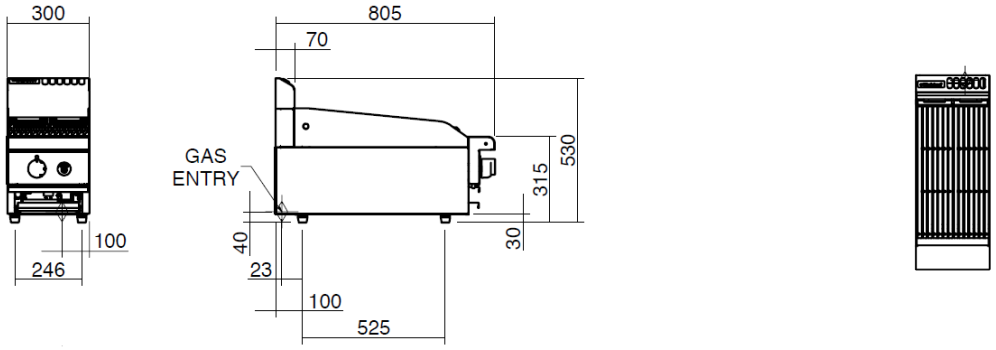


## CH(L)8450G-B

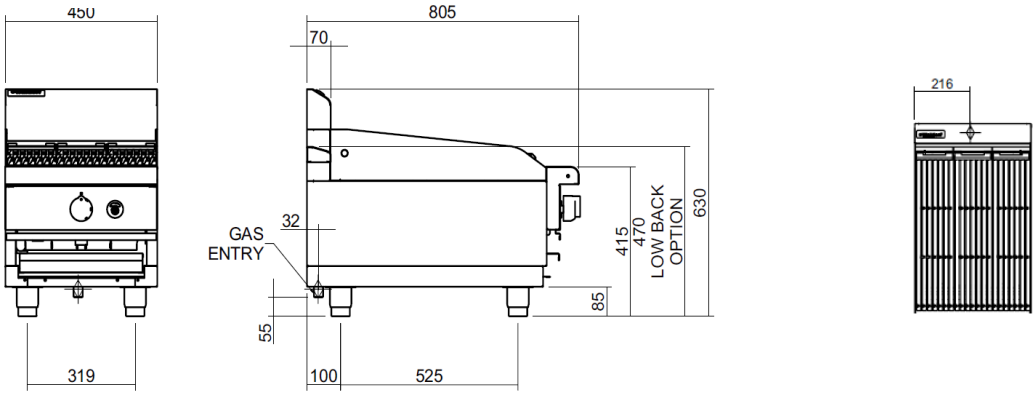


## CH(L)8600G-B

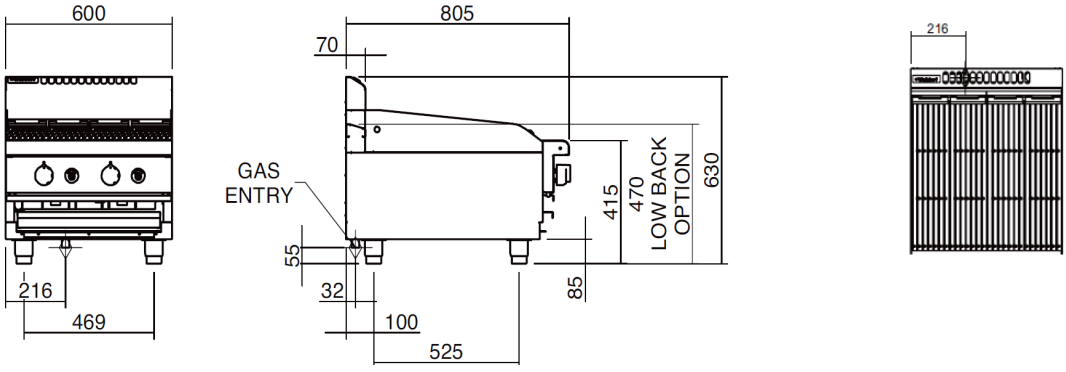


## CH(L)8900G-B

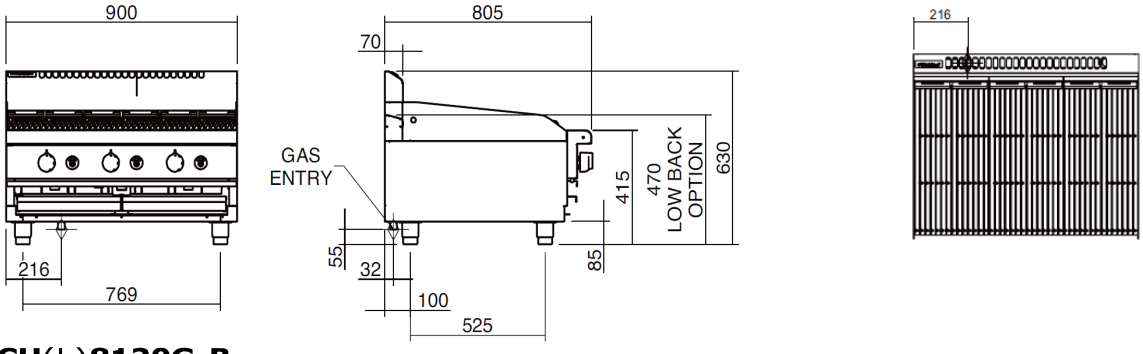


## CH(L)8120G-B

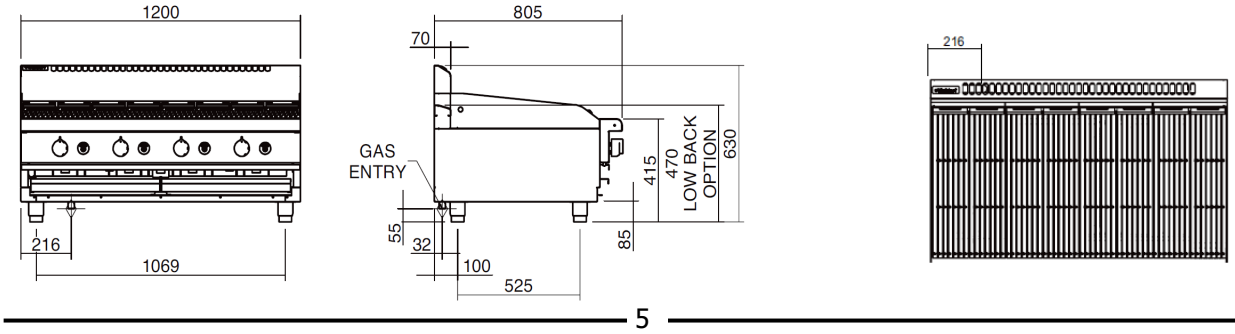




KW COMMERCIAL KITCHEN
Distributed by KW Commercial Kitchen | 1300 001 366
www.kwcommercial.com.au | sales@kwcommercial.com.au

## Dimensions

### CH(L)8450G-

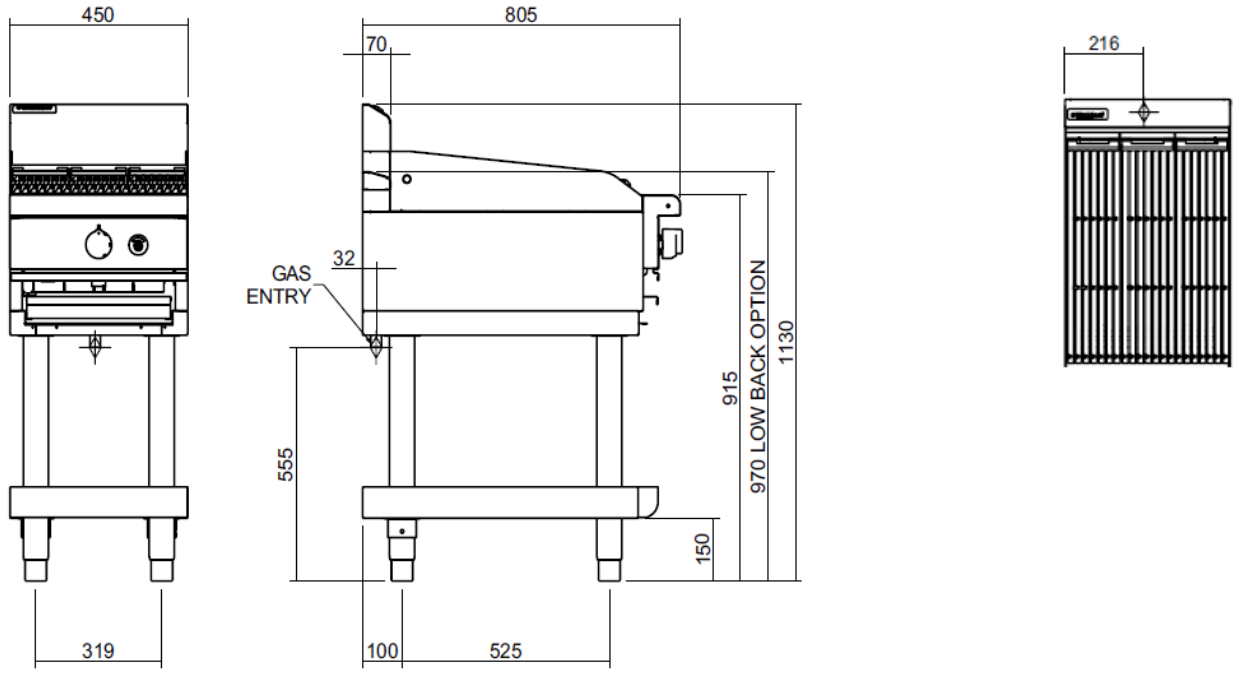


### CH(L)8600G-

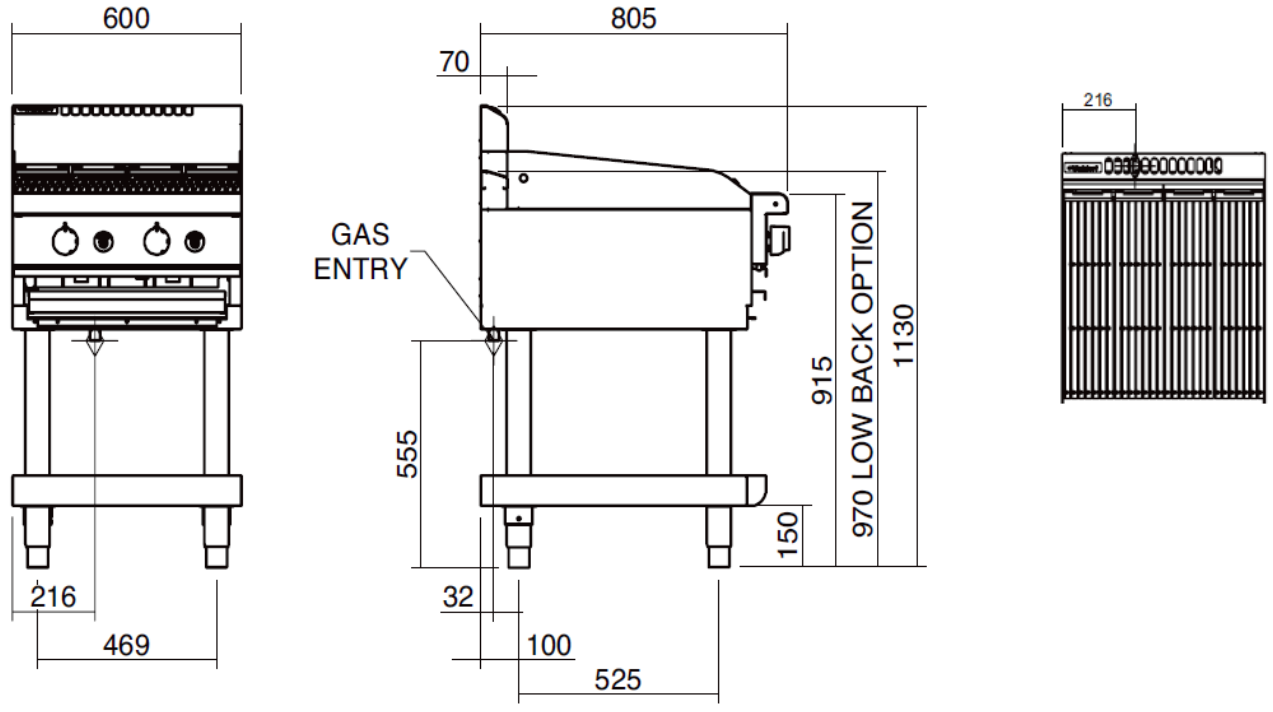




Distributed by KW Commercial Kitchen | 1300 001 366
www.kwcommercial.com.au | sales@kwcommercial.com.au

## CH(L)8900G-

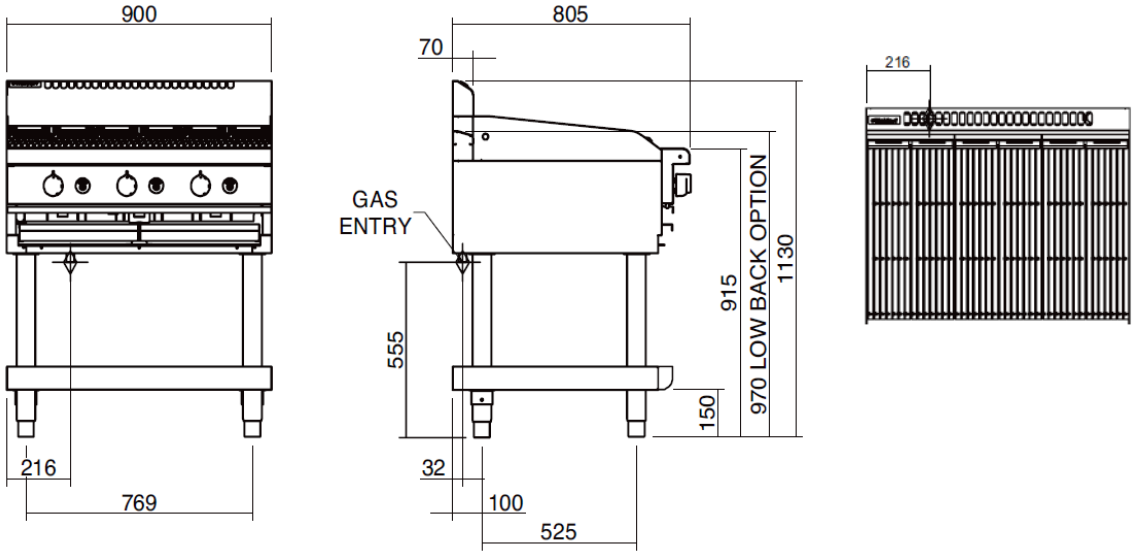


## CH(L)8120G-LS

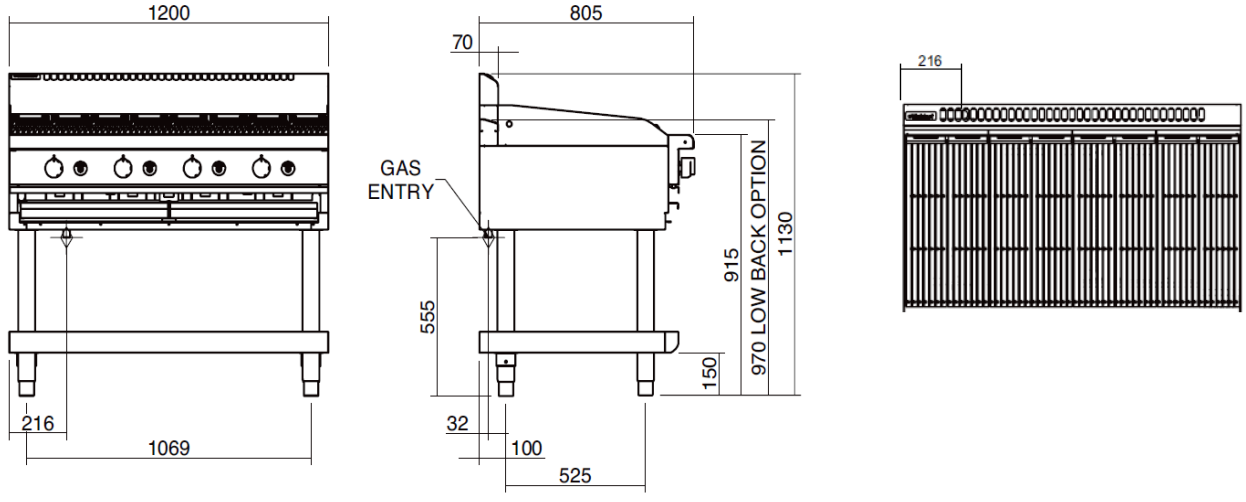




Distributed by KW Commercial Kitchen | 1300 001 366
www.kwcommercial.com.au | sales@kwcommercial.com.au

## Installation Requirements

**NOTE:**

- **It is most important that this appliance is installed correctly and that operation is correct before use. Installation shall comply with local gas, health and safety requirements.**
- **This appliance shall be installed with sufficient ventilation to prevent occurrence of unacceptable concentrations of health harmful substances in the room, the appliance is installed in.**

Waldorf Chargrills are designed to provide years of satisfactory service, and correct installation is essential to achieve the best performance, efficiency and trouble-free operation.
This appliance must be installed in accordance with National Installation Codes and in addition, in accordance with relevant National / Local Codes covering gas and fire safety.

| | |
|---|---|
| **Australia / New Zealand::** | - AS5601.1 - Gas Installations. |
| **United Kingdom:** | - Gas Safety (Installation & Use) Regulations 1998. |
| | - BS6173 - Installation of Catering Appliances. |
| | - BS5440 - 1 & 2 Installation Flueing & Ventilation. |
| **Ireland:** - IS 820 | - Non-Domestic Gas Installations. |

**Installations must be carried out by qualified persons only. Failure to install equipment to the relevant codes and manufacturer's specifications shown in this section will void the warranty. Components having adjustments protected (e.g. paint sealed) by manufacturer are only to be adjusted by an authorised service agent. They are not to be adjusted by the installation person.**

## Unpacking

- Remove all packaging.
- Check equipment and parts for damage. Report any damage immediately to carrier and distributor.
- Remove protective plastic coating from side panels.
- Check that the following parts have been supplied with chargrill:
  1 x Gas Regulator.
  1 x Gas Type Conversion Kit.
- Report any deficiencies to distributor who supplied chargrill.
- Check available gas supply is correct to that shown on rating plate attached to underside of R/H side, front hob lower trim.

## Location

1. This appliance must be installed in a suitably ventilated room to prevent dangerous build up of combustion products.
2. Installation must allow for a sufficient flow of fresh air for combustion air supply. Combustion air requirements are:-

| Combustion Air Requirements | | | | | |
|---|---|---|---|---|---|
| | **CH8300G** | **CH8450G** | **CH8600G** | **CH8900G** | **CH8120G** |
| **Natural Gas (G20)** | $9m^3/hr$ | $14m^3/hr$ | $18m^3/hr$ | $27m^3/hr$ | $36m^3/hr$ |
| **LPG Gas (G30 / G31)** | $9m^3/hr$ | $13m^3/hr$ | $18m^3/hr$ | $26m^3/hr$ | $35m^3/hr$ |

3. Never directly connect a ventilation system to the appliance flue outlet.
4. Position chargrill in its approximate working position.

**NOTE: Do not obstruct or block the appliance flue. Never directly connect a ventilation system to the appliance flue outlet.**



KW COMMERCIAL KITCHEN
Distributed by KW Commercial Kitchen | 1300 001 366
www.kwcommercial.com.au | sales@kwcommercial.com.au

## Clearances

**NOTE: Only non-combustible materials can be used in close proximity to this appliance.**

| | Combustible Surface | Non Combustible Surface |
|---|---|---|
| Left / Right Hand Side | 200mm | 0mm |
| Rear | 150mm | 0mm |

## Assembly

**Bench Models (CH8300G Models Only).**

1. Check all feet are securely fitted.

**Bench Models (CH4500G / CH8600G / CH8900G / CH8120G Models Only)**

1. Check all feet are securely fitted.
2. Adjust feet to make the Chargrill steady and level.

**Leg Stand Models Only**

- **Leg Stand Models will require assembly. Refer to 'Fitting of Adjustable Feet / Rollers to Leg Stand Units' information on the following page for assembly instructions.**
- **Rear leg housings can be fitted with:-**
  a. Adjustable feet to assist with levelling of appliance on uneven floors.
  b. Rear rollers to enable appliance to be easily moved for positioning and cleaning purposes.

**Optional Accessories (Refer to Replacement Parts List)**

- Plinth Kit. For installation details, refer to instructions supplied with each kit.



KW COMMERCIAL KITCHEN
Distributed by KW Commercial Kitchen | 1300 001 366
www.kwcommercial.com.au | sales@kwcommercial.com.au

## Fitting of Adjustable Feet / Rear Rollers to Leg Stand Units.

**Warning**

**TO PREVENT EQUIPMENT DAMAGE AND RISK OF INJURY, REMOVE ALL CHARGRILL CASTINGS, BURNERS AND OTHER REMOVABLE ITEMS PRIOR TO FITTING THE LEG STAND.**

1. Remove grates, griddle plates and radiants from chargrill.
2. Lower chargrill onto it's rear face.
3. Attach four hob legs to leg mounting positions on underside of chargrill. Secure each leg hand tight.
4. Align four round cut out holes on base tray with four hob legs already fitted to chargrill (Ensure that base tray is orientated with sloping edge of base tray facing front of appliance).
5. Slot base tray onto four hob legs and push fully home.
6. Secure base tray to chargrill legs by screwing two front adjustable feet supplied, into base of front chargrill legs. Secure each adjustable foot, hand tight.
7. The two rear leg housings can be fitted with either adjustable legs or rollers. (See Fig 1).

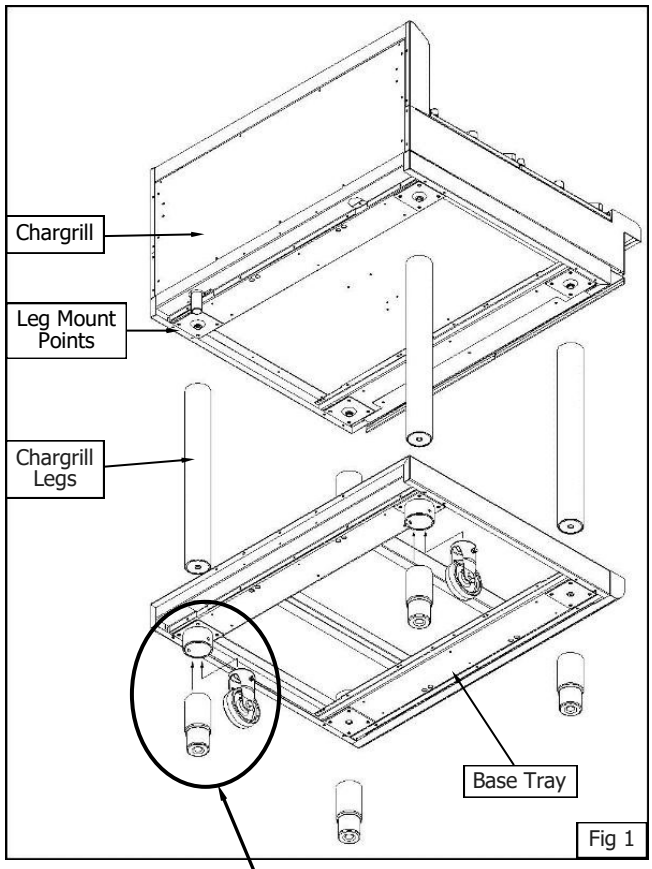

Fig 1

**NOTE:**

- **This appliance is fitted with adjustable feet to enable it to be positioned securely and level. This should be carried out on completion of gas connection. Refer to 'Gas Connection' section overleaf.**
- **This appliance can also be fitted with rear rollers to enable appliance to be easily moved for positioning and cleaning purposes. If desired, these rollers are supplied in the packaging, with the appliance.**

**Rear Adjustable Feet, fitting:-**

a. Secure rear of base tray to rear chargrill legs by screwing two adjustable feet supplied, into base of rear chargrill legs.
b. Secure each adjustable foot, hand tight.

**Rear Rollers, fitting:-**

a. Fit rear leg securing bolts up through centre of rear leg housings to secure rear of base tray to rear chargrill legs and tighten up bolts using a 24mm socket.
b. Fit rear rollers to rear leg supports.
c. Secure rear rollers to rear leg supports using locating bolts supplied.
d. Tighten locating bolts using a 10mm spanner.

8. Lift chargrill back onto its legs / rollers and refit all grates, griddle plates and radiants to chargrill, ensuring they are correctly fitted.
9. Adjust adjustable feet to level appliance.

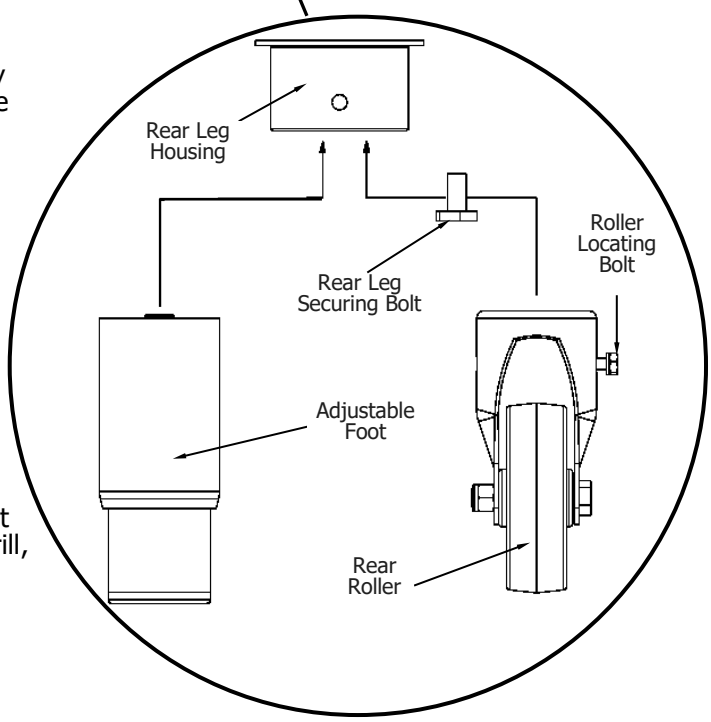




KW COMMERCIAL KITCHEN
Distributed by KW Commercial Kitchen | 1300 001 366
www.kwcommercial.com.au | sales@kwcommercial.com.au

## Gas Connection

**NOTE: ALL GAS FITTING MUST ONLY BE CARRIED OUT BY A QUALIFIED PERSON.**

1. Waldorf Chargrills do not require an electrical connection, as they function on gas supply only.
2. It is essential that gas supply is correct for chargrill to be installed and that adequate supply pressure and volume is available. The following checks should be made before installation:
   a. **Gas Type** the appliance has been supplied for is shown on a coloured sticker located above gas entry point and on the rating plate. Check these are correct for gas supply appliance is being installed for. Gas conversion procedure is detailed in 'Gas Conversion and Specification' section of this manual.
   b. **Supply Pressure** required for this appliance is shown in 'Specifications' section of this manual. Check gas supply to ensure that adequate supply pressure exists.
   c. **Input Rate** of this appliance is shown on Rating Plate and in 'Specifications' section of this manual. Input rate should be checked against available supply line capacity. **Particular note should be taken if chargrill is being added to an existing installation.**

**NOTE: It is important that adequately sized piping runs directly to the connection point on the appliance with as few tees and elbows as possible to give maximum supply volume.**

3. Fit gas regulator supplied, into gas supply line as close to the appliance as possible.
   For CH8300, the regulator connection is ½" BSP female. Connection on unit is ½" BSP male.
   For all other models, regulator connection is ¾" BSP female. Connection on unit is ¾" BSP male.
   (Refer to 'Specifications' section for gas supply location dimensions).

**NOTE:**
**Gas pressure regulator provided with this appliance is convertible between Natural Gas and LPG as shown in the 'Gas Conversion Section' in this manual.**
**Ensure the regulator is converted to the correct gas type that appliance will operate on. Regulator outlet pressure is fixed ex-factory for gas type that regulator is converted to and it is <u>NOT to be adjusted</u>.**

4. A suitable joining compound which resists the breakdown action of LPG, must be used on every gas line connection, unless compression fittings are used.

**NOTE: A manual isolation valve must be fitted to individual appliance supply line.**

5. Correctly locate appliance into its final operating position and using a spirit level, adjust legs so that the appliance is level and at the correct height.
6. Connect gas supply to the appliance.
7. Check gas operating pressure is as shown in 'Specifications' section.
8. Check all gas connections for leakage using soapy water or other gas detecting equipment.

**Warning**

**DO NOT USE A NAKED FLAME TO CHECK FOR GAS LEAKAGES.**

**NOTE: Measure the burner operating pressure at the manifold test point with <u>one burner</u>, for CH8300G and CH8450G models or <u>two burners</u>, for other models, operating at full setting. Operating pressure is ex-factory set and not to be adjusted, apart from when converting between gases, if required. (Refer to 'Gas Conversion' section for details).**

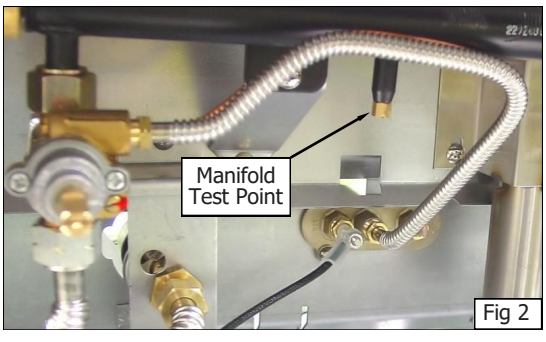

Fig 2



KW COMMERCIAL KITCHEN
Distributed by KW Commercial Kitchen | 1300 001 366
www.kwcommercial.com.au | sales@kwcommercial.com.au

## Commissioning

1. Before leaving new installation;
   a. Check the following functions in accordance with operating instructions specified in 'Operation' section of this manual.
      - Light the Pilot Burner.
      - Light the Main Burner.
      - Check Low Fire Burner Operation.
      - Check High Fire Burner Operation.

   b. Ensure operator has been instructed in the areas of correct lighting, operation, and shutdown procedure for this appliance.

2. This manual must be kept by the owner for future reference and a record of, ***Date of Purchase***, ***Date of Installation*** and ***Serial Number of Unit*** recorded and kept with this manual. **(These details can be found on the rating plate attached to the underside of the R/H side, front hob lower trim).**

**NOTE: If it is not possible to get the chargrill to operate correctly, contact suppler of this appliance.**



KW COMMERCIAL KITCHEN
Distributed by KW Commercial Kitchen | 1300 001 366
www.kwcommercial.com.au | sales@kwcommercial.com.au

## Operation Guide

**Caution**

- **This appliance is for professional use and is only to be used by qualified persons.**
- **Only authorised service persons are to carry out installation, servicing or gas conversion operations.**
- **Components having adjustments protected (e.g. paint sealed) by the manufacturer should not be adjusted by the user / operator.**

## Description of Controls

Fig 3

**Gas Control Knobs**

- OFF Position
- PILOT Burner
- HIGH Flame
- LOW Flame

**Piezo Igniter** (with burner flame viewing ports).



KW COMMERCIAL KITCHEN
Distributed by KW Commercial Kitchen | 1300 001 366
www.kwcommercial.com.au | sales@kwcommercial.com.au

## Lighting Pilot Burners

**Warning**

**WHEN A SOLID GRIDDLE PLATE IS USED, IT'S SURFACE TEMPERATURE CAN REACH OVER 350°C WHEN THE APPLIANCE IS OPERATED AT FULL HEAT SETTING.**

**NOTE: All chargrill models incorporate a push button piezo ignition system for each individual pilot burner.**

1. Depress gas control knob and rotate anti-clockwise to the 'PILOT' position.
2. With gas control knob depressed, press piezo igniter until pilot burner ignites. (Each operation of the piezo igniter button will generate a single spark). Pilot ignition can be viewed through the openings in the plastic surround of the piezo igniter button.
3. Hold in the gas control knob for approximately 10-15 seconds, then release. Pilot burner should remain alight. (If not repeat Items 2 and 3 above).

## Lighting Main Burners

1. Turn gas controls anti-clockwise to the first stop ('FULL' flame position) and allow the chargrill to heat up to operating temperature.
2. 'LOW' flame can be selected by depressing gas control knob and rotating fully anti-clockwise.
3. For intermediate heat, position gas control knob between 'HIGH' and 'LOW' positions for the desired heat setting.
4. During idle periods, main burners can be turned down to maintain a suitable temperature, or the gas controls can be set to the 'PILOT' position as required.

**NOTE:**

- **Always set the gas control knob to the 'HIGH' position when lighting main burners.**
- **If pilot burner goes out during normal operation, wait 5 minutes before attempting to re-light the pilot burner.**

IMPORTANT:

**Should any abnormal operation occur like;**

**- ignition problems,**
**- abnormal burner flame,**
**- burner control problems,**
**- partial or full loss of burner flame in normal operation.**

**The appliance requires IMMEDIATE service by a qualified service person and should not be used until a service is carried out.**



KW COMMERCIAL KITCHEN
Distributed by KW Commercial Kitchen | 1300 001 366
www.kwcommercial.com.au | sales@kwcommercial.com.au

## Griddle Plate Fitting.

The following options of griddle plate (Fig 4) can be fitted to the chargrill:-

- **(A) Griddle Plate 300mm or 450mm wide - (cast).**
- **(B) Griddle Plate 300mm or 450mm - (fabricated).**

**NOTE: If fitting a Griddle Plate to your chargrill, remove the required cast Radiants (Item 2) (See Fig 5) that sit directly beneath the griddle plate, this will give a more intense heat onto the griddle plate.**

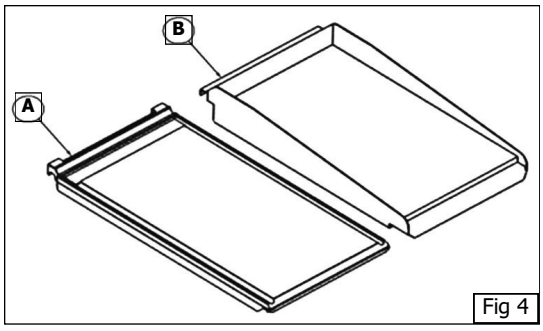

Fig 4

To fit a Griddle Plate to your Chargrill:-

1. Remove the BBQ Grates (Item 1).
2. Remove the cast Radiants (Item 2) that sit directly beneath the griddle plate.
3. Fit Griddle Plate (Item A) or (Item B), as required (Fig 4).

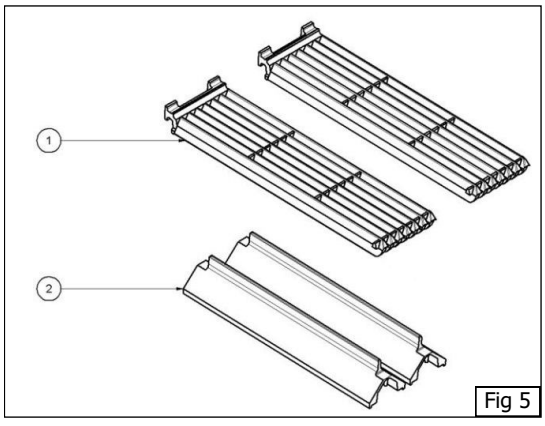

Fig 5

## Chargrill Grate Reversal.

The grates can be fitted to the chargrill in either of two ways:-

They can be fitted in the FLAT position (Fig 6). This is ideal if you require the flame grill effect as any fat / oil will fall directly onto the Radiants (2) and will be burnt off to give a flame grilled flavour to the food.

They can be reversed and fitted in the RAISED position (Fig 7) which allows the rear of the grate to sit slightly raised, any fat released from the product being cooked will be channelled by the grooves in the grate directly into the fat collection area at the front of the chargrill.

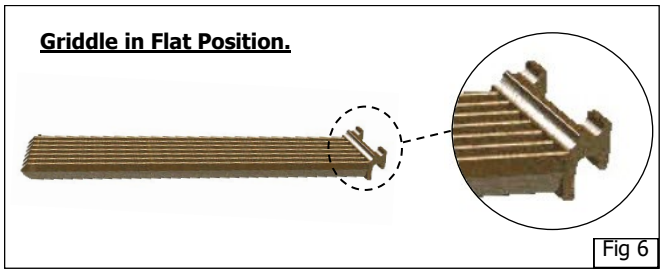

Fig 6

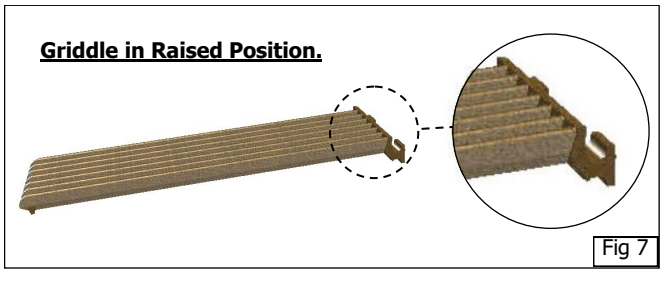

Fig 7



KW COMMERCIAL KITCHEN
Distributed by KW Commercial Kitchen | 1300 001 366
www.kwcommercial.com.au | sales@kwcommercial.com.au

# Cleaning and Maintenance

## General

**Caution**

**Always turn 'Off' the gas supply before cleaning.**

**This appliance is not water proof.**

**Do not use water jet spray to clean the interior or exterior of this appliance.**

Clean the chargrill regularly. A clean chargrill looks better, will last longer and will perform better. Carbonised grease on the cooking surface or on the chargrill will hinder the transfer of heat from the cooking surface to the food. This will result in loss of cooking efficiency.

**DO NOT use water on chargrill while this item is still hot as warping and cracking may occur. Allow chargrill to cool down before cleaning**.

**NOTE:**

- **DO NOT use abrasive or caustic detergents or strong solvents as they could corrode or damage the chargrill.**
- **To prevent rust forming on the chargrill, ensure that any detergent or cleaning material has been completely removed after each cleaning. The appliance should be switched 'On' briefly to ensure the chargrill becomes dry. Spread a thin coat of oil or grease over the chargrill surface to form a protective greasy film.**

To keep your chargrill clean and operating at peak efficiency, follow the procedures shown below:-

## Daily Cleaning

**Caution**

**If the Chargrill is fitted with a griddle plate, if using a scraper tool to clean the griddle plate, always apply even pressure over whole surface of the scraper tool, to prevent scoring of griddle plate surface.**

**NEVER bang the sharp edge of the scraper tool on the flat surface of the griddle plate as this will damage the griddle plate and invalidate the warranty.**

1. Crumb tray(s) should be checked and emptied frequently to prevent overflow and spillage. Remove crumb tray(s) while still warm so that grease is in a liquid state. Empty any grease from trays and wash thoroughly in same manner as any cooking utensil.
2. Remove grates and radiants and thoroughly clean splash back, interior and exterior surfaces of the chargrill, with hot water, a detergent solution and a soft scrubbing brush.
3. Brush chargrill surface with a soft bristled brush. Any carbon deposits should be removed using a scraper tool followed by wiping with a cloth to prevent accumulation of food deposits.
4. Dry cooking area thoroughly with a dry cloth and polish with a soft dry cloth.



KW COMMERCIAL KITCHEN
Distributed by KW Commercial Kitchen | 1300 001 366
www.kwcommercial.com.au | sales@kwcommercial.com.au

## Weekly Cleaning

**NOTE:**

- **If chargrill usage is very high, we recommend weekly cleaning is carried out more frequently.**
- **Ensure protective gloves are worn during cleaning.**
- **DO NOT use harsh abrasive detergents, strong solvents or caustic detergents as they will damage chargrill and burners.**
- **DO NOT use water on griddle plates while they are still hot as warping may occur. Allow these items to cool and then remove for cleaning.**

**Grates (Cast Iron)**

a. Clean grates thoroughly with a wire brush or a flexible spatula.
b. A scraper tool can be used to remove stubborn carbon and deposits.
c. Clean with hot water, a recommended detergent solution and a scrubbing brush. Dry all components thoroughly with a dry cloth.
d. Switch the chargrill 'On' briefly to ensure grates become dry. Spread a thin film of cooking oil over grates to form a protective film.

Fig 8

**Radiants (Cast Iron)**

a. Clean radiants thoroughly with a wire brush or a flexible spatula.
b. A scraper tool can be used to remove stubborn carbon and deposits.
c. Clean with hot water, a mild detergent solution and a scrubbing brush. Dry all radiants thoroughly with a dry cloth.

**Griddle Plate (Optional Extra)**

**Caution**

**If the Chargrill is fitted with a griddle plate, if using a scraper tool to clean the griddle plate, always apply even pressure over whole surface of the scraper tool, to prevent scoring of griddle plate surface.**

**NEVER bang the sharp edge of the scraper tool on the flat surface of the griddle plate as this will damage the griddle plate and invalidate the warranty.**

a. Remove and clean grease collection drawer frequently to prevent over spills.
b. Clean griddle surface thoroughly with a scraper tool or wire brush. If necessary use a griddle stone or a scotch bright pad on griddle surface to remove stubborn or accumulated carbon deposits.
c. Occasionally bleach griddle plate with vinegar when plate is cold.
d. Clean with hot water, a mild detergent solution and a scrubbing brush. Dry all components thoroughly with a dry cloth.

**NOTE: To prevent rust forming on the griddle plate, ensure all detergent and cleaning material has been entirely removed after each cleaning process. Switch the chargrill 'On' briefly to ensure griddle plate is dry. Spread a thin film of cooking oil over griddle plate to form a protective greasy film.**



KW COMMERCIAL KITCHEN
Distributed by KW Commercial Kitchen | 1300 001 366
www.kwcommercial.com.au | sales@kwcommercial.com.au

### Main Burners

a. Clean main burners with hot water, a recommended detergent solution and a scrubbing brush. Ensure any excess water is removed from inside the burners. Dry all burners thoroughly with a dry cloth.
b. Ensure burners are fitted correctly over main injectors and are located properly into recesses in chargrill.

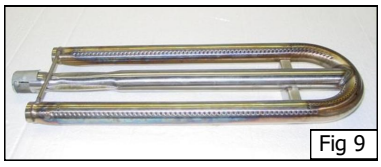
Fig 9

### Stainless Steel Surfaces

a. Clean exterior surfaces of chargrill with hot water, a mild detergent solution and a soft scrubbing brush. Note that gas control knobs are a push fit onto gas control valve spindles and can be removed to clean control panel.
b. Baked on deposits or discolouration may require a good quality stainless steel cleaner or stainless steel wool. Always apply cleaner when appliance is cold and rub in direction of the grain.
c. Dry grease tray thoroughly with a dry cloth.
d. Dry all components thoroughly with a dry cloth and polish with a soft dry cloth.

Fig 10

## Periodic Maintenance

**NOTE: All maintenance operations should only be carried out by a qualified service person.**

To achieve the best results cleaning must be regular and thorough and all controls and mechanical parts checked and adjusted periodically by a competent serviceman. If any small faults occur, have them attended to promptly. Don't wait until they cause a complete breakdown. It is recommended that the appliance is serviced every 6 months.

### Gas Control Valve Re-Greasing

Gas control valve should be dismantled and greased every 6 months to ensure correct operation.

To carry out this operation;-

a. Remove gas control knobs from gas tap spindles.
b. Remove drip tray from appliance.
c. Remove two screws on underside of control panel, securing control panel to hob.
d. Remove control panel from front of appliance.
e. Remove 2 screws holding shaft plate to gas control body and remove control shaft and plate. (See Fig 11). Note orientation of shaft for correct re-assembly.
f. Using needle nose pliers or similar, pull out gas control spindle, again noting its orientation.
g. Apply a suitable high temperature gas cock grease or lubricant such as ROCOL - A.S.P (Anti scuffing paste)/ Dry Moly Paste to outside of spindle. (See Fig 12).
h. Replace spindle and re-assemble gas control in reverse order.
i. Refit control panel to appliance and secure with 2 screws.
j. Refit knobs to gas control valve spindles.

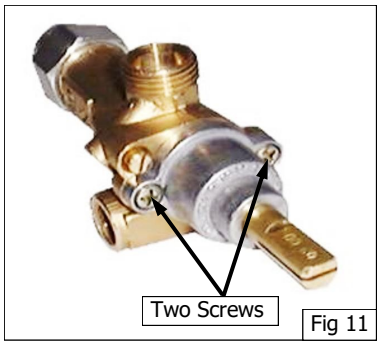

Fig 11

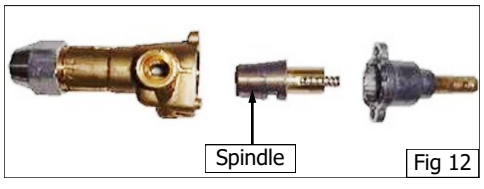

Fig 12



KW COMMERCIAL KITCHEN
Distributed by KW Commercial Kitchen | 1300 001 366
www.kwcommercial.com.au | sales@kwcommercial.com.au

This section provides an easy reference guide to the more common problems that may occur during operation of your equipment. The fault finding guide in this section is intended to help you correct, or at least accurately diagnose problems with your equipment.

Although this section covers the most common problems reported, you may encounter a problem not covered in this section. In such instances, please contact your local authorised service agent who will make every effort to help you identify and resolve the problem. Please note that the service agent will require the following information:-

- **Model Trade Name and Serial Number of the Appliance. (both can be found on the Rating Plate located on the appliance).**

| Fault | Possible Cause | Remedy |
|---|---|---|
| Pilot won't light. | No gas supply.<br><br>Blocked pilot injector. | Ensure gas isolation valve is turned 'On' and bottles are not empty.<br><br>Call service provider. |
| Pilot goes out when gas control knob is released. | Releasing knob before the thermocouple has heated.<br><br>Pilot flame too small.<br>- Gas pressure too low.<br>- Partially blocked pilot injector.<br><br>Thermocouple faulty. | Hold knob in for at least 20 seconds following ignition of pilot.<br><br>Call service provider.<br><br>Call service provider. |
| Main burner will not light. | Incorrect supply pressure.<br><br>Faulty gas control. | Call service provider.<br><br>Call service provider. |

**NOTE: Components having adjustments protected (e.g. paint sealed) by the manufacturer, are only to be adjusted by an authorised service agent. They are not to be adjusted by an unqualified service person.**



KW COMMERCIAL KITCHEN
Distributed by KW Commercial Kitchen | 1300 001 366
www.kwcommercial.com.au | sales@kwcommercial.com.au

## Conversion Procedure

**Caution**

**Ensure Appliance is isolated from gas supply before commencing servicing.**

**NOTE:**

- **Gas conversions should only be carried out by qualified persons. All connections must be checked for leaks before re-commissioning the appliance.**
- **Adjustment of components that have adjustments / settings sealed (e.g. paint sealed) can only be adjusted in accordance with the following instructions and shall be re-sealed before re-commissioning this appliance.**
- **For relevant gas specifications refer to 'Gas Specifications Tables' at rear of this section.**

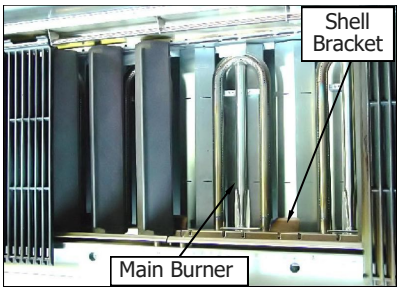


### Main Burners

1. Remove the following:-
   - Gas control knobs.
   - Control Panel.
   - Chargrill castings / griddle plates and inner radiants.
   - **CH8300 Only** - Remove left / right and end inner heat shield panels.
   - Main burners.
2. Remove main burner injectors and replace with correct size injectors as shown in 'Gas Specifications Tables' at rear of this section.
3. Check / adjust main burner aeration shutter as shown in 'Gas Specifications Tables' at rear of this section.
4. Refit the following:-
   - Main burners.
   - Inner radiants, chargrill castings / griddle plates.

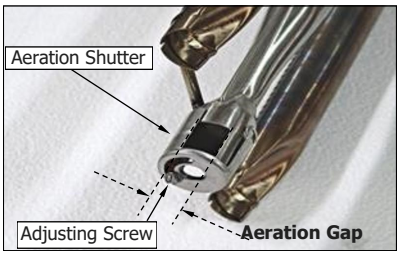


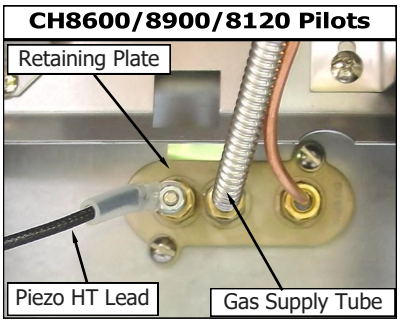


### Pilot Burners

1. Disconnect the following:-
   - Gas supply tube to pilot burner.
2. Remove pilot injectors and replace with correct size pilot injectors as shown in 'Gas Specifications Tables' at rear of this section.
3. Reconnect the following:-
   - Gas supply tube to pilot burner.
   - **CH8300 Only** - Refit left / right and end inner heat shield panels, burner supports.
   - Inner radiants, chargrill castings / griddle plates.

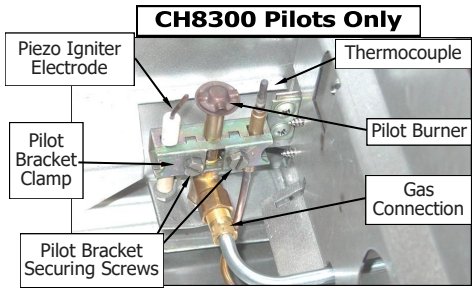


### Low Fire Adjustment (All Models)

1. Light main burners and check flame size on 'Low' setting.
   - **Adjust low fire adjustment screw on burner gas control valves to obtain desired flame size.**

**NOTE: 'Low Fire Adjustment Screw' should be sealed with coloured paint on completion of low fire adjustment.**

2. Refit control panel.
3. Refit gas control knobs.

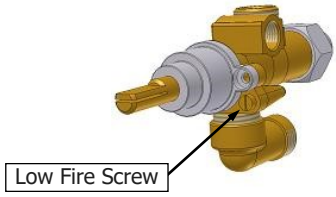




Distributed by KW Commercial Kitchen | 1300 001 366
www.kwcommercial.com.au | sales@kwcommercial.com.au

## Gas Regulator

**- NAT Gas / LPG / Butane Only.**

**NOTE: Gas regulator supplied is convertible between Natural Gas and LP Gas, but it's outlet pressure is fixed ex-factory and is NOT to be adjusted.**

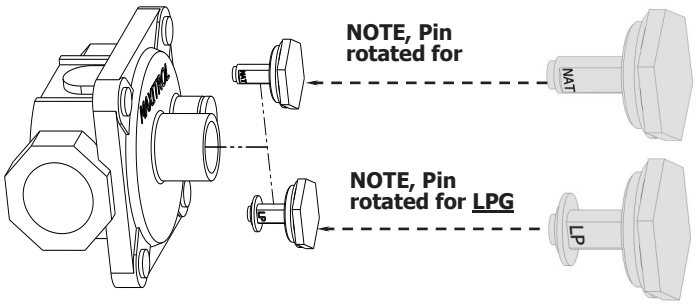


**- Town Gas Only.**

1. Remove slotted cap from regulator.
2. Turn 'On' gas supply and appliance.
3. Adjust pressure adjusting screw to achieve correct burner operating pressure.

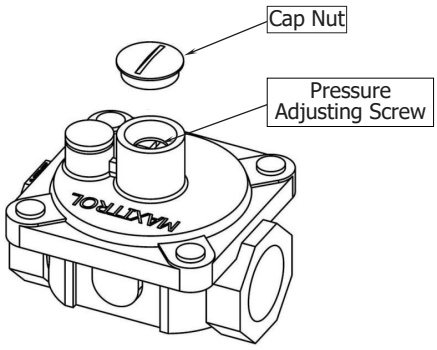


**NOTE: Measure burner operating pressure at manifold test point and with two burners operating at 'High Flame' setting. (With exception of CH8300 and CH8450G models which have one burner only).**

4. Verify operating pressure remains correct (Re-adjust regulator if required).
5. Screw cap nut back onto regulator.

## Gas Type Labels

On completion of the gas conversion, replace gas type labels located at:-

- The rear of the unit, above the gas connection.
- Beside the rating plate.

## Commissioning

Before leaving the converted installation;

1. Check all gas connections for leakages using soapy water or other gas detecting equipment.

**Warning**

**DO NOT USE A NAKED FLAME TO CHECK FOR GAS LEAKAGES.**

2. Check the following functions in accordance with the operating instructions specified in 'Operation' section of this manual.
   - Light the Pilot Burners.
   - Light the Main Burners.
   - Check the Low Fire burner operation.
   - Check the High Fire burner operation.
   - Ensure that all the controls operate correctly.
   - Ensure that the operating pressure remains correct.
3. Ensure any adjustments done to components that have the adjustments / settings sealed (e.g. paint sealed) are re-sealed.

**NOTE: If for some reason it is not possible to get the unit to operate correctly, shut 'Off' gas supply and contact the supplier of this unit.**



KW COMMERCIAL KITCHEN
Distributed by KW Commercial Kitchen | 1300 001 366
www.kwcommercial.com.au | sales@kwcommercial.com.au

## Gas Specifications

### - Australia

| | Natural Gas | | | LP Gas (Propane) | | |
|---|---|---|---|---|---|---|
| | CH8300G | CH8450G | CH8600G CH8900G CH8120G | CH8300G | CH8450G | CH8600G CH8900G CH8120G |
| **Main Burner Injectors** | 2.70mm | 3.50mm | 2.70mm | 1.65mm | 1.90mm | 1.65mm |
| **Pilot Burner Injectors** | 0.35 | 0.45 | | 0.25 | 0.30 | |
| **Low Fire Adjustment** | $1^1/_4$ turns out (ccw) | $1^7/_8$ turns out (ccw) | $1^1/_4$ turns out (ccw) | ½ turn out (ccw) | $1^1/_4$ turns out (ccw) | ½ turn out (ccw) |
| **Burner Operating Pressure (*)** | 1.0 kPa | 0.95 kPa | | 2.5 kPa | 2.6 kPa | |
| **Main Burner Aeration Shutter** | Fully Open | | | Fully Open | | |
| **Gas Regulator Cap Screw** | | | | | | |

### - New Zealand

| | Natural Gas | | | LP Gas | | |
|---|---|---|---|---|---|---|
| | CH8300G | CH8450G | CH8600G CH8900G CH8120G | CH8300G | CH8450G | CH8600G CH8900G CH8120G |
| **Main Burner Injectors** | 2.70mm | 3.50mm | 2.70mm | 1.65mm | 1.90mm | 1.65mm |
| **Pilot Burner Injectors** | 0.35 | 0.45 | | 0.25 | 0.30 | |
| **Low Fire Adjustment** | $1^1/_4$ turns out (ccw) | $1^7/_8$ turns out (ccw) | $1^1/_4$ turns out (ccw) | ½ turn out (ccw) | ½ turn out (ccw) | ½ turn out (ccw) |
| **Burner Operating Pressure (*)** | 1.0 kPa | 0.95 kPa | | 2.5 kPa | 2.6 kPa | |
| **Main Burner Aeration Shutter** | Fully Open | | | Fully Open | | |
| **Gas Regulator Cap Screw** | | | | | | |

**NOTE:**

*** - Measure burner operating pressure at manifold test point with <u>one burner</u> for CH8300 and CH8450G Models or <u>two burners</u> for other models, operating at full setting. Operating pressure is ex-factory set and is not to be adjusted, apart from when converting between gases, if required. (Refer to 'Gas Conversion' section for details).**



KW COMMERCIAL KITCHEN
Distributed by KW Commercial Kitchen | 1300 001 366
www.kwcommercial.com.au | sales@kwcommercial.com.au

## - United Kingdom

Appliance Classification
Category: **$II_{2H3P}$ (20, 30 / 37).**
Flue Type: **$A_{1.}$**

| | Natural Gas (G20) | | | Propane (G31) | | |
|---|---|---|---|---|---|---|
| | **CH8300G** | **CH8450G** | **CH8600G CH8900G CH8120G** | **CH8300G** | **CH8450G** | **CH8600G CH8900G CH8120G** |
| **Main Burner Injectors** | 2.70mm | 3.50mm | 2.70mm | 1.65mm | 1.90mm | 1.65mm |
| **Pilot Burner Injectors** | 0.35 | 0.45 | | 0.25 | 0.30 | |
| **Low Fire Adjustment** | $1^1/_4$ turns out (ccw) | $1^7/_8$ turns out (ccw) | $1^1/_4$ turns out (ccw) | ½ turn out (ccw) | $1^1/_4$ turns out (ccw) | ½ turn out (ccw) |
| **Burner Operating Pressure (*)** | 1.0 kPa | 0.95 kPa | | 2.5 kPa | 2.6 kPa | |
| **Main Burner Aeration Shutter** | Fully Open | | | Fully Open | | |
| **Gas Regulator Cap Screw** | | | | | | |

**NOTE:**

*** - Measure burner operating pressure at manifold test point with <u>one burner</u> for CH8300 and CH8450G models, or <u>two burners</u> for other models, operating at full setting. Operating pressure is ex-factory set and is not to be adjusted, apart from when converting between gases, if required. (Refer to 'Gas Conversion' section for details).**



KW COMMERCIAL KITCHEN
Distributed by KW Commercial Kitchen | 1300 001 366
www.kwcommercial.com.au | sales@kwcommercial.com.au

## - All Other Markets

| | Natural Gas | | | Town Gas (**) | | |
|---|---|---|---|---|---|---|
| | CH8300G | CH8450G | CH8600G CH8900G CH8120G | CH8300G | CH8450G | CH8600G CH8900G CH8120G |
| **Main Burner Injectors** | 2.70mm | 3.50mm | 2.70mm | Ø 4.50mm | T.B.A. | Ø 4.50mm |
| **Pilot Burner Injectors** | 0.35 | 0.45 | | 0.60m | 0.75mm | |
| **Low Fire Adjustment** | $1^1/_4$ turns out (ccw) | $1^7/_8$ turns out (ccw) | $1^1/_4$ turns out (ccw) | 2 turns out (ccw) | | |
| **Burner Operating Pressure (*)** | 1.0 kPa | 0.95 kPa | | 0.63 kPa | | |
| **Main Burner Aeration Shutter** | Fully Open | | | Fully Open | | |
| **Gas Regulator Cap Screw** | | | | Adjustable Regulator (Adjust to Burner Operating Pressure specified). | | |

| | LP Gas (Propane) | | | Butane | | |
|---|---|---|---|---|---|---|
| | CH8300G | CH8450G | CH8600G CH8900G CH8120G | CH8300G | CH8450G | CH8600G CH8900G CH8120G |
| **Main Burner Injectors** | 1.65mm | 1.90mm | 1.65mm | 1.55mm | 1.80mm | 1.55mm |
| **Pilot Burner Injectors** | 0.25 | 0.30 | | 0.25 | 0.30 | |
| **Low Fire Adjustment** | ½ turn out (ccw) | $1^1/_4$ turns out (ccw) | ½ turn out (ccw) | ½ turn out (ccw) | ½ turns out (ccw) | ½ turn out (ccw) |
| **Burner Operating Pressure (*)** | 2.5 kPa | 2.6 kPa | | 2.5 kPa | 2.6 kPa | |
| **Main Burner Aeration Shutter** | Fully Open | | | Fully Open | | |
| **Gas Regulator Cap Screw** | | | | | | |

**NOTE:**

- **(*) - Measure burner operating pressure at the manifold test point with <u>one burner</u> for CH8300 and CH8450G Models or <u>two burners</u> for other models, operating at the high setting.**
- **NAT, LPG & Butane Only - Operating pressure is ex-factory set and is not to be adjusted, unless when converting between gases, if required.**
- **(**) - TOWN GAS Only - Adjust burner operating pressure using adjustable gas regulator supplied.**
- **Refer to 'Gas Conversion and Specifications' section in this manual for further details.**



KW COMMERCIAL KITCHEN
Distributed by KW Commercial Kitchen | 1300 001 366
www.kwcommercial.com.au | sales@kwcommercial.com.au

# Replacement Parts List

**IMPORTANT:**

**Only genuine authorized replacement parts should be used for servicing and repair of this appliance. Instructions supplied with parts should be followed when replacing components.**

**For further information and servicing instructions, contact your nearest authorized service branch (contact details are as shown on reverse of front cover of this manual).**

When ordering replacement parts, please quote the part number and the description as listed below.
If the part required is not listed below, request the part by description and quote the model and serial number which is on the rating plate.

| CHARGRILL - PARTS LIST | | | | | | |
|---|---|---|---|---|---|---|
| Part No. | Description | CH8300G | CH8450G | CH8600G | CH8900G | CH8120G |
| 227286 | BURNER | ● | | ● | ● | ● |
| 237107 | BURNER | | ● | | | |
| 229719 | PILOT ASSY 3 WAY | ● | | | | |
| 019464K | PILOT BURNER KIT - BBQ | | ● | ● | ● | ● |
| 227508 | PIEZO - SIT | ● | ● | ● | ● | ● |
| 228010 | PIEZO HOUSING | ● | ● | ● | ● | ● |
| 019428 | THERMOCOUPLE 320mm M9 x 1 | ● | | | | |
| 019218 | THERMOCOUPLE 450mm | | ● | ● | ● | ● |
| 227404 | GAS VALVE 21S | ● | ● | ● | ● | ● |
| 231540 | SPARK ELECTRODE | ● | | | | |
| 019624 | ELECTRODE | ● | | | | |
| 229731 | HT LEAD 250mm RING TERMINAL | | ● | | | |
| 228047 | HT LEAD 250mm | | | ● | ● | ● |
| | | | | | | |
| 227985 | PILOT INJECTOR - 0.35mm - NAT GAS | ● | | | | |
| 018972 | PILOT INJECTOR - 0.45mm - NAT GAS | | ● | ● | ● | ● |
| 227984 | PILOT INJECTOR - 0.25mm - LPG / PROPANE / BUTANE | ● | | | | |
| 018971 | PILOT INJECTOR - 0.30mm - LPG / PROPANE / BUTANE | | ● | ● | ● | ● |
| 232309 | PILOT INJECTOR - 0.60mm - TOWNS | ● | | | | |
| 026393 | PILOT INJECTOR - 0.75mm - TOWNS | | ● | ● | ● | ● |
| | | | | | | |
| 037270 | MAIN INJECTOR - 2.70mm - NAT GAS | ● | | ● | ● | ● |
| 037350 | MAIN INJECTOR - 3.50mm - NAT GAS | | ● | | | |
| 037165 | MAIN INJECTOR - 1.65mm - LPG (PROPANE) | ● | | ● | ● | ● |
| 037190 | MAIN INJECTOR - 1.90mm - LPG (PROPANE) | | ● | | | |
| 037155 | MAIN INJECTOR - 1.55mm - BUTANE | ● | | ● | ● | ● |
| 037180 | MAIN INJECTOR - 1.80mm - BUTANE | | ● | | | |
| 037450 | MAIN INJECTOR - 4.50mm - TOWNS | ● | T.B.A | ● | ● | ● |
| | | | | | | |
| 227384 | KNOB WALDORF 8mm GAS PF | ● | ● | ● | ● | ● |
| 229531 | DRIP TRAY | ● | | | | |
| 236655 | CRUMB TRAY | | ● | | | |
| 228488 | CRUMB TRAY | | | ● | | |
| 228487 | CRUMB TRAY | | | | ● | |
| 228489 | CRUMB TRAY | | | | | ● |
| | | | | | | |
| 013908 | SPACER FOOT ASSY | ● | | | | |
| 227851 | LEG 150mm (EXTEND. STUD) | | ● | ● | ● | ● |
| 227850 | LEG 150mm (FLUSH STUD) | | ● | ● | ● | |
| 229674 | REAR ROLLER ASSY | | ● | ● | ● | ● |
| 227854 | LEG EXTENSION 430mm | | ● | ● | ● | ● |
| 227855 | LEG 80mm (FOR BENCH MOUNT) | | ● | ● | ● | ● |



KW COMMERCIAL KITCHEN
Distributed by KW Commercial Kitchen | 1300 001 366
www.kwcommercial.com.au | sales@kwcommercial.com.au

## Gas Regulators

| Gas Type | Model | Gas Regulators | |
|---|---|---|---|
| | | Part No. | Description |
| Nat. Gas<br>LPG (Propane)<br>Butane | CH8300G | 228533 | ½" BSP F/F Convertible. |
| | CH8450G | 228531 | ¾" BSP F/F Convertible. |
| | CH8600G | | |
| | CH8900G | | |
| | CH8120G | | |
| Town Gas | ALL | 230185 | ¾" BSP F/F Adjustable. |

## Gas Conversion Kits

| Models | Gas Type to Convert to | | | |
|---|---|---|---|---|
| | Nat. Gas | LPG (Propane) | Butane | Town Gas |
| CH8300G | 231947 | 231946 | 231948 | 231949 |
| CH8450G | 237004 | 237003 | 237005 | 237006 |
| CH8600G | 231951 | 231950 | 231952 | 231953 |
| CH8900G | 231955 | 231954 | 231956 | 231957 |
| CH8120G | 231959 | 231958 | 231960 | 231961 |

## Optional Accessories

| Description | Part No |
|---|---|
| Casting Scraper Tool. | 228787 |
| Smooth Plate Scraper Blades (Pack of 2 blades). | 228567 |
| Chargrill Scraper Assembly. | 228787 |
| Drop-On Griddle Plate - 300mm (Cast, no sides). - (refer Operation Section). | 227002 |
| Drop-On Griddle Plate - 450mm (Cast, no sides). - (refer Operation Section). | 227003 |
| Drop-On Griddle Plate - 300mm (Steel, with sides)- (refer Operation Section). | 230707 |
| Drop-On Griddle Plate - 450mm (Steel, with sides)- (refer Operation Section). | 230710 |
| 450mm Plinth Kit. | 234792 |
| 600mm Plinth Kit. | 228795 |
| 900mm Plinth Kit. | 228799 |
| 1200mm Plinth Kit. | 228803 |



KW COMMERCIAL KITCHEN
Distributed by KW Commercial Kitchen | 1300 001 366
www.kwcommercial.com.au | sales@kwcommercial.com.au