PRODUCT DOCUMENT PACK

Prepared and distributed by KW Commercial Kitchen

PRODUCT

Waldorf 800 Series FNL8120G - 450mm Single Pan Gas Fryer Low Back Version

Model / SKU: FNL8120G

KW COMMERCIAL KITCHEN

7/72 Canterbury Road, Bankstown NSW 2200

Phone 1300 001 366

Email sales@kwcommercial.com.au

Web www.kwcommercial.com.au

Scan for the current KW product page

DOCUMENT NOTICE

The supplier document begins on the next page. KW contact branding is added in a separate footer area and does not replace the supplier's instructions, specifications or warranty terms.

Official supplier source: https://moffat.global.ssl.fastly.net/sites/default/files/products/specification/FN8120G_AN.pdf

Technical data sheet for

FAST FRI SINGLE PAN GAS FRYER 450mm

FN8120G

- High performance single pan fryer
- Patented infra-red burner system
- Easy clean stainless steel open pan with 10 year limited warranty
- 20L oil capacity
- Large capacity cool zone
- 32mm (1 1/4") drain valve
- Stainless steel exterior
- Easy service
- Fully modular
- Low back model (FNL) available

Overall Construction

- Stainless steel pan with 10 year limited warranty
- Bull nose welded 1.5mm 304 stainless steel
- Splashback 1.5mm 304 stainless steel
- Side panels 1.2mm 304 stainless steel
- Double skin door with 0.9mm 304 stainless exterior
- 32mm (1 1/4") drain valve
- 150mm legs in 63mm dia. heavy-duty 1.2mm 304 stainless steel with adjustable feet
- 2 baskets and stainless steel lid supplied standard

Controls

- Direct action thermostat reacts to + or – 1.0˚C
- Thermostat range 145 – 195˚C
- Over-temperature safety cut-out
- Millivolt gas valve system (no electrical supply)
- Flame failure protection on each pilot
- Piezo ignition to standing pilot burners

Cleaning and Servicing

- Open stainless steel pan for easy clean
- Easy clean basket support bar
- 32mm (1 1/2") drain valve for effective draining
- Easy clean stainless steel exterior
- Access to all parts from front of unit

Technical data sheet for

FAST FRI SINGLE PAN GAS FRYER 450mm

Waldorf 800 SERIES

Specifications

Production rate
31kg/hr
Pan Size
Oil capacity 20L (37lbs shortening)
Width 365mm
Length 380mm
Oil frying depth 95mm
Baskets
2 chrome plated wire baskets
140mm W x 335mm D x 145mm H
Stainless steel perforated basket support plate
Burners
2 x 45MJ/hr infra-red burners
Gas Power
90MJ/hr, 25kW
Gas connection
R 3/4 (BSP) male
300mm from RH side, 35mm from rear, and 125mm from floor
Optional rear connection
(refer specification drawing)
All units incorporate Natural and LP gas regulator

Dimensions
Width 450mm
Depth 805mm
Height 915mm
Incl. splashback 1130mm
Incl. low back 1085mm

Nett weight
81kg

Packing data
0.54m3, 122kg
Width 870mm
Depth 495mm
Height 1255mm

Gas types
Available in Natural gas and LP gas
Please specify when ordering
Units supplied complete with gas type conversion kits
Other gas types on request

Options at extra cost
Waldorf Filtamax filtration system
Fish plates
Extra baskets
Side splash guards
Joining caps
Castors
Plinth mounting

FN8120G

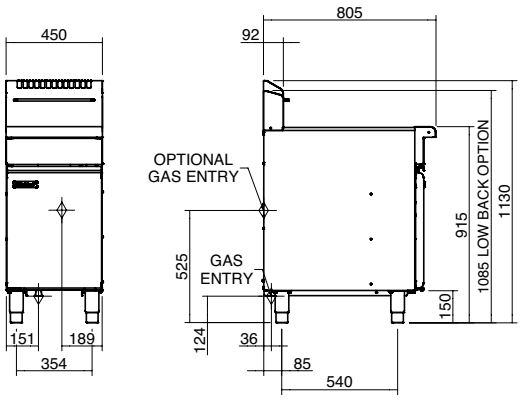

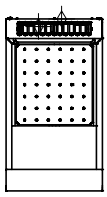

MOFFAT

moffat.com.au
moffat.co.nz

Australia
moffat.com.au

Moffat Pty Limited

Victoria/Tasmania
740 Springvale Road
Mulgrave, Victoria 3170
Telephone +613-9518 3888
Facsimile +613-9518 3833
vsales@moffat.com.au

New South Wales
Telephone +612-8833 4111
nswsales@moffat.com.au

South Australia
Telephone +613-9518 3888
vsales@moffat.com.au

Queensland
Telephone +617-3630 8600
qldsales@moffat.com.au

Western Australia
Telephone +618-9413 2400
wasales@moffat.com.au

New Zealand
moffat.co.nz

Moffat Limited

Rolleston
45 Illinois Drive
Izone Business Hub
Rolleston 7675
Telephone +64 3-983 6600
Facsimile +64 3-983 6660
sales@moffat.co.nz

Auckland
Telephone +64 9-574 3150
sales@moffat.co.nz

24:7 Service Support

ISO9001 Quality Management Standard

Cert. No. 6882

In line with policy to continually develop and improve its products, Moffat Limited reserves the right to change specifications and design without notice.

© Copyright Moffat Ltd

AN.W8.08/19

an Ali Group Company

The Spirit of Excellence