PRODUCT DOCUMENT PACK

Prepared and distributed by KW Commercial Kitchen

PRODUCT

Waldorf 800 Series RN8406E-CB - 600mm Electric Cooktop – Cabinet Base

Model / SKU: RN8406E-CB

KW COMMERCIAL KITCHEN

7/72 Canterbury Road, Bankstown NSW 2200

Phone 1300 001 366

Email sales@kwcommercial.com.au

Web www.kwcommercial.com.au

Scan for the current KW product page

DOCUMENT NOTICE

The supplier document begins on the next page. KW contact branding is added in a separate footer area and does not replace the supplier's instructions, specifications or warranty terms.

Official supplier source: https://moffat.global.ssl.fastly.net/sites/default/files/products/specification/RN840XE_AN.pdf

Technical data sheet for

ELECTRIC COOKTOPS 600mm

RN8400E-B, RN8400E-CB, RN8400E-LS, RN8403E-B, RN8403E-CB, RN8403E-LS, RN8406E-B, RN8406E-CB, RN8406E-LS

RN8400E-B

- Heavy-duty construction
- 2.4kW open radiant elements
- Optional Hot Plate elements
- 300mm and 600mm griddle plate options
- 3 models of base unit
- Stainless steel exterior
- Easy clean
- Easy service
- Fully modular
- Low back models (RNL) available

Overall Construction

Cooktop

- Welded hob with 1.5mm 304 stainless steel bull nose
- Splashback and side panels 1.2mm 304 stainless steel
- Front panels 0.9mm 304 stainless steel
- 2.4kW open radiant elements in heavy-duty welded element frames
- Vitreous enamelled element module and hob spill trays
- Hot Plate elements with machine finished 8mm steel plate (optional extra)
- 12mm thick mild steel griddle plates
- 2.5mm 304 stainless steel griddle splash guards
- Aluminised steel internal construction

Bench mount (supplied as –B model)

- Four 63mm dia. heavy-duty 1.2mm 304 stainless steel bench legs with adjustable feet
- Adjustable height 80mm – 105mm

Cabinet Base (supplied as –CB model)

- Fully modular for match suite finish
- Double skin 0.9mm 304 stainless steel interior and exterior
- Optional GN 1/1 4 position racking kit
- 63mm dia. heavy-duty 1.2mm 304 stainless steel legs with adjustable feet

Leg Stand (supplied as –LS model)

- Fully modular for matched suite finish
- Framed top for connection to Cooktop
- 63mm dia. heavy-duty 1.2mm 304 stainless steel legs with adjustable feet
- Fully modular framed stand shelf with 0.9mm 304 stainless steel finish
- Quick assembly design (no tools required)

Controls

- Large easy use control knob - heat resistant reinforced
- Easy view control settings on knob
- Radiant elements with energy regulator controls
- Hot Plate elements with energy regulator controls
- 50-320˚C thermostat per 300mm griddle section
- Indicator lights for power and heating for each element control

Cleaning and Servicing

- All models with easy clean stainless steel external finish
- Removable vitreous enamelled element module and hob spill trays
- Hinge up element and griddle sections
- Access to all parts from front of unit

Technical data sheet for

ELECTRIC COOKTOPS 600mm

Waldorf 800 SERIES

Specifications

Cooktop
2.4 kW Open Radiant elements
2.0 kW Hot Plate elements
3.6 kW Griddle elements
(per 300mm griddle section)

Griddle Plate
300mm Griddle cooking surface
292mm x 475mm, 1387cm2
600mm Griddle cooking surface
592mm x 475mm, 2812cm2

Electrical requirements
RN8400E
9.6 kW, 400-415Vac, 50/60hz, 2P+N+E, 20A/phase
RN8403E
8.4 kW, 400-415Vac, 50/60hz, 2P+N+E, 20A/phase max.
RN8406E
7.2 kW, 230-240Vac, 50/60hz, 1P+N+E, 30A

Electrical connection
130mm from RH side, 31mm from rear
85mm from bench height on bench models
740mm from floor on leg stand and cabinet base models

Dimensions
Bench models
Width 600mm
Depth 805mm
Height 315mm
Incl. splashback 530mm
Incl. low back 370mm

All models (excluding Bench model)
Width 600mm
Depth 805mm
Height 915mm
Incl. splashback 1130mm
Incl. low back 970mm

Nett weight
Bench and Leg Stand models
74kg
Cabinet Base models
79kg

Packing data
Bench and Leg Stand models
0.37m3, 110kg
Width 645mm
Depth 870mm
Height 665mm
Cabinet Base models
0.70m3, 131kg
Width 870mm
Depth 645mm
Height 1255mm

Options at extra cost
Hot Plate elements
(replace individual open radiant elements)
Ribbed griddle plates

RN8400E-B
Bench Model

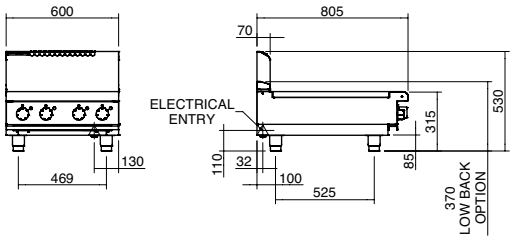

RN8400E-CB
Cabinet Base

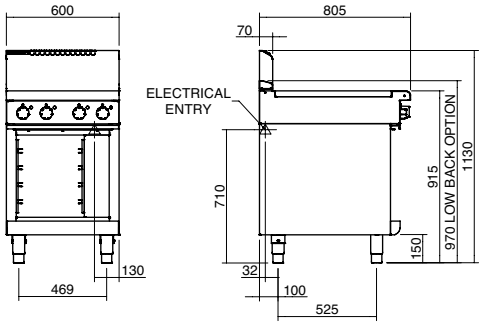

RN8400E-LS
Leg Stand

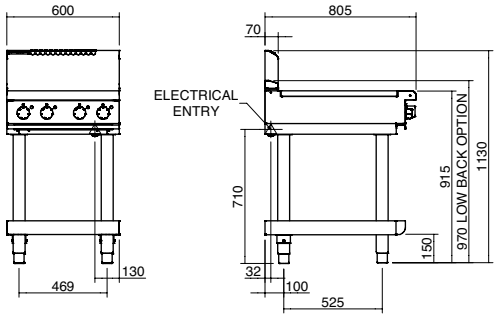

RN8400E

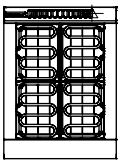

RN8403E

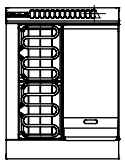

RN8406E

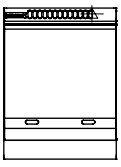

MOFFAT

moffat.com.au
moffat.co.nz

Australia
moffat.com.au

Moffat Pty Limited

Victoria/Tasmania
740 Springvale Road
Mulgrave, Victoria 3170
Telephone +613-9518 3888
Facsimile +613-9518 3833
vsales@moffat.com.au

New South Wales
Telephone +612-8833 4111
nswsales@moffat.com.au

South Australia
Telephone +613-9518 3888
vsales@moffat.com.au

Queensland
Telephone +617-3630 8600
qldsales@moffat.com.au

Western Australia
Telephone +618-9413 2400
wasales@moffat.com.au

New Zealand
moffat.co.nz

Moffat Limited

Rolleston
45 Illinois Drive
Izone Business Hub
Rolleston 7675
Telephone +64 3-983 6600
Facsimile +64 3-983 6660
sales@moffat.co.nz

Auckland
Telephone +64 9-574 3150
sales@moffat.co.nz

24:7 Service Support

ISO9001 Quality Management Standard

In line with policy to continually develop and improve its products, Moffat Limited reserves the right to change specifications and design without notice.

© Copyright Moffat Ltd

AN.W8.08/19

an Ali Group Company

Ali GROUP
The Spirit of Excellence