PRODUCT DOCUMENT PACK

Prepared and distributed by KW Commercial Kitchen

PRODUCT

Waldorf 800 Series GPL8900E-CB - 900mm Electric Griddle Low Back Version - Cabinet B

Model / SKU: GPL8900E-CB

KW COMMERCIAL KITCHEN

7/72 Canterbury Road, Bankstown NSW 2200

Phone 1300 001 366

Email sales@kwcommercial.com.au

Web www.kwcommercial.com.au

Scan for the current KW product page

DOCUMENT NOTICE

The supplier document begins on the next page. KW contact branding is added in a separate footer area and does not replace the supplier's instructions, specifications or warranty terms.

Official supplier source: https://moffat.global.ssl.fastly.net/sites/default/files/products/specification/GP8900E_an.pdf

Technical data sheet for

ELECTRIC GRIDDLE 900mm

GP8900E-B, GP8900E-CB, GP8900E-LS, GP8900E-RB

GP8900E-LS

- Heavy-duty thermostatic electric griddle
- 20mm thick griddle plate
- Ribbed plate options
- Chromed mirror plate options
- Top weld sealed plates
- 12kW heating elements
- Separate left and right heat zones
- 3 models of base unit
- 1 model of refrigerated base with two GN 1/1 drawers
- Stainless steel exterior
- Easy clean
- Easy service
- Fully modular
- Low back models (GPL) available

Overall Construction

Griddle

- 20mm thick machined top plates standard
- Optional ribbed plate sections
- Optional mirror finish hard chrome plates
- 2.5mm thick 304 stainless steel splash guards sides and rear
- 2.0mm thick grease channel
- Dual thermostatic control zones
- Welded hob surround with 1.5mm 304 stainless steel bull nose
- Splashback and side panels 1.2mm 304 stainless steel
- Front panels 0.9mm 304 stainless steel
- Stainless steel grease drawer
- Overlapping finish at front and rear of plate for easy clean

Bench mount (supplied as –B model)

- Four 63mm dia. heavy-duty 1.2mm 304 stainless steel bench legs with adjustable feet
- Adjustable height 80mm – 105mm

Cabinet base (supplied as –CB model)

- Fully modular for match suite finish
- Double skin 0.9mm 304 stainless steel interior and exterior
- Optional GN 1/1 4 position racking kit (1 or 2 cabinet bays)
- Up to eight 65mm GN 1/1 capacity
- 63mm dia. heavy-duty 1.2mm 304 stainless steel legs with adjustable feet

Leg stand (supplied as –LS model)

- Fully modular for matched suite finish
- Framed top for connection to Griddle
- 63mm dia. heavy-duty 1.2mm 304 stainless steel legs with adjustable feet
- Fully modular framed stand shelf with 0.9mm 304 stainless steel finish
- Suitable for rear or through shelf gas connection to Griddle
- Quick assembly design (no tools required)

Refrigerated base (supplied as –RB model)

- Self contained suite matched modular base
- Ventilated system with R134a refrigerant
- -2˚ to + 8˚C temperature (Tropical Climate rated)
- Two GN 1/1 drawers
- 100mm deep pan capacity
- Heavy-duty European telescopic drawer guides
- Magnetic drawer gaskets (replaceable without tools)
- 50mm fully foamed CFC free insulation
- 304 stainless steel exterior and interior
- Anti-corrosion treated evaporator
- No condensate drain required
- 63mm dia. heavy-duty 1.2mm 304 stainless steel legs with adjustable feet
- Condensing unit removable through front of unit for service
- Easy clean interior

Controls

Griddle

- Separate left and right side heat zones
- Two 50-300˚C thermostats
- Large easy use control knob - heat resistant reinforced
- Easy view control settings on knob
- Indicator lights for power and heating

Refrigerated base

- Digital control electronic thermostat
- Automatic defrost
- Automatic evaporation of defrost water
- -2 to +8˚C temperature range

Cleaning and Servicing

- All models with easy clean stainless steel external finish
- Plate is finished front and rear with overlap construction to remove cleaning traps
- Control service through front of unit

Technical data sheet for

ELECTRIC GRIDDLE 900mm

Waldorf 800 SERIES

Specifications

Griddle

Elements
6 x 2kW stainless steel sheathed heating elements
Electrical requirements
12kW
400-415Vac, 50/60Hz, 3P+N+E
Phase loading
L1 16.6A
L2 16.6A
L3 16.6A
Plate
Cooking surface 892mm x 530mm, 4728cm2
Electrical connection
130mm from LH side, 32mm from rear, and 655mm from floor

Refrigerated base

Type
Ventilated system
Refrigerant
R134a (160grams)
Climate classification
T – tropical
Electrical connection
220-240Vac, 50Hz, 1.8A, 1P+N+E
3 pin 10A plug cordset fitted

Dimensions

Bench models
Width 900mm
Depth 805mm
Height 315mm
Incl. splashback 530mm
Incl. low back 370mm
All models (excluding Bench model)
Width 900mm
Depth 805mm
Height 915mm
Incl. splashback 1130mm
Incl. low back 970mm

Nett weight

Bench and Leg Stand models
125kg
Cabinet Base and Refrigerated Base models
158kg

Packing data

Bench models
0.55m3, 170kg
Width 945mm
Depth 870mm
Height 665mm
All models (excluding Bench model)
1.03m3, 223kg
Width 945mm
Depth 870mm
Height 1255mm

Options at extra cost

Joining caps
Castors
Plinth mounting
Ribbed plate options
Chromed plate options

GP8900E-B
Bench Model

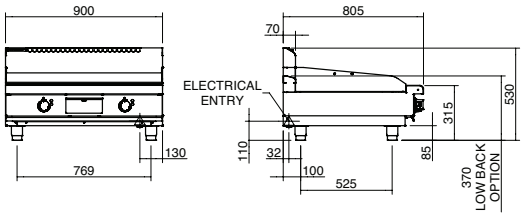

GP8900E-CB
Cabinet Base

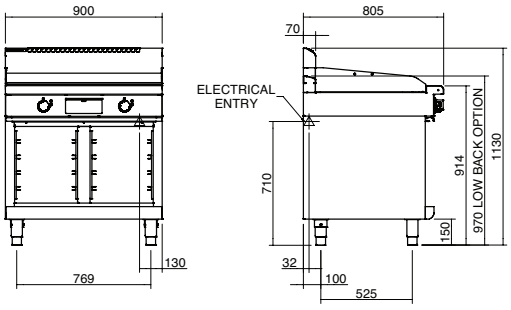

GP8900E-LS
Leg Stand

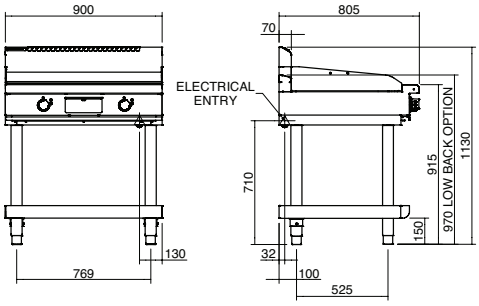

GP8900E-RB
Refrigerated Base

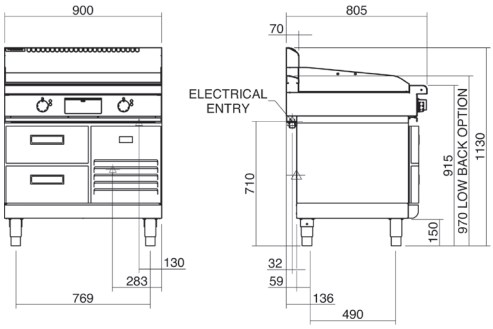

Plan

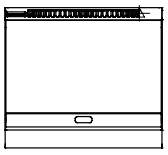

moffat.com.au
moffat.co.nz

Australia
moffat.com.au

Moffat Pty Limited

Victoria/Tasmania
740 Springvale Road
Mulgrave, Victoria 3170
Telephone +613-9518 3888
Facsimile +613-9518 3833
vsales@moffat.com.au

New South Wales
Telephone +612-8833 4111
nswsales@moffat.com.au

South Australia
Telephone +613-9518 3888
vsales@moffat.com.au

Queensland
Telephone +617-3630 8600
qldsales@moffat.com.au

Western Australia
Telephone +618-9413 2400
wasales@moffat.com.au

New Zealand
moffat.co.nz

Moffat Limited

Rolleston
45 Illinois Drive
Izone Business Hub
Rolleston 7675
Telephone +64 3-983 6600
Facsimile +64 3-983 6660
sales@moffat.co.nz

Auckland
Telephone +64 9-574 3150
sales@moffat.co.nz

24:7 Service Support

ISO9001 Quality Management Standard

In line with policy to continually develop and improve its products, Moffat Limited reserves the right to change specifications and design without notice.

© Copyright Moffat Ltd

AN.W8.01.2020

an Ali Group Company

The Spirit of Excellence