PRODUCT DOCUMENT PACK

Prepared and distributed by KW Commercial Kitchen

PRODUCT

Waldorf 800 Series BPL8080E - 900mm Electric Tilting Bratt Pan Low Back Version

Model / SKU: BPL8080E

KW COMMERCIAL KITCHEN

7/72 Canterbury Road, Bankstown NSW 2200

Phone 1300 001 366

Email sales@kwcommercial.com.au

Web www.kwcommercial.com.au

Scan for the current KW product page

DOCUMENT NOTICE

The supplier document begins on the next page. KW contact branding is added in a separate footer area and does not replace the supplier's instructions, specifications or warranty terms.

Official supplier source: https://moffat.global.ssl.fastly.net/sites/default/files/products/manual/Waldorf_BPX8080_8120E_EE_228687-15_OM_A

Waldorf®
800 SERIES

Installation and Operation Manual

Electric Bratt Pan

BP8080E	BPL8080E	BPB8080E	BPLB8080E
BP8080EE	BPL8080EE	BPB8080EE	BPLB8080EE
BP8120E	BPL8120E	BPB8120E	BPLB8120E
BP8120EE	BPL8120EE	BPB8120EE	BPLB8120EE

Date Purchased

Serial Number

Dealer

Service Provider

For use in GB & IE

228687-15

KW COMMERCIAL KITCHEN
Distributed by KW Commercial Kitchen | 1300 001 366
www.kwcommercial.com.au | sales@kwcommercial.com.au

MANUFACTURED BY

Moffat Limited
Rolleston 7675
New Zealand

INTERNATIONAL CONTACTS

AUSTRALIA

Moffat Pty Limited

Web:	www.moffat.com.au
E.Mail:	vsales@moffat.com.au
Main Office:	(tel) +61 (03) 9518 3888
	(fax) +61 (03) 9518 3833
Service:	(tel): 1800 622 216
Spares:	(tel): 1800 337 963
Customer Service:	(tel): 1800 335 315
	(fax): 1800 350 281

CANADA

Serve Canada

Web:	www.servecanada.com
E.Mail:	info@servecanada.com
Sales:	(tel): 800 551 8795 (Toll Free)
Service:	(tel): 800 263 1455 (Toll Free)

NEW ZEALAND

Moffat Limited

Web:	www.moffat.co.nz
E.Mail:	sales@moffat.co.nz
Main Office:	(tel): 0800 663328

UNITED KINGDOM

Blue Seal

Web:	www.blue-seal.co.uk
E.Mail:	sales@blue-seal.co.uk
Sales:	(tel): +44 121 327 5575
	(fax): +44 121 327 9711
Spares:	(tel): +44 121 322 6640
	(fax): +44 121 327 9201
Service:	(tel): +44 121 322 6644
	(fax): +44 121 327 6257

UNITED STATES

Moffat

Web:	www.moffat.com
Sales:	(tel): 1-800 551 8795 (Toll Free)
	(tel): 336 661 1556
	(fax): 336 661 9546
Service:	(tel): 866 673 7937 (Toll Free)

REST OF WORLD

Moffat Limited

Web:	www.moffat.co.nz
E.Mail:	export@moffat.co.nz

The reproduction or copying of any part of this manual by any means whatsoever is strictly forbidden unless authorized previously in writing by the manufacturer.

In line with policy to continually develop and improve its products, Moffat Ltd. reserves the right to change the specifications and design without prior notice.

© Copyright Moffat Ltd. July 2016.

Waldorf Electric Bratt Pan

BP(L)(B)**8080E Bratt Pan Manual Tilt, (80 ltr)**
BP(L)(B)**8080EE Bratt Pan Electric Tilt, (80 ltr)**
BP(L)(B)**8120E Bratt Pan Manual Tilt, (120 ltr)**
BP(L)(B)**8120EE Bratt Pan Electric Tilt, (120 ltr)**

Introduction **2**

Specifications **3**
Model Numbers Covered in this Specification
General
Electrical Supply Requirements
Electrical Connection
Water Supply Requirements
Dimensions

Installation **9**
Installation Requirements
Unpacking
Location
Clearances
Assembly
Electrical Connection
Water Connection
Commissioning

Operation **12**
Operation Guide
Description of Controls
Turning 'On' the Main Element and Setting the Desired Temperature
Water
Tilting the Pan
Turning 'Off' the Main Element

Cleaning and Maintenance **15**
General
After Each Use
Daily Cleaning
Weekly Cleaning
Periodic Maintenance

Fault Finding **17**

Wiring Schematic **18**

Replacement Parts List **20**

Introduction

We are confident that you will be delighted with your WALDORF ELECTRIC BRATT PAN, and it will become a most valued appliance in your commercial kitchen.
To ensure you receive the utmost benefit from your new WALDORF Appliance, there are two important things you can do.

Firstly:

Please read the instruction book carefully and follow the directions given. The time taken will be well spent.

Secondly:

If you are unsure of any aspect of the installation, instructions or performance of your appliance, contact your WALDORF dealer promptly. In many cases a phone call could answer your question.

CE Only:

These instructions are only valid if the country code appears on the appliance. If the code does not appear on the appliance, refer to the supplier of this appliance to obtain the technical instructions for adapting the appliance to the conditions for use in that country.

WARNING:

IMPROPER INSTALLATION, ADJUSTMENT, ALTERATION, SERVICE OR MAINTENANCE CAN CAUSE PROPERTY DAMAGE, INJURY OR DEATH. READ THE INSTALLATION, OPERATING AND MAINTENANCE INSTRUCTIONS THOROUGHLY BEFORE INSTALLING OR SERVICING THIS APPLIANCE.

WARNING:

GREAT CARE MUST BE TAKEN BY THE OPERATOR TO USE THE EQUIPMENT SAFELY TO GUARD IT AGAINST RISK OF FIRE:-

- **THE APPLIANCE MUST NOT BE LEFT ON UNATTENDED.**
- **IT IS RECOMMENDED THAT A REGULAR INSPECTION IS MADE BY A COMPETENT SERVICEMAN TO ENSURE CORRECT AND SAFE OPERATION OF YOUR APPLIANCE IS MAINTAINED.**
- **DO NOT STORE OR USE GASOLINE OR OTHER FLAMMABLE VAPOURS OR LIQUIDS IN THE VICINITY OF THIS OR ANY OTHER APPLIANCE.**
- **DO NOT SPRAY AEROSOLS IN THE VICINITY OF THIS APPLIANCE WHILE IT IS IN OPERATION.**

CAUTION:

This appliance is;

- **For professional use and is to be used by qualified persons only.**
- **Only qualified service persons are to carry out installation and servicing operations.**
- **Components having adjustments protected (e.g. paint sealed) by the manufacturer should not be adjusted by the user / operator.**
- **DO NOT operate the appliance without the legs supplied fitted.**

KW COMMERCIAL KITCHEN
Distributed by KW Commercial Kitchen | 1300 001 366
www.kwcommercial.com.au | sales@kwcommercial.com.au

Model Numbers Covered in this Specification

BP[1]8080E/EE - Electric Bratt Pan Manual/Electric Tilt, 900 mm wide (80 ltr).
BP[1]8120E/EE - Electric Bratt Pan Manual/Electric Tilt,1200 mm wide (120 ltr).

NOTE:
[1]: - Model Options;
- - Standard.
L - Low Back.
B - Bold Front.
LB - Low Back and Bold Front.

General

BP8080E / EE (80 ltr) Models.
A commercial heavy duty, electric fired Bratt Pan fitted with an 80 ltr capacity pan, of full stainless steel pan construction, with 3 x 4 kW stainless steel sheathed elements clad to the pan base giving even heat distribution. This appliance features an electric thermostat burner control and over temperature safety cut-out.

Created for compact modular kitchens, it is fitted with manual (BP8080E models) or electrical (BP8080EE) operated tilting mechanism with burner cut-out when the pan is tilted.

BP8120E / EE (120 ltr) Models.
A commercial heavy duty, electric fired Bratt Pan fitted with an 120 ltr capacity pan, of full stainless steel pan construction, with 3 x 5.66 kW stainless steel sheathed elements clad to the pan base giving even heat distribution. This appliance features an electric thermostat burner control and over temperature safety cut-out.

Created for compact modular kitchens, it is fitted with manual (BP8120E models) or electrical (BP8120EE models) operated tilting mechanism with burner cut-out when the pan is tilted.

Electrical Supply Requirements

BP8080E/EE - 12kW. 400-415V ac, 50/60Hz, 3P+N+E, 12.0 kW @ 415 V.
Phase loading; L1 = 16.4 A.
L2 = 16.4 A.
L3 = 16.4 A.

BP8120-E/EE - 17kW. 400-415V ac, 50/60Hz, 3P+N+E, 17.0 kW @ 415 V.
Phase loading; L1 = 23.2 A.
L2 = 23.2 A.
L3 = 23.2 A.

Electrical Connection

WARNING:

THIS APPLIANCE MUST BE EARTHED. IF THE SUPPLY CORD IS DAMAGED, IT MUST BE REPLACED BY A SUITABLY QUALIFIED PERSON IN ORDER TO AVOID A HAZARD.

When connecting a Waldorf electric appliance to the main supply, ensure that the following is carried out:-

- An isolating switch is fitted within 2 m of the appliance, but not on the appliance and in such a position that the user does not have to reach across the cooking surface.
- Supply cord shall be oil-resistant, sheathed flexible cable and not lighter than ordinary polychloroprene or other equivalent synthetic elastomer sheathed cord (as per AS / NZS 3191 part 2.10.11. or IEC 60245-IEC-57) e.g. HO5 RN-F Type.
- The branch supply line shall be individually overload protected to the correct current rating and the supply chord shall be protected against any mechanical or thermal damage.
- A grommet is fitted around the wiring entry hole into the appliance.
- All wiring connections must be tight.

Refer to the appropriate wiring standards for the size of cable that is to be supplied to an appliance for the current drawn on that line.

Electrical supply connection point is located at the rear of the appliance, approximately 87 mm from the left hand side, 557 mm from the rear and 335 mm (290 mm for BP8120E/EE) from the floor.

KW COMMERCIAL KITCHEN
Distributed by KW Commercial Kitchen | 1300 001 366
www.kwcommercial.com.au | sales@kwcommercial.com.au

Water Supply Requirements

Cold water connection is $^{1}/_{2}$" tube connection via 15 mm crox fitting located 280 mm from the LH side, 575 mm from rear and 241 mm from the floor.

The water supply must be protected by an 'In-Line' sediment filter / strainer, which should be fitted into the pipeline prior to the Bratt Pan water connection.

Maximum water supply pressure 550kPa (80psi).

Maximum water inlet temperature - 80°C.

KW COMMERCIAL KITCHEN
Distributed by KW Commercial Kitchen | 1300 001 366
www.kwcommercial.com.au | sales@kwcommercial.com.au

Dimensions BP(L)8080E Model Only

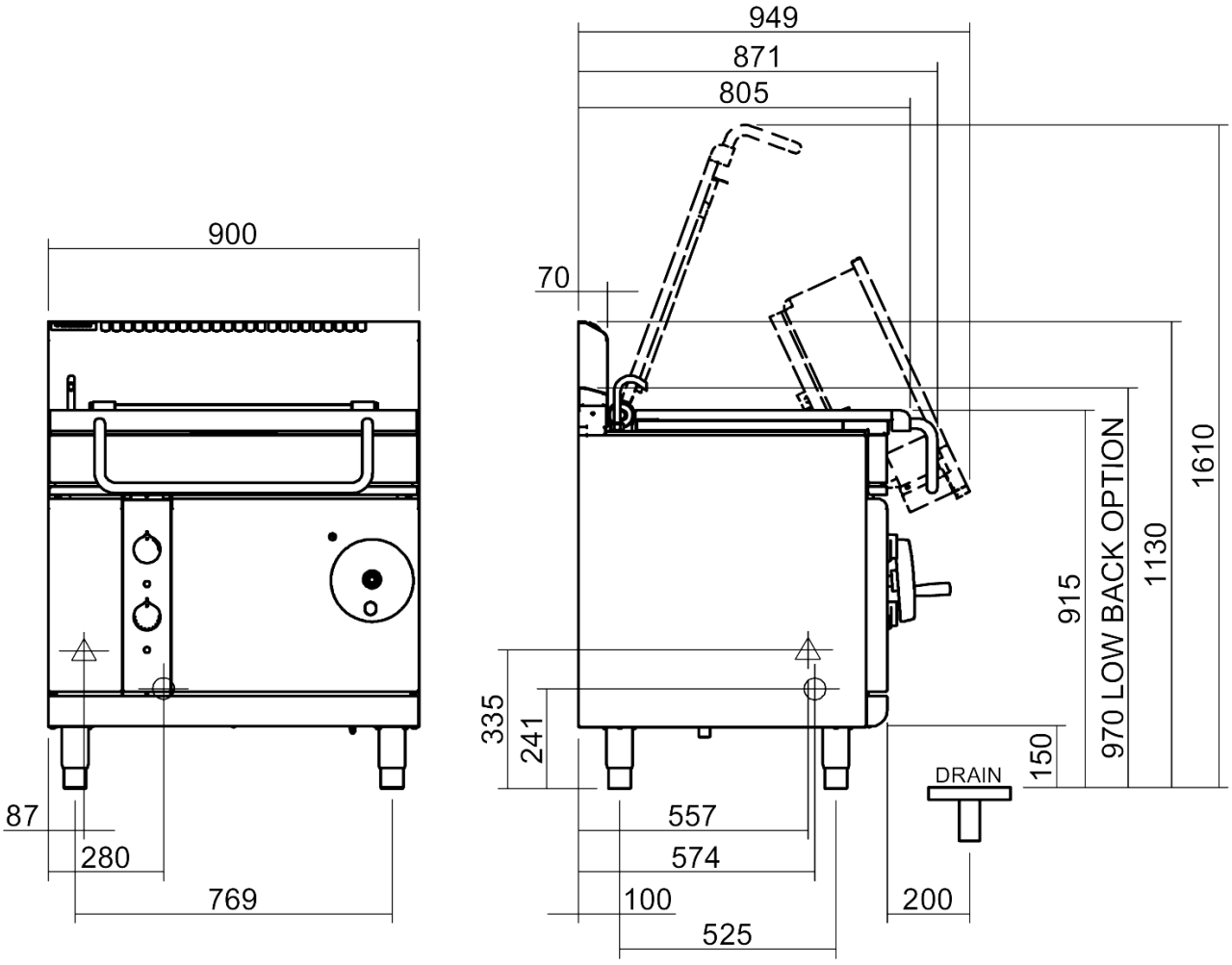

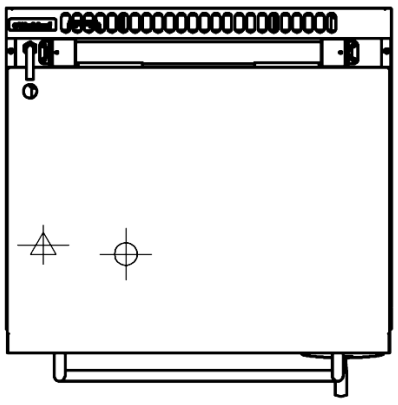

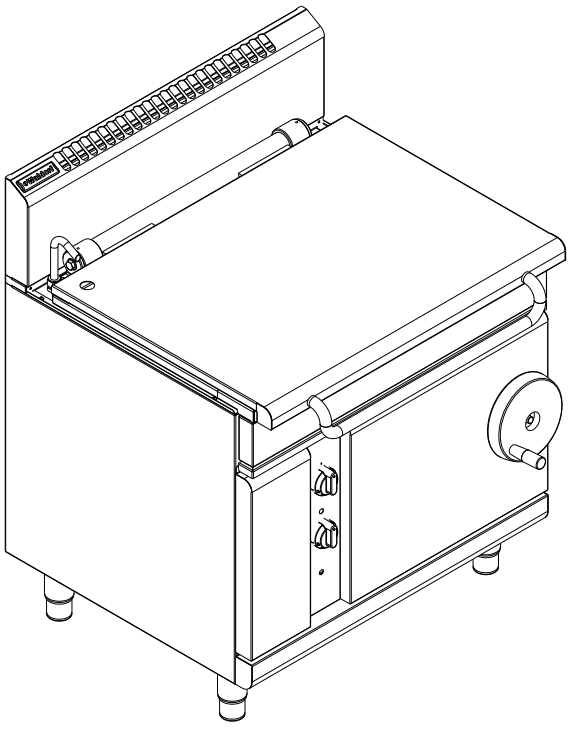

= WATER CONNECTION POINT.

= ELECTRICAL CONNECTION POINT.

Distributed by KW Commercial Kitchen | 1300 001 366
www.kwcommercial.com.au | sales@kwcommercial.com.au

Dimensions BP(L)8080EE Model Only

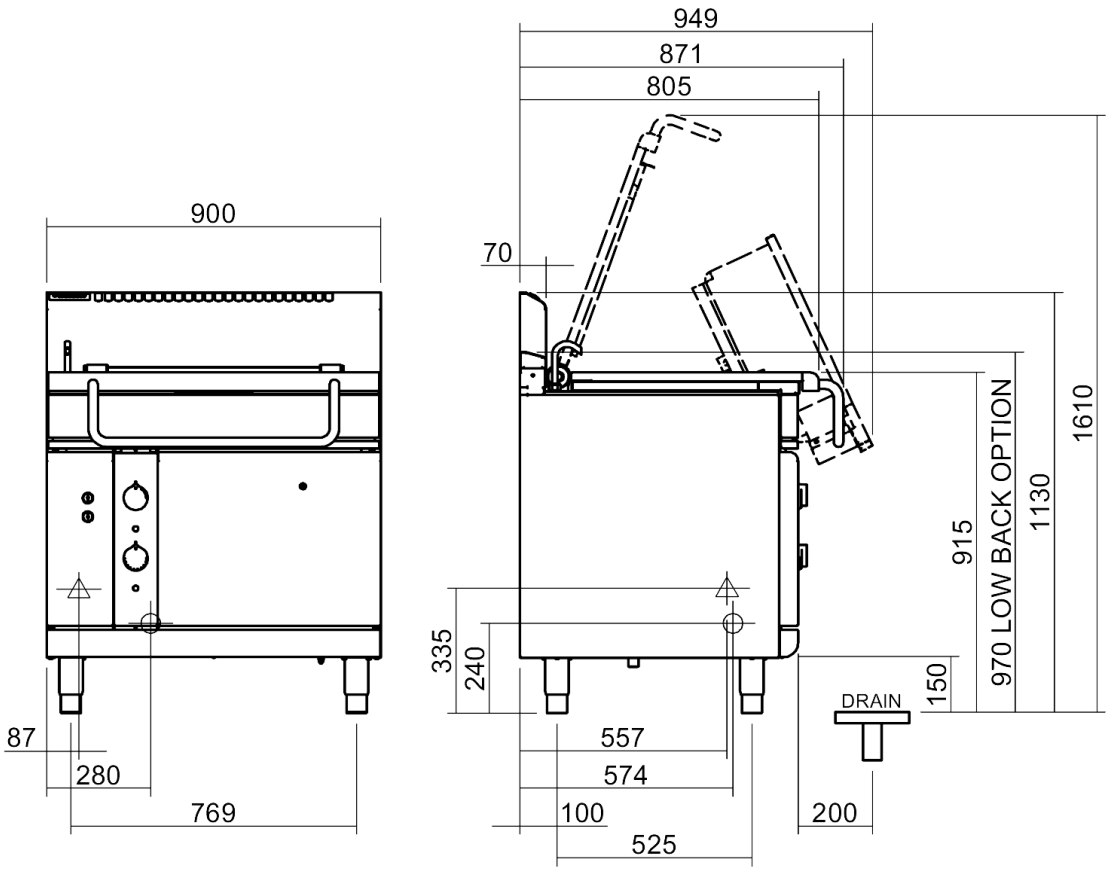

= WATER CONNECTION POINT.

= ELECTRICAL CONNECTION POINT.

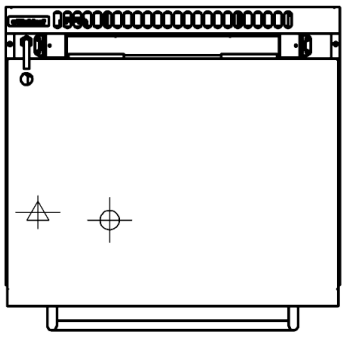

Distributed by KW Commercial Kitchen | 1300 001 366
www.kwcommercial.com.au | sales@kwcommercial.com.au

Dimensions BP(L)8120E Model Only

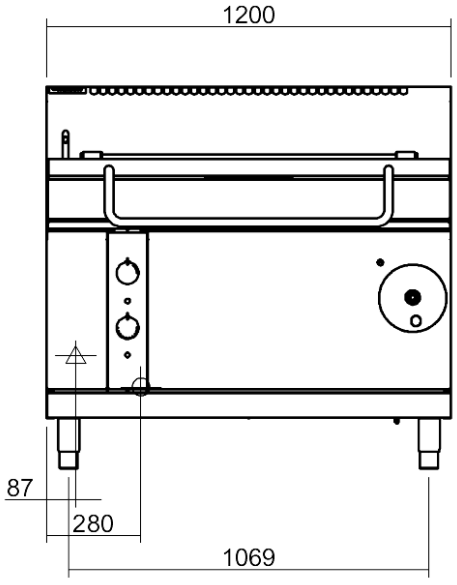

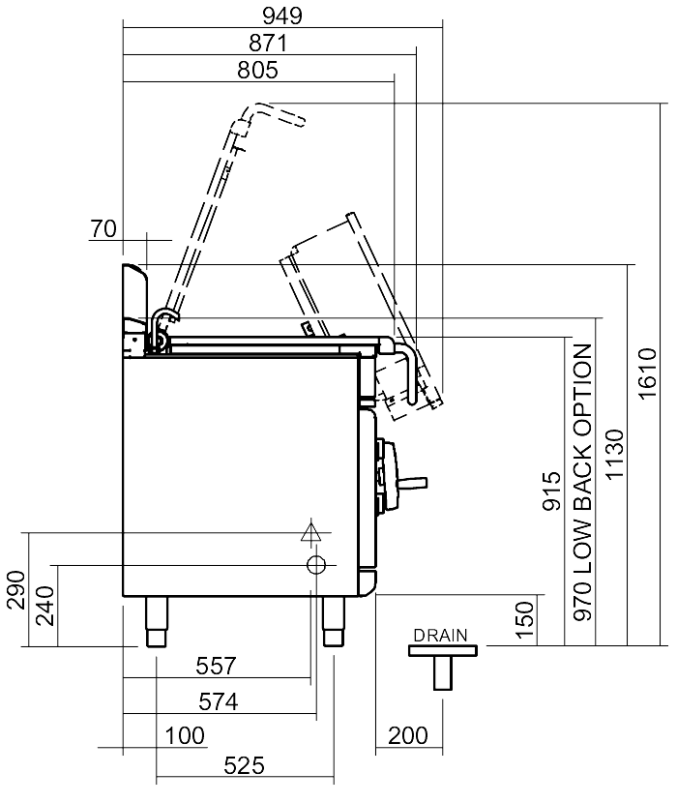

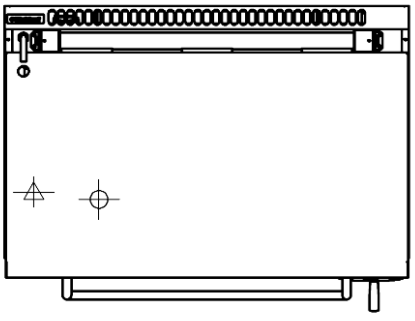

= ELECTRICAL CONNECTION POINT.

= WATER CONNECTION POINT.

Distributed by KW Commercial Kitchen | 1300 001 366
www.kwcommercial.com.au | sales@kwcommercial.com.au

Dimensions BP(L)8120EE Model Only

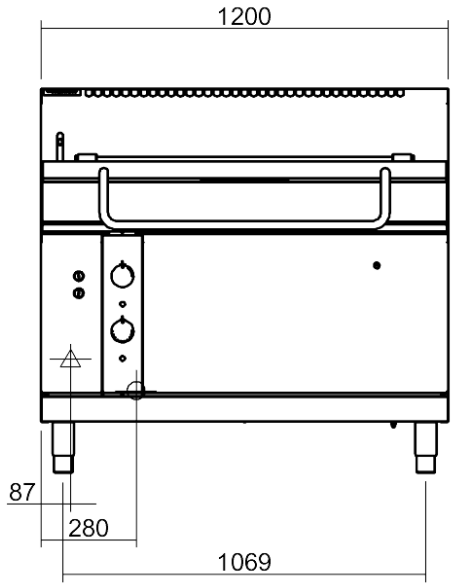

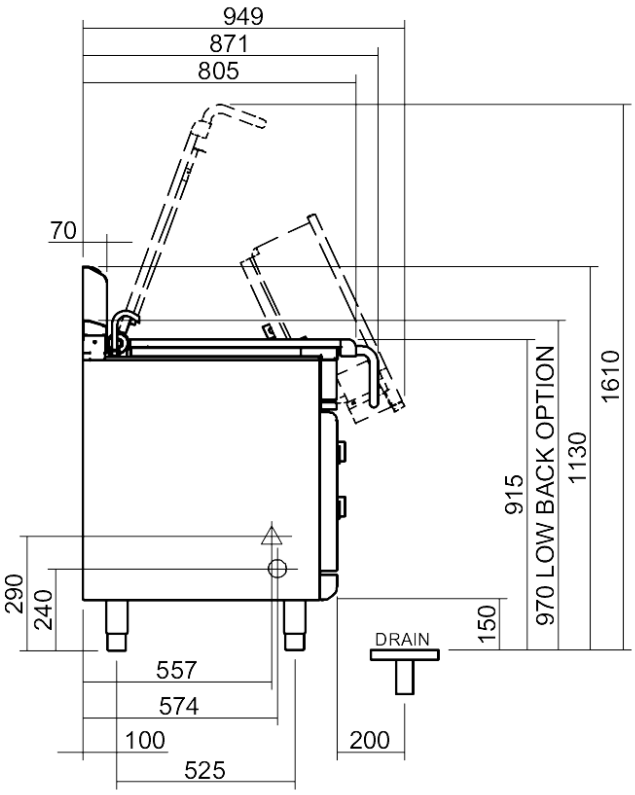

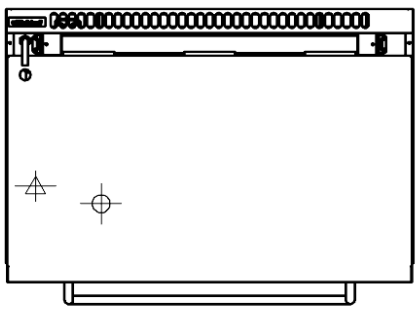

= WATER CONNECTION POINT.

= ELECTRICAL CONNECTION POINT.

Distributed by KW Commercial Kitchen | 1300 001 366
www.kwcommercial.com.au | sales@kwcommercial.com.au

Installation Requirements

NOTE:

- **It is most important that this appliance is installed correctly and that operation is correct before use. Installation shall comply with local electrical and health and safety requirements.**
- **This appliance shall be installed with sufficient ventilation to prevent the occurrence of unacceptable concentrations of health harmful substances in the room, the appliance is installed in.**

Waldorf Bratt Pans are designed to provide years of satisfactory service and correct installation is essential to achieve the best performance, efficiency and trouble-free operation.
This appliance must be installed in accordance with National installation codes and in addition, in accordance with relevant National / Local codes covering electrical, fire and health and safety.

Australia / New Zealand:	AS / NZS 3000	- Wiring Rules.
	AS / NZS 3500	- Plumbing and Drainage.
United Kingdom:	BS 7671	- Requirements for Electrical Installations.

Installations must be carried out by authorised persons only. Failure to install equipment to the relevant codes and manufacturer's specifications shown in this section will void the warranty.

Components having adjustments protected (e.g. paint sealed) by the manufacturer are only to be adjusted by an authorised service agent. They are not to be adjusted by the installation person.

Unpacking

1. Remove all packaging and transit protection from the appliance including all protective plastic coating from the exterior stainless steel panels.
2. Check equipment and parts for damage. Report any damage immediately to the carrier and distributor.
3. Report any deficiencies to the distributor who supplied the appliance.
4. Check that the available electrical supply is correct to that shown on the rating plate located on the bottom right hand corner of the bottom sill.

Location

1. Any appliance requires adequate clearance and ventilation for optimum and trouble-free operation. The following minimum installation clearances are to be adhered to:
2. Never directly connect a ventilation system to the appliance flue outlet.
3. Installation must include adequate ventilation means, to prevent dangerous build up of combustion products.
4. Position the Bratt Pan in its approximate working position.
5. The legs must always be fitted to the unit.

NOTE: Do not block or obstruct the appliance flue.

Clearances

NOTE: Only non-combustible materials can be used in close proximity to this appliance.

	Combustible Surface	Non Combustible Surface
Left / Right Hand Side (*)	50mm	0mm
Rear	50mm	0mm

(*) Side clearances can be 50mm when the adjacent surface is at least 100mm below the cooking surface.

KW COMMERCIAL KITCHEN
Distributed by KW Commercial Kitchen | 1300 001 366
www.kwcommercial.com.au | sales@kwcommercial.com.au

Assembly

CAUTION:

- **This appliance is for professional use and is to be used by qualified persons only.**
- **Only qualified service persons are to carry out installation and servicing of this appliance.**

NOTE:

- **This appliance must only be installed on the adjustable feet supplied. It must not be fitted with rear rollers or castors as this appliance is intended for stationary installations only.**
- **This appliance is fitted with adjustable feet to enable the appliance to be positioned securely and level. This should be carried out on completion of the electrical connection. Refer to the 'Electrical Connection' section.**

1. Check that all the feet are in place and are tightened firmly.
2. Roughly adjust the four feet to make the bratt pan steady and level.
3. To assemble the handle to the lid, unpack the handle assembly. Place the handle on the outside of the lid with the curved part of the handle facing downwards. (Refer to Fig 1).
4. Fit the bolts with spring washers and flat washers from the inside of the lid and tighten the bolts to secure the handle in position.

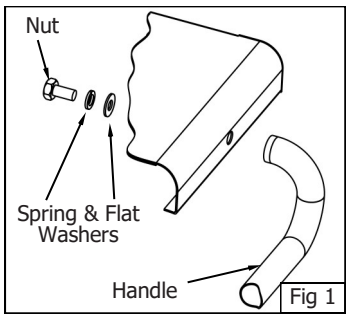

Fig 1

Electrical Connection

WARNING:

THIS APPLIANCE MUST BE EARTHED. IF THE SUPPLY CORD IS DAMAGED, IT MUST BE REPLACED BY A SUITABLY QUALIFIED PERSON IN ORDER TO AVOID A HAZARD.

NOTE: ALL ELECTRICAL CONNECTIONS MUST ONLY BE CARRIED OUT BY AN AUTHORISED PERSON.

Each appliance should be connected to an adequately protected power supply and an isolation switch mounted adjacent to, but not behind the appliance. This switch must be clearly marked and readily accessible in case of fire.

1. Check that the electricity supply is correct as shown on the Rating Plate attached to the lower front hand side of the front sill panel.
2. The supply terminal connections are located at the rear of the the appliance. Refer to 'Electrical Connections' in the 'Specifications' section of the manual.
3. Refer to the appropriate wiring standards for the size of cable that is to be used for the current drawn on that line.
4. When connecting a Waldorf electric appliance to the main supply, ensure that the following is carried out:-
   - An isolating switch is fitted nearby and accessible.
   - Supply wires are the correct size for the current drawn.
   - The fuse('s) on the wall are the correct current rating.
   - A grommet is fitted around the wiring entry holes into the appliance.
   - Wiring connection must be tight.

Fig 2

5. Remove the front panel and control panel to allow connection access for the electrical supply.
6. Connect the mains supply to L1, L2 and L3 fuse carrier connections for 3 phases.
7. Connect neutral and earth conductors to neutral stud and earth stud respectively.
8. For all connections ensure that conductors are secure and appropriately terminated.

KW COMMERCIAL KITCHEN
Distributed by KW Commercial Kitchen | 1300 001 366
www.kwcommercial.com.au | sales@kwcommercial.com.au

NOTE:

- **This appliance must be grounded / earthed.**
- **Fixed wiring installations must incorporate an all-pole disconnection switch.**

9. Correctly locate the appliance into its final operating position and using a spirit level, adjust the legs so that the appliance is level and at the correct height.
10. Connect the power supply to the appliance.
11. Check that the electrical supply is as shown in 'Specifications' section of this manual.

Water Connection

NOTE:

- **The water supply must be protected by an 'In-Line' sediment filter / strainer, which should be fitted into the pipeline prior to the Bratt Pan water connection.**
- **All water pipework must be thoroughly flushed prior to completion of the installation procedure.**

Cold water mains ¾" BSP male thread connection point. For location details on services connections refer to the drawings in the 'Specification' section.

- **Maximum water supply pressure - 550kPa (80 psi).**
- **Maximum Water Supply Temperature - 80°C.**
- Remove the control panel for access to the cold water connection.

Commissioning

1. Before leaving the new installation;
   a. Check the following functions in accordance with the operating instructions specified in the 'Operation' section of this manual.
      - Ensure that all water pipework has been thoroughly flushed through prior to using the appliance.
      - Check the current draw and loading for the equipment. Refer specification section for correct electrical requirements.
      - Check that all the connections are correct and that all cover panels have been re-fitted.
      - Check that the appliance functions in accordance with the operating instructions.
      - Ensure that this instruction manual is left with the appliance.
      - Ensure that all the relevant details and contacts have been added to the front of this manual.

   b. Ensure that the operator has been instructed in the areas of correct operation and shutdown procedure for the appliance.

2. This manual must be kept by the owner for future reference and as a record of ***Date of Purchase, Date of Installation*** and ***Serial Number of the Unit*** recorded and kept with this manual. **(These details can be found on the Rating Plate attached to the bottom corner of the front right hand sill panel**. **Refer to the 'Electrical Connection' section)**.

NOTE:

- **If for some reason it is not possible to get the appliance to operate correctly, turn off the electrical power supply and contact a qualified service person. The supplier of this appliance will be able to recommend a suitable person.**
- **Make sure that the electrical supply is turned off before any service or maintenance work is carried out.**

KW COMMERCIAL KITCHEN
Distributed by KW Commercial Kitchen | 1300 001 366
www.kwcommercial.com.au | sales@kwcommercial.com.au

Operation Guide

CAUTION:

This appliance is;

- **Not suitable for shallow frying use.**
- **For professional use and is to be used by qualified persons only.**
- **Only qualified service persons are allowed to carry out installation and servicing of this appliance.**

1. Waldorf bratt pans have been designed to provide simplicity of operation and 100% safety protection.
2. Improper operation is therefore almost impossible, however bad operation practices can reduce the life of the bratt pan and produce a poor quality product. To use this bratt pan correctly please carefully read the following sections.

- Description of the Controls.
- Turning on the Heating Element.
- Setting the Temperature.
- Operating the Water Supply Valve.
- Tilting the Pan.
- Turning Off the Main Element.

CAUTION:

The pan lid and the ends of its handle close to the lid can become hot during operation of this appliance.

Description of Controls

BP8080E and BP8120E Models.

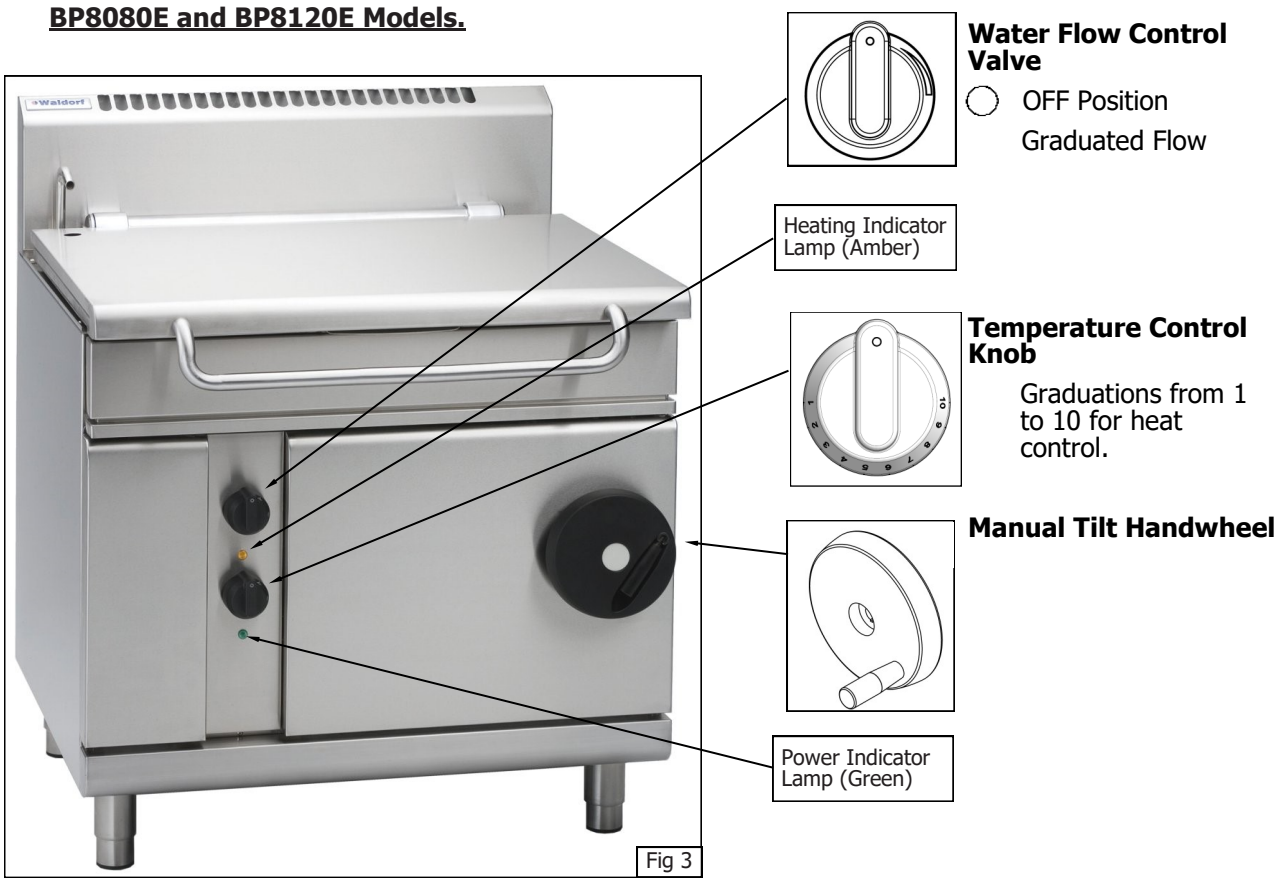

Fig 3

KW COMMERCIAL KITCHEN
Distributed by KW Commercial Kitchen | 1300 001 366
www.kwcommercial.com.au | sales@kwcommercial.com.au

BP8080EE and BP8120EE Models.

Fig 4

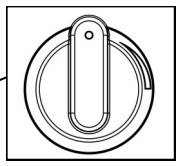

Water Flow Control Valve

OFF Position

Graduated Flow

Heating Indicator Lamp (Amber)

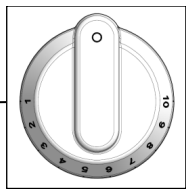

Temperature Control Knob

Graduations from 1 to 10 for heat control.

Power Indicator Lamp (Green)

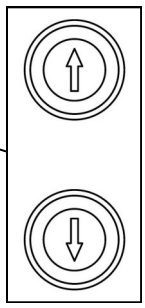

Electrical Tilt Controls

With the bratt pan lid open, the bratt pan can be electrically raised to the 'UP' position.

KW COMMERCIAL KITCHEN
Distributed by KW Commercial Kitchen | 1300 001 366
www.kwcommercial.com.au | sales@kwcommercial.com.au

Turning on the Main Element and Setting the Desired Temperature

1. Rotate the thermostat control knob anti-clockwise to the desired heat setting.
2. The main element will only operate when the pan is in the flat cooking position. Tilting the pan will automatically cut power to the main element.
3. Turn the thermostat control knob to the desired heat setting. The temperature will be thermostatically controlled at this selected heat setting.

Operating the Water Supply Valve

1. The temperature control thermostat should be turned ON to hold solenoid water supply valve open and allow water supply to the appliance.
2. To add water to the cooking product or for cleaning, turn the water tap anti-clockwise with the pan in the down position and the pan lid up.
3. The water flow can be controlled by adjusting the water tap position.

NOTE: A ¼ turn anti-clockwise is FULLY open.

Tilting the Pan

WARNING:

CHECK THAT THE PAN LID IS IN THE FULLY RAISED POSITION BEFORE TILTING THE PAN UP.

CHECK THAT THE SPACE BEHIND AND ON BOTH SIDES OF THE PAN IS CLEAR OF ANY OBSTRUCTIONS BEFORE TILTING THE PAN DOWN.

BP8080E and BP8120E Models

a. To tilt the pan, turn the pan tilt handle clockwise. The heating element will automatically switch 'Off' when the pan is raised.
b. With the pan returned to its down lowered, the heating element will turn back 'On'.

BP8080EE and BP8120EE Models

a. To tilt the pan up or down, depress the pan tilt control switches on the front panel, with the corresponding direction arrow marking and hold the pan tilt control switch depressed as long as required.
b. Releasing the switch will stop the tilt operation and the pan will rest in the chosen position.

NOTE: The electric lift mechanism will only operate if the pan lid is in the raised position.

Turning 'Off' the Main Element

1. To turn 'Off' the main element, set the thermostat control knob to the 'OFF' position. The main element will now switch 'Off'.

KW COMMERCIAL KITCHEN
Distributed by KW Commercial Kitchen | 1300 001 366
www.kwcommercial.com.au | sales@kwcommercial.com.au

General

CAUTION:

Always turn off the electrical supply before commencing any cleaning.
This appliance is not water proof.
Do Not use water jet spray to clean interior or exterior of this appliance.

Clean the bratt pan regularly. A clean appliance looks better, will last longer and will perform better. A dirty cooking surface will hinder the transfer of heat from the cooking surface to the food. This will result in loss of cooking efficiency.

CAUTION:

If cleaning detergents are allowed to enter the inner parts of the appliance, rusting will occur on the pipe work, installation elements, heating elements and electrical components, this will cause premature failure of the appliance.

NOTE:

- **DO NOT clean the appliance using high pressure water or steam jets.**
- **DO NOT pour water directly over the appliance.**
- **DO NOT use wire brushes. Clean the pan regularly after each use.**
- **DO NOT use combustible liquids to clean the appliance.**
- **DO NOT use harsh abrasive detergents, sharp scrapers, strong solvents or caustic detergents as they will damage the appliance.**
- **DO NOT use any chloric or bleaching detergents to clean the appliance.**
- **DO NOT use saline or sulfuric acid preparations for descaling the appliance.**
- **Ensure that protective gloves are worn during the cleaning process.**
- **Clean the pan regularly after each use.**

After Each Use

Clean the interior of the pan regularly after each use. Do not use wire brushes on the pan. Clean using a mild detergent and a hot water solution using soft cloth or a soft bristled brush. Dry the appliance thoroughly using a dry clean cloth.

Clean the exterior of the bratt pan using a mild detergent and a hot water solution using soft cloth or a soft bristled brush.

Daily Cleaning

Clean the bratt pan control panel of the using a soft cloth moistened with a solution of mild detergent and hot water. DO NOT USE EXCESSIVE WATER. Dry the control panel thoroughly using a dry clean cloth.

Clean the interior and exterior of the bratt pan using a mild detergent and a hot water solution using soft cloth or a soft bristled brush. Do not use wire brushes on the pan. Dry the appliance thoroughly using a dry clean cloth.

Clean the control panel with a damp cloth lightly moistened with a solution of mild detergent and water. Wipe dry with a clean dry cloth.

KW COMMERCIAL KITCHEN
Distributed by KW Commercial Kitchen | 1300 001 366
www.kwcommercial.com.au | sales@kwcommercial.com.au

Weekly Cleaning

NOTE:

- **If the bratt pan usage is very high, we recommend that the weekly cleaning procedure is carried out on a more frequent basis.**
- **Ensure that protective gloves are worn during the cleaning process.**
- **DO NOT use harsh abrasive detergents, strong solvents, sharp scrapers or caustic detergents as they will damage the surface of the bratt pan.**
- **DO NOT use water on the elements while they are still hot as cracking may occur. Allow these items to cool prior to cleaning.**
- **DO NOT clean the elements in a dishwasher.**

Thoroughly clean the interior and exterior of the bratt pan regularly. Do not use wire brushes on the pan. Clean using a mild detergent and a hot water solution using soft cloth or a soft bristled brush. Dry the appliance thoroughly using a dry clean cloth.

NOTE: In order to prevent the forming of rust on the steel components, ensure that the detergent or cleaning material has been entirely removed after each cleaning process.

Stainless Steel Surfaces

a. Clean the interior and exterior surfaces of the bratt pan with hot water, a mild detergent solution and a soft scrubbing brush. Note that the control knobs are a push fit onto the thermostat and water control valve spindles and can be removed to allow cleaning of the front of the control panel.
b. Baked on deposits or discolouration may require a good quality stainless steel cleaner or stainless steel wool. Always apply cleaner when the appliance is cold and rub in the direction of the grain.
c. It should not be necessary to remove the manual tilt mechanism handwheel for cleaning purposes.
d. Dry all components thoroughly with a dry cloth and polish with a soft dry cloth.
e. To remove any discolouration, use an approved stainless steel cleaner or stainless steel wool. Always rub in the direction of the grain.

Periodic Maintenance

To achieve the best results, cleaning must be regular and thorough and all controls and mechanical parts checked and adjusted periodically by a competent serviceman. If any small faults occur, have them attended to promptly. Don't wait until they cause a complete breakdown. It is recommended that the appliance is serviced every 6 months.

KW COMMERCIAL KITCHEN
Distributed by KW Commercial Kitchen | 1300 001 366
www.kwcommercial.com.au | sales@kwcommercial.com.au

This section provides an easy reference guide to the more common problems that may occur during the operation of your equipment. The fault finding guide in this section is intended to help you correct, or at least accurately diagnose problems with your equipment.

Although this section covers the most common problems reported, you may encounter a problem not covered in this section. In such instances, please contact your local authorised service agent who will make every effort to help you identify and resolve the problem. Please note that the service agent will require the following information:-

- **The Model Trade Name and the Serial Number of the Appliance. (both can be found on the Technical Data Plate located on the appliance. (Refer to the 'Dimensions' section).**

Fault	Possible Cause	Remedy
Over-temperature thermostat cuts out.	Over-temperature thermostat faulty.	If the main element turns 'Off' and the power indicator light also drops below 320ºC, replace the over-temperature thermostat.
	Control thermostat not maintaining a set temperature. a. Thermostat out of calibration. b. Thermostat does not open on temperature rise.	Check continuity through the thermostat leads, on temperature rise. If the circuit does not open, replace the thermostat.
	Thermostat opens on temperature rise but control valve does not respond.	Check connections to the heating element are correct. If correct, replace the heating element. Call service provider.
Main Element does not operate.	Check power is supplied to the unit.	Turn on the power.
	Check that the pan is flat and that the tilt microswitch is closed.	Adjust the microswitch so that the microswitch is activated when the pan is fully down in the flat (cooking position).
	Check that the thermostat setting is correct and that the control knob on the main element is set to the 'ON' position.	Replace the thermostat.
No pan filling water available. *(The manual water fill valve has an electrical solenoid isolating valve fitted to the supply side of the water supply plumbing in the appliance. The shut-off valve only opens water supply to the manual valve when the pan is in the down position and when the control thermostat is turned 'ON').*	With the pan in the down position, control thermostat turned 'ON' and main water supply 'ON', check that the solenoid valve has electrical power across its coil terminals. a. If solenoid coil has power, but no water available on turning the manual valve, check coil for open circuit, short circuit and for solenoid coil burn-out.	Replace the solenoid.
	b. If solenoid coil is satisfactory, disconnect water connection and check inlet filter screen for foreign matter blockage.	Clean and refit the inlet filter.
	c. If there is no voltage to solenoid coil.	Check for electrical fault in pan lift microswitch circuit. A fault here is likely to also cause main element to fail. Call service provider.

KW COMMERCIAL KITCHEN
Distributed by KW Commercial Kitchen | 1300 001 366
www.kwcommercial.com.au | sales@kwcommercial.com.au

BP8080E / BP8120E (Manual Tilt Models)

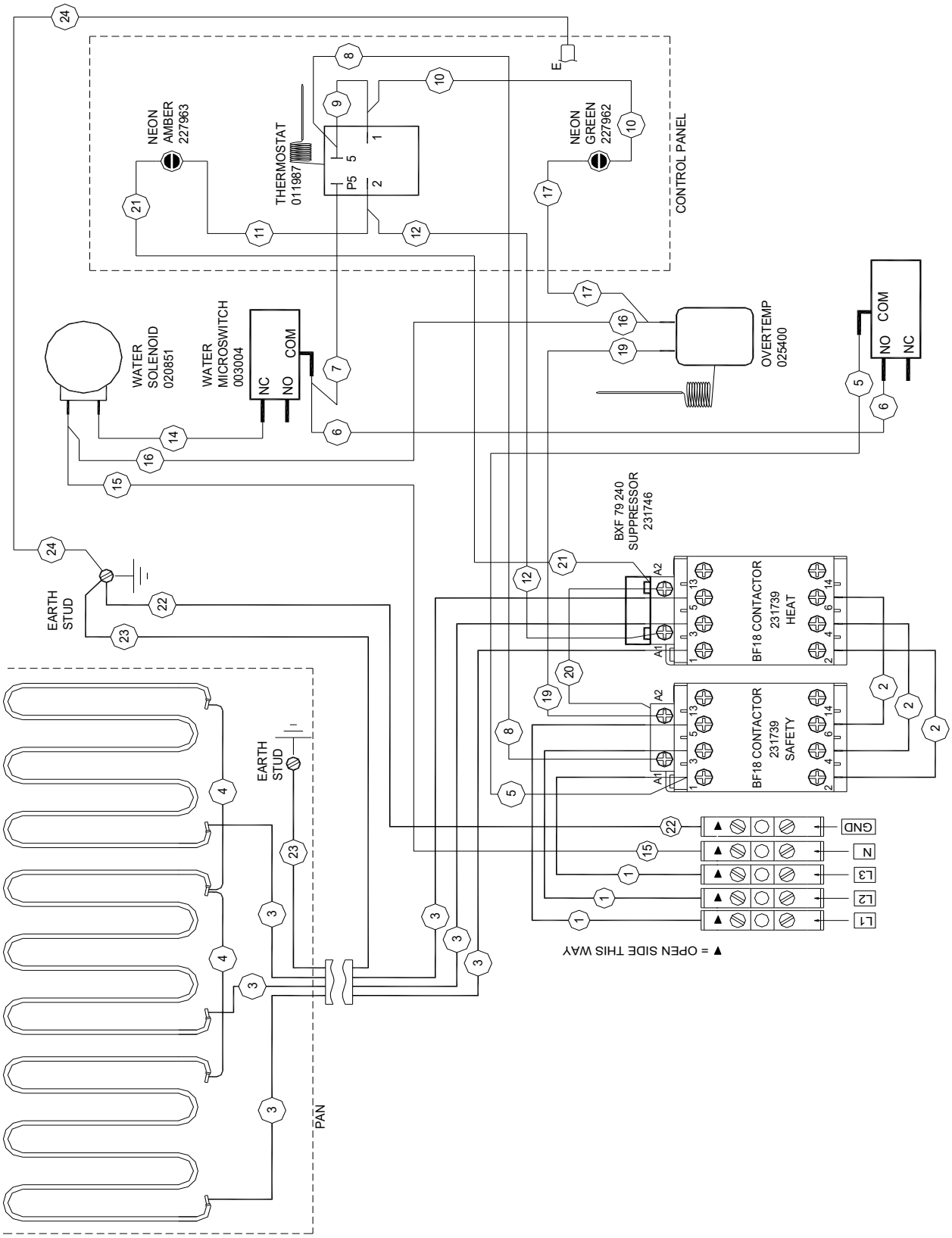

Distributed by KW Commercial Kitchen | 1300 001 366
www.kwcommercial.com.au | sales@kwcommercial.com.au

BP8080EE / BP8120EE (Electric Tilt Models)

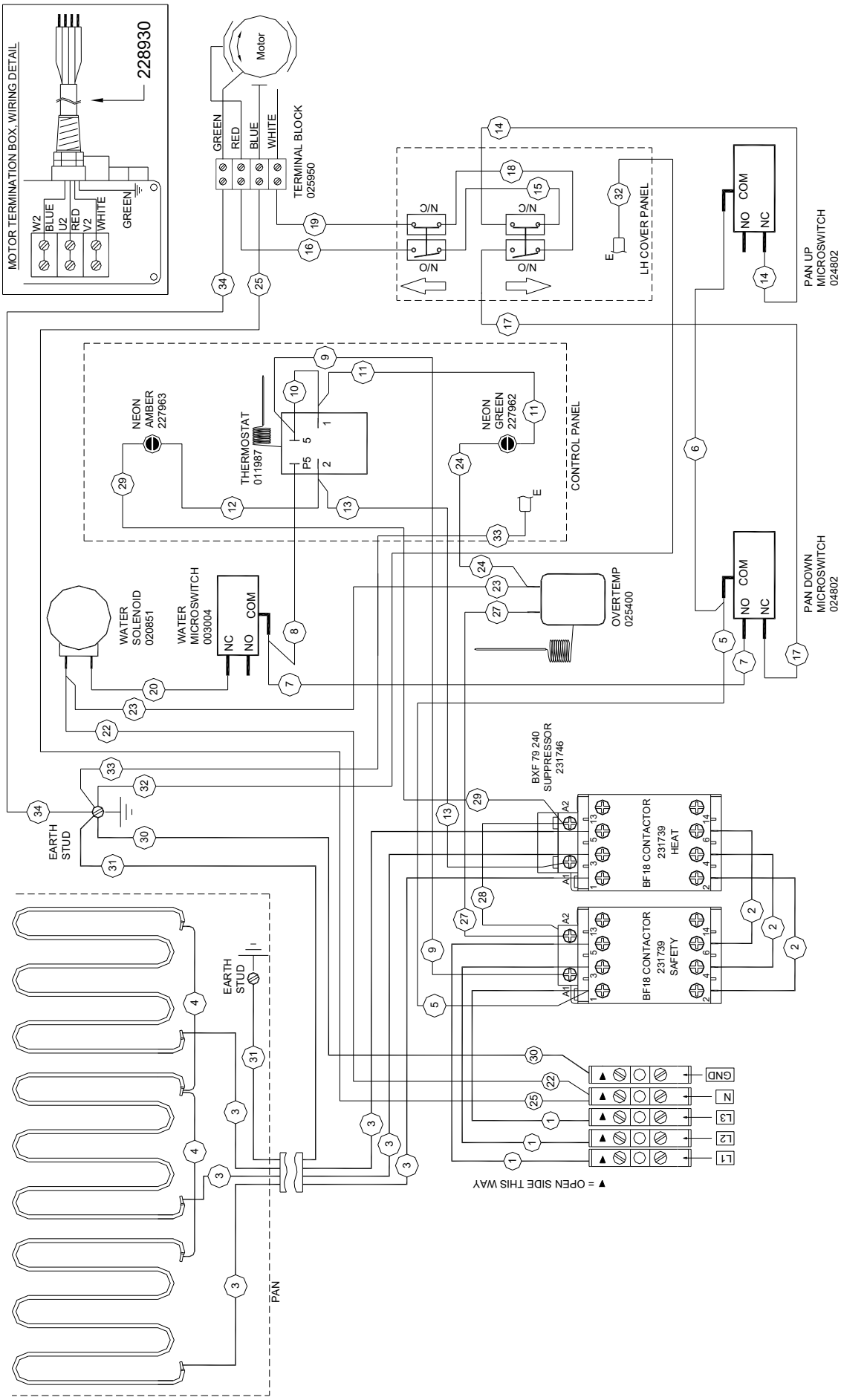

Distributed by KW Commercial Kitchen | 1300 001 366
www.kwcommercial.com.au | sales@kwcommercial.com.au

Replacement Parts List

IMPORTANT:

Only genuine authorized replacement parts should be used for the servicing and repair of this appliance. The instructions supplied with the parts should be followed when replacing components.
For further information and servicing instructions, contact your nearest authorized service branch (contact details are as shown on the reverse of the front cover of this manual).

When ordering replacement parts, please quote the part number and the description as listed below. If the part required is not listed below, request the part by description and quote Model and Serial Number which is shown on the rating plate.

Bratt Pan

240076	Element Kit (900mm Bratt Pan).
240077	Element Kit (1200mm Bratt Pan).
011987	Thermostat 50°C - 320°C.
025400	Over-Temp Thermostat.
231739	Contactor.
227963	Indicator Neon (Orange).
227962	Indicator Neon (Green).
024802	Microswitch (Bratt Pan Raise - Lower).
003004	Microswitch (Water Valve).
242085	Water Valve Kit (incl. Valve, Lever and Bracket)
020851	Water Solenoid Valve.
227848	Lid Handle (900mm Wide).
228849	Lid Handle (1200mm Wide).
228716	Lid Hinge Spring Kit.
227521	Tensioner Barrel.
228822	Thermostat Control Knob.
227387	Water Control Knob.
227857	Electric Motor (900mm & 1200mm EE Models Only).
020043	Bearing & Housing.
228123	Handwheel.
228117	Handwheel Spacer Bush.
N044400	Key Woodruff - $^{7}/_{8}$" x $^{5}/_{32}$".
044066	Handle Nut - M16 x 2.
227850	Leg Assembly.

Accessories

228798	Plinth Kit 900mm.
228802	Plinth Kit 1200mm.

KW COMMERCIAL KITCHEN
Distributed by KW Commercial Kitchen | 1300 001 366
www.kwcommercial.com.au | sales@kwcommercial.com.au