PRODUCT DOCUMENT PACK

Prepared and distributed by KW Commercial Kitchen

PRODUCT

Waldorf BP8080EE Electric Tilting Bratt Pan – 900mm

Model / SKU: BP8080EE

KW COMMERCIAL KITCHEN

7/72 Canterbury Road, Bankstown NSW 2200

Phone 1300 001 366

Email sales@kwcommercial.com.au

Web www.kwcommercial.com.au

Scan for the current KW product page

DOCUMENT NOTICE

The supplier document begins on the next page. KW contact branding is added in a separate footer area and does not replace the supplier's instructions, specifications or warranty terms.

Official supplier source: https://moffat.global.ssl.fastly.net/sites/default/files/products/specification/BP8080E_BP8080EE_AN.pdf

Waldorf 800 SERIES

Technical data sheet for

ELECTRIC TILTING BRATT PAN 900mm

BP8080E, BP8080EE

BP8080E

- 80L full stainless steel pan
- Manually operated tilting mechanism
- Optional electric power tilting mechanism
- Heavy-duty lid and hinge system
- Galvanized steel chassis
- Stainless steel exterior
- Easy clean
- Easy service
- Fully modular
- Low back models (BPL) available

Overall Construction

- Heavy-duty galvanized steel chassis
- Splashback and side panels 1.2mm 304 stainless steel
- Front panels 0.9mm 304 stainless steel
- Full stainless steel pan with 2.0mm pan body
- 12mm thick stainless steel even heat pan base
- Large capacity pouring spout
- Heavy-duty spring balanced lid hinge system
- 1.5mm 304 stainless steel lid suitable as bench-top workspace
- Full width stainless steel lid handle
- Manually operated pan lift handwheel with fold-away handle
- Electrically powered pan tilting option
- 63mm dia. heavy-duty stainless steel legs with adjustable feet

Controls

- Large easy use control knobs - heat resistant reinforced
- Easy view control settings on knobs
- Indicator lights for power and heating
- Quarter turn water valve control for ease of use
- 50-320°C thermostatic control
- Over temperature safety cut-out
- Fold away handle on manual pan tilt
- Pan up and down switches on electric pan tilt

Cleaning and Servicing

- Seamless full stainless steel pan with rounded corners
- Easy clean stainless steel exterior panels
- Easy connection access via front service panels
- Service friendly lid hinge system
- Access to all parts from front of unit

Technical data sheet for

ELECTRIC TILTING BRATT PAN 900mm

BP8080E, BP8080EE

Waldorf 800 SERIES

Specifications

Elements

3 x 4kw stainless steel sheathed heating elements clad to pan base

Electrical requirements

12kW

400-415Vac, 50/60Hz, 3P+N+E,

Phase loading

L1 17A

L2 17A

L3 17A

Pan

Cooking surface 780mm x 450mm, 3510cm2

215mm deep

Water connection

Cold water connection 270mm from side, 574mm from rear, and 252mm from floor

½" tube connection via 15mm crox fitting

550kpa, 80psi max water pressure

Electrical connection

60mm from LH side, 405mm from rear, and 150mm from floor

Dimensions

Width 900mm

Depth 805mm

Height 915mm

Incl. splashback 1130mm

Incl. low back 970mm

With lid open 1600mm

Nett weight

180kg

Packing data

1.03m3, 245kg

Width 945mm

Depth 870mm

Height 1255mm

Options at extra cost

Joining caps

Plinth mounting

BP8080E

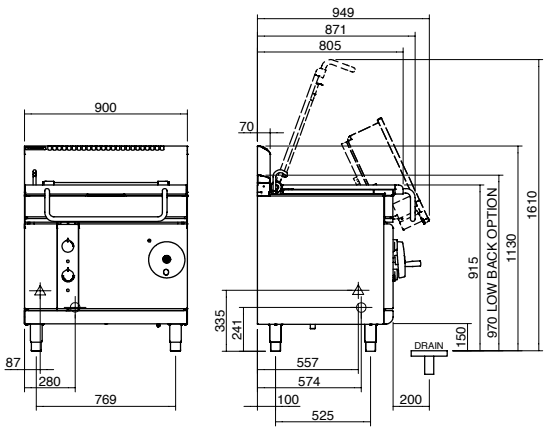

BP8080EE

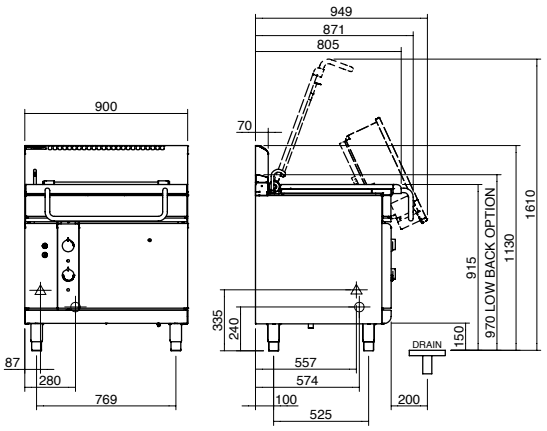

Plan

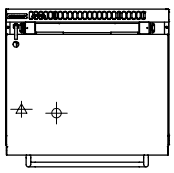

= ELECTRICAL CONNECTION POINT.

= WATER CONNECTION POINT.

MOFFAT

Australia
www.moffat.com.au
New Zealand
www.moffat.co.nz

Australia
Moffat Pty Limited

Victoria/Tasmania
740 Springvale Road
Mulgrave, Victoria 3170
Telephone 03-9518 3888
Facsimile 03-9518 3833
vsales@moffat.com.au

New South Wales
Telephone 02-8833 4111
nswsales@moffat.com.au

South Australia
Telephone 03-9518 3888
vsales@moffat.com.au

Queensland
Telephone 07-3630 8600
qldsales@moffat.com.au

Western Australia
Telephone 08-9202 6820
bgarcia@moffat.com.au

New Zealand
Moffat Limited

Christchurch
Telephone 03-389 1007
sales@moffat.co.nz

Auckland
Telephone 09-574 3150
sales@moffat.co.nz

24:7 Service Support

ISO9001 Quality Management Standard

Designed and manufactured by MOFFAT

ISO9001
All Waldorf products are designed and manufactured by Moffat using the internationally recognised ISO9001 quality management system, covering design, manufacture and final inspection, ensuring consistent high quality at all times.

In line with policy to continually develop and improve its products, Moffat Limited reserves the right to change specifications and design without notice.

Printed in New Zealand

© Copyright Moffat Limited

Moffat/BH/6864