PRODUCT DOCUMENT PACK

Prepared and distributed by KW Commercial Kitchen

PRODUCT

Waldorf 800 Series PC8140E - 450mm Electric Pasta Cooker

Model / SKU: PC8140E

KW COMMERCIAL KITCHEN

7/72 Canterbury Road, Bankstown NSW 2200

Phone 1300 001 366

Email sales@kwcommercial.com.au

Web www.kwcommercial.com.au

Scan for the current KW product page

DOCUMENT NOTICE

The supplier document begins on the next page. KW contact branding is added in a separate footer area and does not replace the supplier's instructions, specifications or warranty terms.

Official supplier source: https://moffat.global.ssl.fastly.net/sites/default/files/products/specification/PC8140E_E7_AN.pdf

Technical data sheet for

SINGLE PAN ELECTRIC PASTA COOKER 450mm

PC8140E, PC8140E7

- High performance single pan pasta cooker
  PC8140E 10.5kW 3 phase
  PC8140E7 7.0kW 1 phase
- Heavy-duty 3 coil Incoloy 825 element
- Easy clean 316 grade stainless steel open pan
- 40L water capacity
- Intergrated water fill and starch skimming water faucet
- Six stainless steel pasta baskets supplied standard
- Incorporated basket drain stand
- Safety cut out thermostat for empty pan/water boil out
- Stainless steel exterior
- Easy service
- Fully modular
- Low back models (RNL) available

Overall Construction

- Pan 1.5mm 316 stainless steel
- Bull nose welded 1.5mm 304 stainless steel
- Splashback 1.5mm 304 stainless steel
- Side panels 1.2mm 304 stainless steel
- Double skin door with 0.9mm 304 stainless exterior
- 25mm (1") skimming overflow and pan drains drain valve
- 150mm legs in 63mm dia. heavy-duty 1.2mm 304 stainless steel with adjustable feet
- 6 stainless steel baskets with moulded handle grips supplied standard (no lid on pasta cooker)
- 304 stainless steel wire basket support grid in pan

Controls

- Large easy to use knob - heat resistant reinforced
- 3 power settings (boil-simmer-standby)
- Mechanical thermostat
- Thermostat range 30°C - 110°C
- Fail safe over-temperature safety cut-out
- Element tilt switch for heating cut-out
- Indicator lights for power & heating
- Fine adjustment water faucet for pan filling and water refreshing/starch skimming

Cleaning and Servicing

- Open stainless steel pan for easy clean
- Hinged basket drain stand
- Removable basket support grid
- 25mm (1") drain valve for effective draining
- Easy clean stainless steel exterior
- Access to all parts from front of unit

Technical data sheet for

SINGLE PAN ELECTRIC PASTA COOKER 450mm

Specifications

Pan Size
Water capacity 40L
Width 365mm
Length 405mm
Basket immersion depth 165mm

Baskets
6 stainless steel perforated baskets with moulded plastic handles 125mm x 165mm x 180mm deep
Stainless steel wire basket support grid

Elements
1 x 10.5kW Incoloy 825 heating element (PC8140E)
1 x 7.0kW Incoloy 825 heating element (PC8140E7)

Electrical Requirements
PC8140E
10.5kW, 400-415V, 50/60Hz, 3P+N+E
L1 14.6A
L2 14.6A
L3 14.6A
PC8140E7
7.0kW, 220-240V, 50/60Hz, 1P+N+E
L1 29.2A

Electrical Connection
56mm from RH side, 541mm from rear and 489mm from floor

Water Connection
Cold water connection 50mm from left hand side, 556mm from rear and 140mm from floor
R1/2 (BSP) male

Drain Connection
Drain must be connected to system suitable for boiling water discharge
1" BSP Male connection 118mm from left hand side, 470mm from rear, and 165mm from floor

Dimensions
Width 450mm
Depth 805mm
Height 915mm
Incl. low back 970mm
Incl. splashback 1130mm

Packing data
0.53m3
Width 865mm
Depth 490mm
Height 1255mm

Options at extra cost
Extra baskets - 165mm square x 180mm deep
Optional rectangular baskets 320mm x 165mm x 180mm deep
Side splash guards
Joining caps
Castors
Plinth mounting

PC8140E

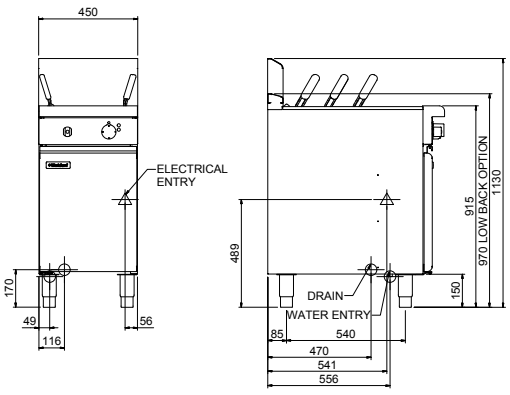

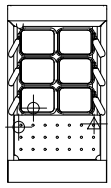

moffat.com.au
moffat.co.nz

Australia

Moffat Pty Limited

Victoria/Tasmania
740 Springvale Road
Mulgrave, Victoria 3170
Telephone +613-9518 3888
Facsimile +613-9518 3833
vsales@moffat.com.au

New South Wales
Telephone +612-8833 4111
nswsales@moffat.com.au

South Australia
Telephone +613-9518 3888
vsales@moffat.com.au

Queensland
Telephone +617-3630 8600
qldsales@moffat.com.au

Western Australia
Telephone +618-9413 2400
wasales@moffat.com.au

New Zealand

Moffat Limited

Rolleston
45 Illinois Drive
Izone Business Hub
Rolleston 7675
Telephone +64 3-983 6600
Facsimile +64 3-983 6660
sales@moffat.co.nz

Auckland
Telephone +64 9-574 3150
sales@moffat.co.nz

24:7 Service Support

ISO9001 Quality Management Standard

Designed and manufactured by

ISO9001
All Waldorf800 products are designed and manufactured by Moffat using the internationally recognised ISO9001 quality management system, covering design, manufacture and final inspection, ensuring consistent high quality at all times.

In line with policy to continually develop and improve its products, Moffat Limited reserves the right to change specifications and design without notice.

© Copyright Moffat Ltd

AN.W8.09/19

an Ali Group Company

The Spirit of Excellence