PRODUCT DOCUMENT PACK

Prepared and distributed by KW Commercial Kitchen

PRODUCT

Waldorf 800 Series RNL8400SE-CB- 600mm Electric Cooktop Sealed Hobs Low Back Vers

Model / SKU: RNL8400SE-CB

KW COMMERCIAL KITCHEN

7/72 Canterbury Road, Bankstown NSW 2200

Phone 1300 001 366

Email sales@kwcommercial.com.au

Web www.kwcommercial.com.au

Scan for the current KW product page

DOCUMENT NOTICE

The supplier document begins on the next page. KW contact branding is added in a separate footer area and does not replace the supplier's instructions, specifications or warranty terms.

Official supplier source: https://moffat.global.ssl.fastly.net/sites/default/files/products/specification/RN8400SE_an.pdf

Technical data sheet for

ELECTRIC COOKTOPS 600mm SEALED HOBS

RN8400SE-B, RN8400SE-LS, RN8400SE-CB

RN8400SE-LS

- Heavy-duty construction
- 2.6kW cast iron hot plate elements
- 3 models of base unit
- Stainless steel exterior
- Easy clean
- Easy service
- Fully modular
- Low back models (RNL) available

Overall Construction

Cooktop

- Welded hob with one-piece formed 2.0 304 stainless steel top
- Splashback and side panels 1.2mm 304 stainless steel
- Front panels 0.9mm 304 stainless steel
- 2.6kW cast iron hot plate elements with thermal protection
- Aluminised steel internal construction

Bench mount (supplied as –B model)

- Four 63mm dia. heavy-duty 1.2mm 304 stainless steel bench legs with adjustable feet
- Adjustable height 80mm – 105mm

Leg Stand (supplied as –LS model)

- Fully modular for matched suite finish
- Framed top for connection to Cooktop
- 63mm dia. heavy-duty 1.2mm 304 stainless steel legs with adjustable feet
- Fully modular framed stand shelf with 0.9mm 304 stainless steel finish
- Quick assembly design (no tools required)

Cabinet Base (supplied as –CB model)

- Fully modular for match suite finish
- Double skin 0.9mm 304 stainless steel interior and exterior
- Optional GN 1/1 4 position racking kit
- 63mm dia. heavy-duty 1.2mm 304 stainless steel legs with adjustable feet

Controls

- Large easy use control knob - heat resistant reinforced
- Easy view control settings on knob
- Cast iron hot plate elements with 6 heat position switch
- Power indicator light for each element control

Cleaning and Servicing

- All models with easy clean stainless steel external finish
- One-piece worktop with formed hob wells to contain spills
- Hinge up element and griddle sections
- Access to all parts from front of unit

Technical data sheet for

ELECTRIC COOKTOPS 600mm SEALED HOB

RN8400SE-B, RN8400SE-LS, RN8400SE-CB

Specifications

Cooktop

2.6 kW Cast Iron Hot Plate elements

Electrical requirements

RN8400SE

10.4 kW, 400-415Vac, 50/60Hz, 2P+N+E, 22A/phase

Electrical connection

130mm from RH side, 30mm from rear

70mm from bench height on bench models

675mm from floor on leg stand and cabinet base models

Dimensions

Bench models

Width 600mm

Depth 805mm

Height 315mm

Incl. splashback 530mm

Incl. low back 370mm

All models (excluding Bench model)

Width 600mm

Depth 805mm

Height 915mm

Incl. splashback 1130mm

Incl. low back 970mm

Nett weight

Bench and Leg Stand models

74kg

Cabinet Base models

79kg

Packing data

Bench and Leg Stand models

0.37m3, 110kg

Width 645mm

Depth 870mm

Height 665mm

Cabinet Base models

0.70m3, 131kg

Width 870mm

Depth 645mm

Height 1255mm

RN8400SE-B Bench Model

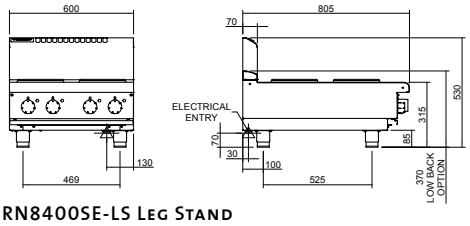

RN8400SE-LS Leg Stand

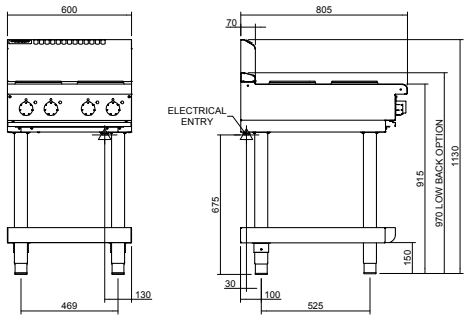

RN8400SE-CB Cabinet Base

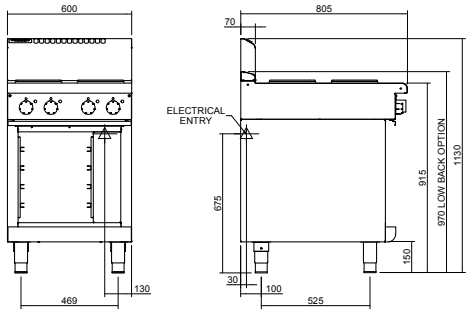

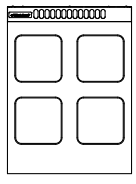

moffat.com.au
moffat.co.nz

Australia

Moffat Pty Limited

Victoria/Tasmania
740 Springvale Road
Mulgrave, Victoria 3170
Telephone +613-9518 3888
Facsimile +613-9518 3833
vsales@moffat.com.au

New South Wales
Telephone +612-8833 4111
nswsales@moffat.com.au

South Australia
Telephone +613-9518 3888
vsales@moffat.com.au

Queensland
Telephone +617-3630 8600
qldsales@moffat.com.au

Western Australia
Telephone +618-9413 2400
wasales@moffat.com.au

New Zealand

Moffat Limited

Rolleston
45 Illinois Drive
Izone Business Hub
Rolleston 7675
Telephone +64 3-983 6600
Facsimile +64 3-983 6660
sales@moffat.co.nz

Auckland
Telephone +64 9-574 3150
sales@moffat.co.nz

24:7 Service Support

ISO9001 Quality Management Standard

Designed and manufactured by

ISO9001
All Waldorf800 products are designed and manufactured by Moffat using the internationally recognised ISO9001 quality management system, covering design, manufacture and final inspection, ensuring consistent high quality at all times.

In line with policy to continually develop and improve its products, Moffat Limited reserves the right to change specifications and design without notice.

© Copyright Moffat Ltd
AN.W8.S.01.22

an Ali Group Company

The Spirit of Excellence