PRODUCT DOCUMENT PACK

Prepared and distributed by KW Commercial Kitchen

PRODUCT

Waldorf 800 Series RN8610SE- 900mm Electric Sealed Hobs Range Static Oven

Model / SKU: RN8610SE

KW COMMERCIAL KITCHEN

7/72 Canterbury Road, Bankstown NSW 2200

Phone 1300 001 366

Email sales@kwcommercial.com.au

Web www.kwcommercial.com.au

Scan for the current KW product page

DOCUMENT NOTICE

The supplier document begins on the next page. KW contact branding is added in a separate footer area and does not replace the supplier's instructions, specifications or warranty terms.

Official supplier source: https://moffat.global.ssl.fastly.net/sites/default/files/products/specification/RN8610SE_an.pdf

Technical data sheet for

ELECTRIC RANGE STATIC OVEN 900mm - SEALED HOBS

RN8610SE

RN8610SE

- Heavy-duty construction
- 2.6kW cast iron hot plate elements
- GN 2/1 6.5kW electric static oven
- Drop down door
- Stainless steel exterior
- Easy clean
- Easy service
- Fully modular
- Low back models (RNL) available

Overall Construction

- Galvanized steel chassis
- Welded hob with one-piece formed 2.0mm 304 stainless steel top
- Splashback and hob sides 1.2mm 304 stainless steel
- Front panels and oven sides 0.9mm 304 stainless steel
- 150mm legs in 63mm dia. heavy-duty 1.2mm 304 stainless steel with adjustable feet

Cooktop

- 2.6kW cast iron hot plate elements with thermal protection
- Aluminised steel internal construction

Oven

- Fully welded and vitreous enamelled oven liner
- GN 2/1 capacity with 4 position racking
- Heavy-duty easy remove heavy wire chrome rack supports
- Cast iron even heat oven sole plate
- 6.5kW heating elements
- Welded frame drop down door with heavy-duty spring hinge system
- 0.9mm 304 stainless steel door outer
- 1.0mm press formed vitreous enamelled door inner
- High density fibreglass insulated
- Stay cool stainless steel door handle with cast metal handle mounts
- Supplied with two chrome wire oven racks

Controls

- Large easy use control knob - heat resistant reinforced
- Easy view control settings on knob

Cooktop

- Cast iron hot plate elements with 6 heat position switch
- Power indicator light for each element control

Oven

- Separate temperature and top heat power regulation controls
- 50-320˚C thermostatic control
- Lo-Hi top heat control
- Indicator lights for power and heating

Cleaning and Servicing

- All models with easy clean stainless steel external finish
- One-piece worktop with formed hob wells to contain spills
- Removable oven racking and sole plate
- Easy clean vitreous enamel oven and door inner
- Door hinge spring adjustable on unit (door outer removed)
- Door disengages for lift off removal and increased service access
- Access to all parts from front of unit

Technical data sheet for

ELECTRIC RANGE STATIC OVEN 900mm - SEALED HOB

RN8610SE

Specifications

Cooktop

2.6 kW Cast Iron Hot Plate elements

Oven

4.5kW bottom heat element

2.0kW top heat element

Electrical requirements

RN8610SE 22.1kW

Electrical connection

22.1kW max

400-415Vac, 50/60Hz, 3P+N+E

L1 31.0A max

L2 31.0A max

L3 30.0A max

Oven Dimensions

Width 665mm

Depth 650mm

Height 400mm

Rack size 650mm x 600mm

Rack positions 4

Electrical connection

130mm from RH side, 30mm from rear, and 675mm from floor

Dimensions

Width 900mm

Depth 805mm

Height 915mm

Incl. splashback 1130mm

Incl. low back 970mm

Nett weight

195kg

Packing data

1.03m3, 260kg

Width 945mm

Depth 870mm

Height 1255mm

Options at extra cost

Joining caps

Castors

Plinth mounting

RN8610SE

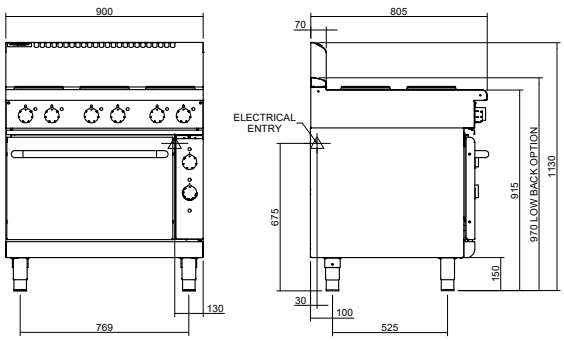

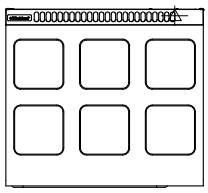

moffat.com.au
moffat.co.nz

Australia

Moffat Pty Limited

Victoria/Tasmania
740 Springvale Road
Mulgrave, Victoria 3170
Telephone +613-9518 3888
Facsimile +613-9518 3833
vsales@moffat.com.au

New South Wales
Telephone +612-8833 4111
nswsales@moffat.com.au

South Australia
Telephone +613-9518 3888
vsales@moffat.com.au

Queensland
Telephone +617-3630 8600
qldsales@moffat.com.au

Western Australia
Telephone +618-9413 2400
wasales@moffat.com.au

New Zealand

Moffat Limited

Rolleston
45 Illinois Drive
Izone Business Hub
Rolleston 7675
Telephone +64 3-983 6600
Facsimile +64 3-983 6660
sales@moffat.co.nz

Auckland
Telephone +64 9-574 3150
sales@moffat.co.nz

24:7 Service Support

ISO9001 Quality Management Standard

Designed and manufactured by

ISO9001
All Waldorf800 products are designed and manufactured by Moffat using the internationally recognised ISO9001 quality management system, covering design, manufacture and final inspection, ensuring consistent high quality at all times.

In line with policy to continually develop and improve its products, Moffat Limited reserves the right to change specifications and design without notice.

© Copyright Moffat Ltd

AN.W8.S.01.22

an Ali Group Company

The Spirit of Excellence