# PRODUCT DOCUMENT PACK

Prepared and distributed by KW Commercial Kitchen

## PRODUCT

## Waldorf 800 Series RN8114EC - 900mm Electric Solid Top Convection Oven Range

## Model / SKU: RN8114EC


### KW COMMERCIAL KITCHEN

7/72 Canterbury Road, Bankstown NSW 2200

Phone 1300 001 366

Email sales@kwcommercial.com.au

Web www.kwcommercial.com.au


Scan for the current KW product page

### DOCUMENT NOTICE

The supplier document begins on the next page. KW contact branding is added in a separate footer area and does not replace the supplier's instructions, specifications or warranty terms.

Official supplier source: https://moffat.global.ssl.fastly.net/sites/default/files/products/specification/RN8114EC_an.pdf

Technical data sheet for

# ELECTRIC RANGE CONVECTION OVEN 900mm - SOLID TOP

RN8114EC

RN8114EC

- Heavy-duty construction
- 10.8kW solid hot plate
- 750mm x 570mm cooking area
- Four independent heating zones (2.7kW)
- 16mm thick 16Mo3 chrome moly steel plate
- GN 2/1 6.5kW electric convection oven
- Drop down door
- Stainless steel exterior
- Easy clean
- Easy service
- Fully modular
- Low back models (RNL) available

## Overall Construction

- Galvanized steel chassis
- Welded hob with one-piece formed 2.0mm 304 stainless steel top
- Splashback and hob sides 1.2mm 304 stainless steel
- Front panels and oven sides 0.9mm 304 stainless steel
- 150mm legs in 63mm dia. heavy-duty 1.2mm 304 stainless steel with adjustable feet

### Cooktop

- 16mm thick 16Mo3 chrome moly plate
- Four radiant heating elements under plate
- Four independent heating zones
- Aluminised steel internal construction

### Oven

- Fully welded and vitreous enamelled oven liner
- GN 2/1 capacity with 4 position racking
- Heavy-duty easy remove heavy wire chrome rack supports
- Cast iron even heat oven sole plate
- 6.5kW heating elements
- 100W heavy-duty motor
- 200mm diameter heavy-duty circulation fan
- Welded frame drop down door with heavy-duty spring hinge system
- 0.9mm 304 stainless steel door outer
- 1.0mm press formed vitreous enamelled door inner
- High density fibreglass insulated
- Stay cool stainless steel door handle with cast metal handle mounts
- Supplied with two chrome wire oven racks

## Controls

- Large easy use control knob - heat resistant reinforced
- Easy view control settings on knob

### Cooktop

- Four 6 position switches for heating zones temperature control
- Power indicator light for each element control

### Oven

- 50-320˚C thermostatic control
- Indicator lights for power and heating

## Cleaning and Servicing

- All models with easy clean stainless steel external finish
- Removable stainless steel spill tray
- Removable oven racking and sole plate
- Easy clean vitreous enamel oven and door inner
- Door hinge spring adjustable on unit (door outer removed)
- Door disengages for lift off removal and increased service access
- Access to all parts from front of unit

Technical data sheet for

# ELECTRIC RANGE CONVECTION OVEN 900mm - SOLID TOP

RN8114EC

## Specifications

**Cooktop**

16mm thick 16Mo3 steel hot plate

750mm x 520mm plate area.

Four 2.7kW radiant heating elements under plate

**Oven**

4.5kW bottom heat element

2.0kW top heat element

**Oven Fan Motor**

100W

**Electrical requirements**

RN8114EC 17.3 kW

**Electrical connection**

17.3 kW max

400-415Vac, 50/60hz, 3P+N+E

L1 30.8A max

L2 22.4A max

L3 22.4A max

**Oven Dimensions**

Width 665mm

Depth 650mm

Height 400mm

Rack size 650mm x 600mm

Rack positions 4

**Electrical connection**

130mm from RH side, 30mm from rear, and 675mm from floor

**Dimensions**

Width 900mm

Depth 805mm

Height 915mm

Incl. splashback 1130mm

Incl. low back 970mm

**Nett weight**

198kg

**Packing data**

1.03m3, 263kg

Width 945mm

Depth 870mm

Height 1255mm

**Options at extra cost**

Castors

Plinth mounting

**RN8114EC**

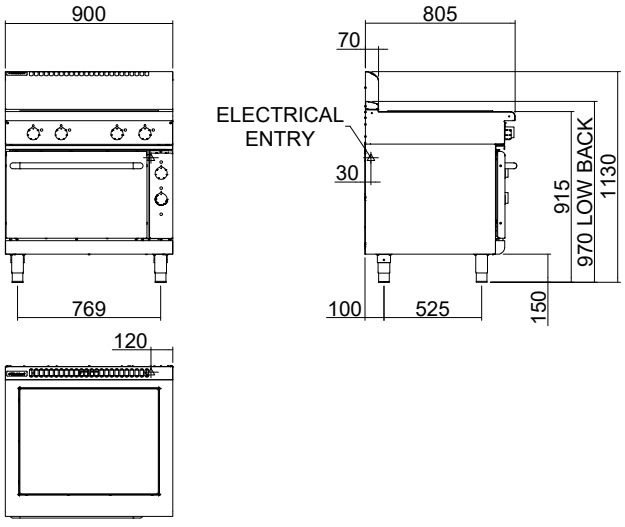



moffat.com.au
moffat.co.nz

**Australia**

**Moffat Pty Limited**

Victoria/Tasmania
740 Springvale Road
Mulgrave, Victoria 3170
Telephone +613-9518 3888
Facsimile +613-9518 3833
vsales@moffat.com.au

New South Wales
Telephone +612-8833 4111
nswsales@moffat.com.au

South Australia
Telephone +613-9518 3888
vsales@moffat.com.au

Queensland
Telephone +617-3630 8600
qldsales@moffat.com.au

Western Australia
Telephone +618-9413 2400
wasales@moffat.com.au

**New Zealand**

**Moffat Limited**

Rolleston
45 Illinois Drive
Izone Business Hub
Rolleston 7675
Telephone +64 3-983 6600
Facsimile +64 3-983 6660
sales@moffat.co.nz

Auckland
Telephone +64 9-574 3150
sales@moffat.co.nz


24:7 Service Support

ISO9001 Quality Management Standard

Designed and manufactured by

ISO9001
All Waldorf800 products are designed and manufactured by Moffat using the internationally recognised ISO9001 quality management system, covering design, manufacture and final inspection, ensuring consistent high quality at all times.

In line with policy to continually develop and improve its products, Moffat Limited reserves the right to change specifications and design without notice.


© Copyright Moffat Ltd
AN.W8.S.01.24


an Ali Group Company

The Spirit of Excellence