PRODUCT DOCUMENT PACK

Prepared and distributed by KW Commercial Kitchen

PRODUCT

Culinaire CH.BMH.I.GDD.6 Hot Food Bain Marie – 6 Bay, Island with 2-Tier Gantry – Heat L

Model / SKU: CH.BMH.I.GDD.6

KW COMMERCIAL KITCHEN

7/72 Canterbury Road, Bankstown NSW 2200

Phone 1300 001 366

Email sales@kwcommercial.com.au

Web www.kwcommercial.com.au

Scan for the current KW product page

DOCUMENT NOTICE

The supplier document begins on the next page. KW contact branding is added in a separate footer area and does not replace the supplier's instructions, specifications or warranty terms.

ch.bmh.i.gdd.6 a3 datasheet

SKU: CH.BMH.I.GDD.6

Distributed by KW Commercial - kwcommercial.com.au

Manufacturer documentation - (c) Culinaire

Retrieved: 2026-07-08

https://www.kwcommercial.com.au/product/culinaire-ch-bmh-i-gdd-6-hot-food-bain-marie-6-bay-island-with-2-t

Culinaire®

Bain Marie Hot Cupboard - 2 Tier Gantry - Island

CH.BMH.I.GDD.6

Product Information

- Unit comes complete with baine marie, hotcupboard, and 2-Tier 304 stainless steel gantry. (Gantry welded to bench top)
- Wet or dry operation (temperature varies greatly when run dry, should not be left unattended for long periods of time)
- Temperature regulation via digital control, designed to hold product between 65°C - 90°C.
- Independent controlls for baine marie, hot cupboard and gantry
- 2-Tier overhead gantry fitted with Quartz IR heat lamps on the underside of the both shelves
- Air insulated, double skinned tank for energy efficient heating
- Hot cupboard equioped with a fan forced heating system
- Top mounted easy glide doors that do not sit in a bottom track, eliminates dirt trap. 1/1GN shelf configuration (1 shelf per door)
- Robust 304 grade stainless steel construction
- Manual fill and manual empty, valve operated waste
- 1/1 GN sized well, fits pans up to 150mm deep (sold separately). Pan dividers not supplied
- Stainless steel work shelf mounted onto fold down brackets. This item is factory fitted and must be selected at time of order
- **12-month parts and labour warranty**

Specifications

Model	CH.BMH.I.GDD.6
W x D x H (mm)	2123 x 753 x 1650
Total Connected Load	9.1kW
Electrical Connection	3Ø+N+E 400VAC / 50Hz (Onsite connection)
Water Connection	G 1/2" BSP
Waste Connection	1 1/4" BSP

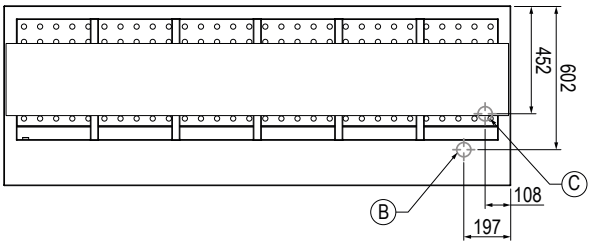

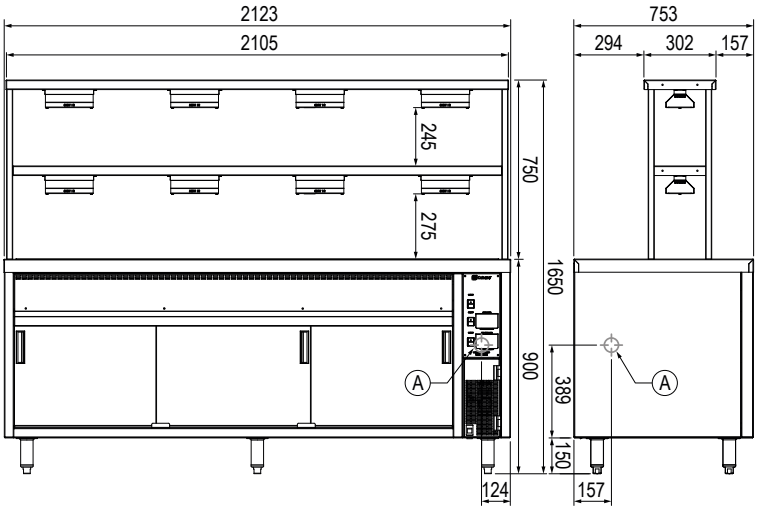

Optional Extras

Radius Well

Add **R** to code after the **I**	CH.BMH.I**R**.GDD.6

Left Hand Controls

Add **.L** after the **I** or **UR** in the product code to specify left hand controls	CH.BMH.I.**L**.GDD.6 CH.BMH.IR**.L**.GDD.6
Stainless Work Shelf	CA.WS.6

Note: Optional extras must be selected at time of order

Accessories

Large Pan Dividers (To suit large GN pans)	CA.PXL
Cross Pan Dividers (To suit smaller GN pans)	CA.PXS

Legend

A Electrical Connection

B Water Connection

C Waste Connection

1 YEAR PARTS & LABOUR WARRANTY

PROUDLY DESIGNED & MANUFACTURED IN AUSTRALIA

www.stoddart.com.au

www.stoddart.co.nz

Revision: A - 13/02/2025 - 03

Due to continuous product research and development, the information contained herein is subject to change without notice.

STODDART®