PRODUCT DOCUMENT PACK

Prepared and distributed by KW Commercial Kitchen

PRODUCT

Culinaire CR.CWCF.U.GSF.4 Under-Bench Refrigerated Cold Well with Flat Glass Gantry -

Model / SKU: CR.CWCF.U.GSF.4

KW COMMERCIAL KITCHEN

7/72 Canterbury Road, Bankstown NSW 2200

Phone 1300 001 366

Email sales@kwcommercial.com.au

Web www.kwcommercial.com.au

Scan for the current KW product page

DOCUMENT NOTICE

The supplier document begins on the next page. KW contact branding is added in a separate footer area and does not replace the supplier's instructions, specifications or warranty terms.

Culinaire

CR.CWCF.U.GSF.4

Counter Line - Refrigerated Well

Under Bench

Product Information:

- This display is designed to be mounted under a custom made bench top of your choice (manufactured and fitted by others)*
- Requires a gantry above the unit to work as per the intended design (meeting Australian standards)
- Supports will be required to hold the cold well in position under the bench top
- The blown air design passes cold air over and under the food pans creating an even cooling effect (product in the pans must not restrict the cold air flow stream blowing across the top of the pans)
- Adjustable digital temperature controller allows food to be held between +2°C to +4°C in a maximum of 32°C ambient temperature
- Fully insulated and constructed from 304 grade stainless steel with a No.4 finish
- Undermount refrigeration unit supplied with a condensate drain hose for connection to a tundish
- Suits gastronorm pans up to 100mm deep (sold separately).

Product Code:

CR	Culinaire Refrigerated
CWCF	Cold Well - Counter Line - Fan Forced
U	Under Bench
GSF	Flat Glass Gantry - Stainless Steel Fixings
4	4 Modules

Technical Data:

Dimensions: W x D x H:	1502 x 830 x 1095
Cutout Dimensions:	1395 x 545
Total Connected Load:	0.82kW
Electrical Connection:	10A plug & lead fitted

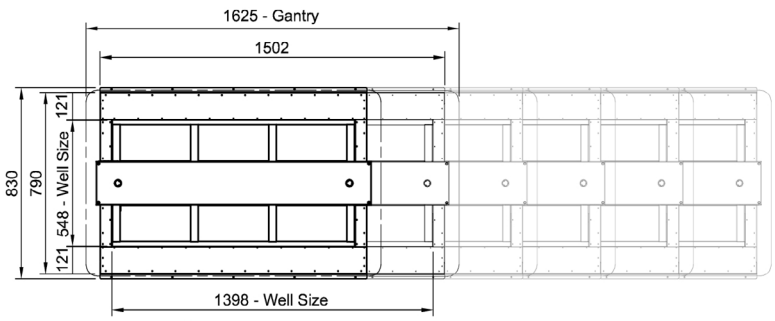

Plan View

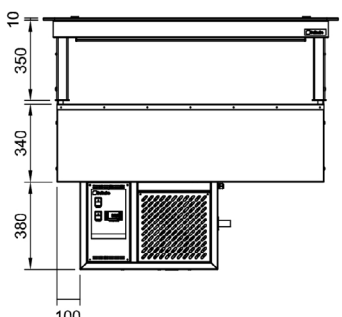

Front Elevation

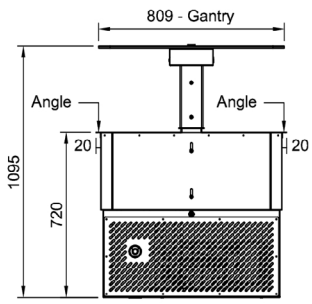

End Elevation

* Attention to adequate ventilation allowances will be required if the service compartment is to be located in a joinery unit. Stoddart to review intended ventilation.

All Culinaire products are supplied with a 12 month parts and labour warranty as standard.

Due to continuous product research and development, the information contained herein is subject to change without notice.

Revision: September 2, 2020 - A

www.stoddart.com.au
www.stoddart.co.nz

Proudly Manufactured in Australia

STODDART®