PRODUCT DOCUMENT PACK

Prepared and distributed by KW Commercial Kitchen

PRODUCT

Culinaire CR.IBGJ.CWCF.U.GSF.4 Mobile Refrigerated Island Buffet – Stone Top & Joinery

Model / SKU: CR.IBGJ.CWCF.U.GSF.4

KW COMMERCIAL KITCHEN

7/72 Canterbury Road, Bankstown NSW 2200

Phone 1300 001 366

Email sales@kwcommercial.com.au

Web www.kwcommercial.com.au

Scan for the current KW product page

DOCUMENT NOTICE

The supplier document begins on the next page. KW contact branding is added in a separate footer area and does not replace the supplier's instructions, specifications or warranty terms.

cr.ibgj.cwcf.u.gsf.4 b3.datasheet

SKU: CR.IBGJ.CWCF.U.GSF.4

Distributed by KW Commercial - kwcommercial.com.au

Manufacturer documentation - (c) Culinaire

Retrieved: 2026-07-08

https://www.kwcommercial.com.au/product/culinaire-cr-ibgj-cwcf-u-gsf-4-hot-food-bain-marie-4-bay-stone-top-

Culinaire®

Mobile Refrigerated Island Buffet

CR.IBGJ.CWCF.U.GSF.4

Product Information

- Mobile refrigerated island buffet 4 bay, with stone top and joinery panels
- Buffet unit is fitted with an under bench cold well, (CR.CWCF.U.GSB)
- Adjustable digital temperature controller allows food to be held between +2°C to +4°C in a maximum of 32°C ambient temperature
- The blown air design passes cold air over and under the food pans creating an even cooling effect (product in the pans must not restrict the cold air flow stream blowing across the top of the pans)
- Fitted with a stainless steel gantry support frame and light surround
- 10mm toughened flat glass gantry fitted with high impact, low energy L.E.D. lighting
- Culinaire buffet units can be customised to suit any application (minimum dimensions of buffet unit shown below)
- Additional items can be incorporated into the buffet unit such as plate dispensers, plate shelves under, induction warming units, etc..
- Internal framing is constructed from a heavy-duty stainless steel to endure the day to day use in a busy environment
- Heavy-duty non-marking 75mm swivel castors, two with brakes
- A ventilation grill is fitted to the base panels to ensure adequate ventilation to the refrigeration unit. Location will vary depending on the cold well size
- Removable condensate drip tray for water collection (no plumbing to waste required). Condensate container to be emptied between service periods
- Optional condensate burn off tray can be fitted to buffet unit at the time of manufacture.
- **Made to Order**
- **12-month parts and labour warranty**

Specifications

Model	CR.IBGJ.CWCF.U.GSF.4
W x D x H (mm)	1740 x 1000 x 1260
Total Connected Load	0.82kW
Electrical Connection	1Ø+N+E 240VAC / 50Hz (10A plug & lead)

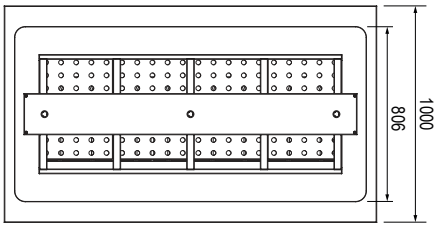

Optional Extras

Condensate Burn Off Tray	CR.T5.ET
4 Module with Black Glass Gantry	CR.IBSJ.CWCF.U.GSB.4

Note: Optional extras must be selected at time of order

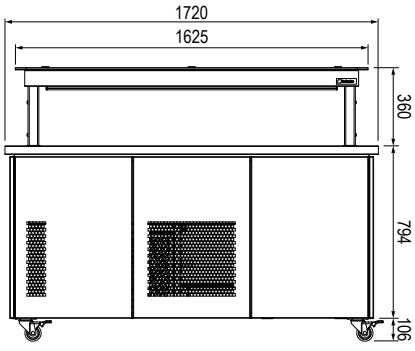

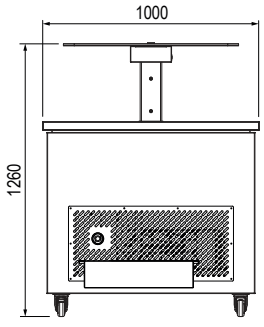

1 YEAR PARTS & LABOUR WARRANTY

PROUDLY DESIGNED & MANUFACTURED IN AUSTRALIA

www.stoddart.com.au
www.stoddart.co.nz

Revision: B - 23/27/2025 - 03

Due to continuous product research and development,
the information contained herein is subject to change without notice.

STODDART®