PRODUCT DOCUMENT PACK

Prepared and distributed by KW Commercial Kitchen

PRODUCT

Culinaire CR.IB.CLCBF.GCP.6 Slimline Mobile Refrigerated Island Buffet with Curved Glas

Model / SKU: CR.IB.CLCBF.GCP.6

KW COMMERCIAL KITCHEN

7/72 Canterbury Road, Bankstown NSW 2200

Phone 1300 001 366

Email sales@kwcommercial.com.au

Web www.kwcommercial.com.au

Scan for the current KW product page

DOCUMENT NOTICE

The supplier document begins on the next page. KW contact branding is added in a separate footer area and does not replace the supplier's instructions, specifications or warranty terms.

Official supplier source: /home/sarah/kw_system/07_Content_Library/product_db/supplier raw data/stoddart_extracted/8_Culinaire/Data Sheets

cr.ib.clcbf.gcp.6 h2 datasheet

SKU: CR.IB.CLCBF.GCP.6

Distributed by KW Commercial - kwcommercial.com.au

Manufacturer documentation - (c) Culinaire

Retrieved: 2026-07-08

https://www.kwcommercial.com.au/product/culinaire-cr-ib-clcbf-gcp-6-hot-food-bain-marie-6-bay-mobile

Culinaire®

Slimline Mobile Refrigerated Island Buffets

CR.IB.CLCBF.GCP.6

Product Information

- A practical and attractive solution to the presentation and holding of food for self-serve and in crib situations
- Designed for up to 3 hours continuous use
- Food to be removed and unit switched off between service periods
- Supplied with stainless steel covers for the cold well
- Adjustable digital temperature controller allows food to be held between +2°C to +4°C in a maximum of 32°C ambient temperature
- The blown air design passes cold air over and under the food pans creating an even cooling effect (product in the pans must not restrict the cold air flow stream blowing across the top of the pans)
- Fitted with a stainless-steel gantry support frame and light surround
- Angled perspex gantry fitted with fluorescent lights
- Fully insulated and constructed from 304 grade stainless steel with a No.4 finish
- Self-contained refrigeration with removable container for condensate water collection (no plumbing to waste required). Condensate container to be emptied between service periods
- Heavy-duty non-marking 75mm swivel castors
- Supplied as standard with 65mm deep gastronorm pans
- Suits gastronorm pans up to 100mm deep (sold separately)
- **12-month parts and labour warranty**

Specifications

Model	CR.IB.CLCBF.GCP.6
W x D x H (mm)	2164 x 770 x 1524
Total Connected Load	1.44kW
Electrical Connection	1Ø+N+E 240VAC / 50Hz (Onsite connection)

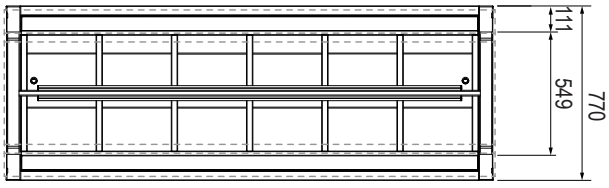

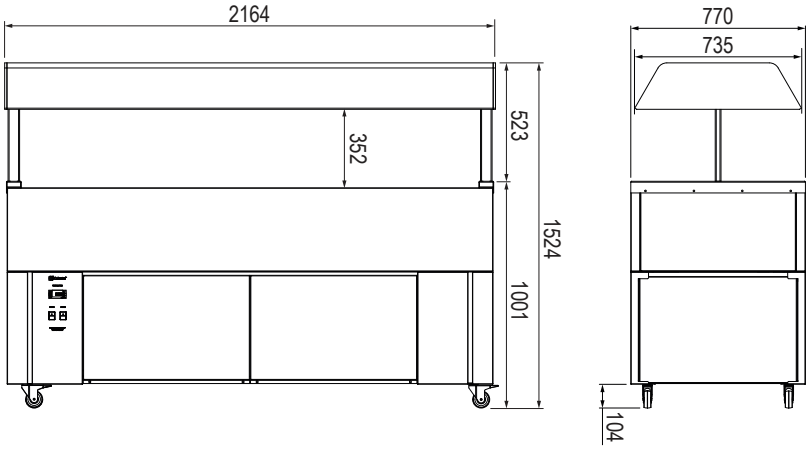

Optional Extras:

Tray Race

Add T**R** to code after the **CBF**	CR.IB.CLCBF.TR.6.SL

Note: Optional extras must be selected at time of order
2 sections per side, 4 sections required for a tray race each side

Accessories

Large Pan Dividers (To suit large GN pans)	CA.PXL
Cross Pan Dividers (To suit smaller GN pans)	CA.PXS

1 YEAR PARTS & LABOUR WARRANTY

PROUDLY DESIGNED & MANUFACTURED IN AUSTRALIA

www.stoddart.com.au
www.stoddart.co.nz

Revision: H - 06/01/2025- 02
Due to continuous product research and development,
the information contained herein is subject to change without notice.

STODDART®