PRODUCT DOCUMENT PACK

Prepared and distributed by KW Commercial Kitchen

PRODUCT

Giorik FLG72GFT Cooktop On Stand – 400mm - Smooth Mild Steel Plate

Model / SKU: FLG72GFT

KW COMMERCIAL KITCHEN

7/72 Canterbury Road, Bankstown NSW 2200

Phone 1300 001 366

Email sales@kwcommercial.com.au

Web www.kwcommercial.com.au

Scan for the current KW product page

DOCUMENT NOTICE

The supplier document begins on the next page. KW contact branding is added in a separate footer area and does not replace the supplier's instructions, specifications or warranty terms.

GIORIK
INNOVATIVE COOKING EQUIPMENT SINCE 1963

FLG72GFT

Frytop - Gas, Mild Steel, Smooth Plate / Open Base

700

Product Information:

- Class leading, European style, professional quality and reliability since 1963
- 700 series, gas frytop with 12mm smooth mild steel plate (25 MJ/h)
  (also available in 12mm ribbed mild steel plate)
- Piezo ignition burners with flame failure device and pilot burner
- Temperature regulation via variable power flame control
- Robust 304 grade stainless steel construction with rounded corners for improved cleaning
- Hermetically sealed, pressed work surface with raised edges to protect from overflow
- Removable 1/3 GN grease tray
- Open base with optional door available (SPGI.2016437)
- Height adjustable stainless steel feet for a 900mm working height
- 24-month warranty

General Drawing:

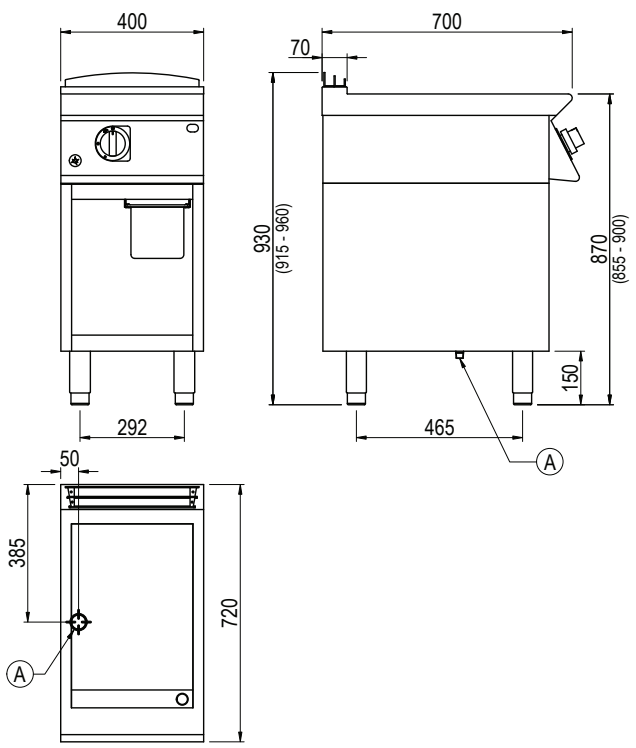

Specifications:

Model - Smooth	FLG72GFT
Model - Ribbed	FRG72GFT
W x D x H (mm)	400 x 720 x 930
Weight	60kg
Cooktop (mm)	340 x 460
Packed Dimensions (mm)	450 x 825 x 1200
Packed Weight (mm)	65kg

	Natural	Universal LPG
Gas Connection	1/2" BSP	1/2" BSP
Minimum Normal Test Gas Pressure	1.3 kPa	2.75 kPa
Maximum Normal Test Gas Pressure	3.5 kPa	3.5 kPa
Nominal Test Point Pressure	1.0 kPa	2.65 kPa
Total Nominal Gas Consumption	25 MJ/h	25 MJ/h

Note: It is the responsibility of the installing gas plumber to ensure correct supply and connection sustaining appropriate pressure, when all installed gas appliances are operating at maximum.

Legend:

A	Gas Connection

Due to continuous product research and development,
the information contained herein is subject to change without notice.

Revision: 01 - 05/01/2022 - A

www.stoddart.com.au
www.stoddart.co.nz

AUSTRALIA AND NEW ZEALAND GAS SAFETY CERTIFICATION

STODDART®