PRODUCT DOCUMENT PACK

Prepared and distributed by KW Commercial Kitchen

PRODUCT

Giorik CE94QGT Cooktop On Stand – 4 x Square Hot Plates

Model / SKU: CE94QGT

KW COMMERCIAL KITCHEN

7/72 Canterbury Road, Bankstown NSW 2200

Phone 1300 001 366

Email sales@kwcommercial.com.au

Web www.kwcommercial.com.au

Scan for the current KW product page

DOCUMENT NOTICE

The supplier document begins on the next page. KW contact branding is added in a separate footer area and does not replace the supplier's instructions, specifications or warranty terms.

GIORIK
INNOVATIVE COOKING EQUIPMENT SINCE 1963

CE94QGT

Boiling Top - Electric, 4 Square Plates / Open Base

900

Product Information:

- Class leading, European style, professional quality and reliability since 1963
- 900 series, electric boiling top with square hot plates (4 x 4.32kW)
- Temperature regulation via 6 position selector
- Indicator lights to monitor the correct operation of the appliance
- Robust 304 grade stainless steel construction with rounded corners for improved cleaning
- Hermetically sealed, pressed work surface with raised edges to protect from overflow
- Open base with optional doors available (SPGI.2016437)
- Height adjustable stainless steel feet for a 900mm working height
- 24-month warranty

General Drawing:

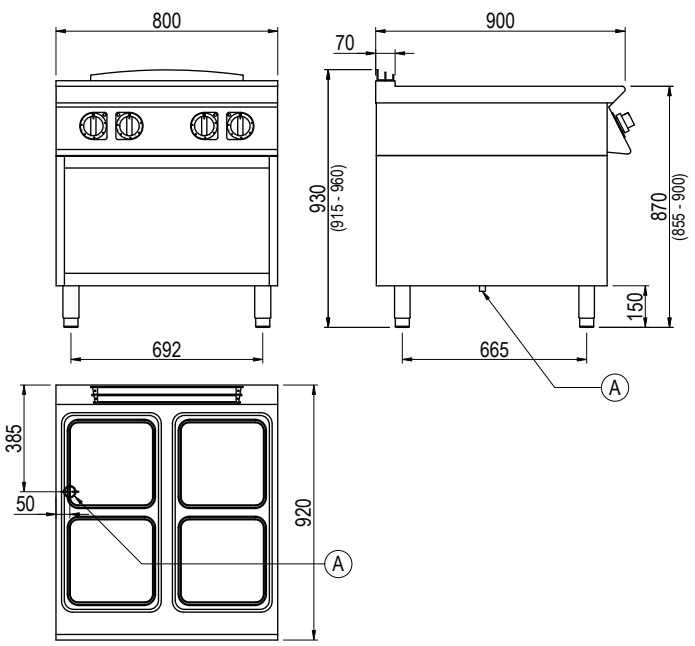

Specifications:

Model	CE94QGT
W x D x H (mm)	800 x 920 x 930
Weight	110kg
Hot Plates	4 x (300x300mm)
Packed Dimensions (mm)	845 x 1025 x 1200
Packed Weight (mm)	122kg
Electrical Connection	3Ø + N + E 415VAC / 50Hz / 17.28kW

Legend:

A	Electrical Connection

Due to continuous product research and development,
the information contained herein is subject to change without notice.

Revision: 01 - 10/01/2022 - A

www.stoddart.com.au
www.stoddart.co.nz

STODDART®