PRODUCT DOCUMENT PACK

Prepared and distributed by KW Commercial Kitchen

PRODUCT

Giorik TE920GT Cooktop On Stand – 400mm Wide - Electric

Model / SKU: TE920GT

KW COMMERCIAL KITCHEN

7/72 Canterbury Road, Bankstown NSW 2200

Phone 1300 001 366

Email sales@kwcommercial.com.au

Web www.kwcommercial.com.au

Scan for the current KW product page

DOCUMENT NOTICE

The supplier document begins on the next page. KW contact branding is added in a separate footer area and does not replace the supplier's instructions, specifications or warranty terms.

GIORIK
INNOVATIVE COOKING EQUIPMENT SINCE 1963

TE920GT

Solid Target Top - Electric / Open Base

900

Product Information:

- Class leading, European style, professional quality and reliability since 1963
- 900 series, ultra-thick, reinforced radiant plate with 2 independent cooking zones (3.1kW)
- Heating elements with Hi-limit temperature protection
- Temperature regulation via thermostat (50°C – 400°C)
- Robust 304 grade stainless steel construction with rounded corners for improved cleaning
- Removable grease tray
- Open base with optional doors available (SPGI.2016437)
- Height adjustable stainless steel feet for a 900mm working height
- 24-month warranty

General Drawing:

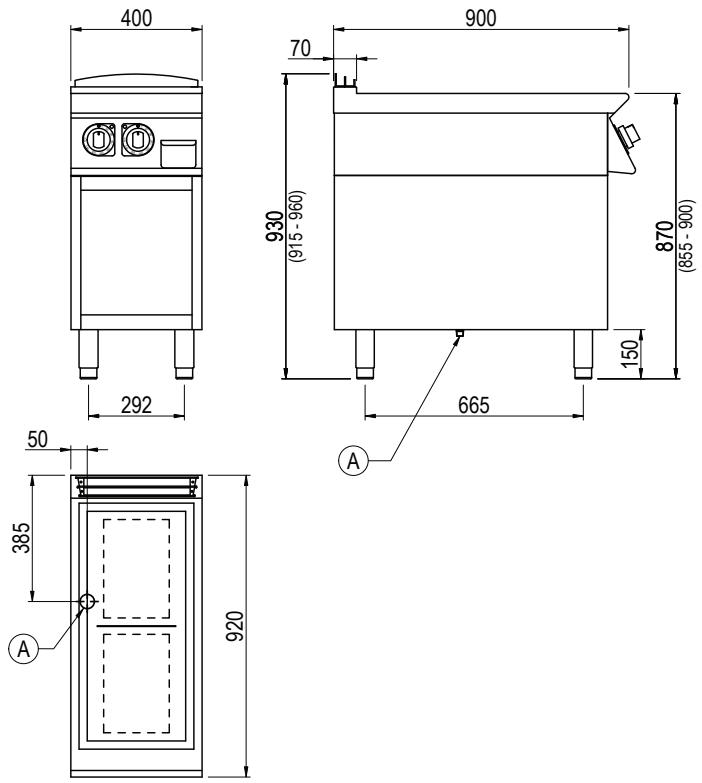

Specifications:

Model	TE920GT
W x D x H (mm)	400 x 920 x 930
Weight	90kg
Plate Dimensions (mm)	300 x 700
Packed Dimensions (mm)	450 x 1025 x 1200
Packed Weight (mm)	97kg
Electrical Connection	3Ø + N + E 415VAC / 50Hz /6.2kW

Legend:

A	Electrical Connection

Due to continuous product research and development,
the information contained herein is subject to change without notice.

Revision: 01 - 20/01/2022 - A

www.stoddart.com.au
www.stoddart.co.nz

STODDART®