PRODUCT DOCUMENT PACK

Prepared and distributed by KW Commercial Kitchen

PRODUCT

Giorik CW920GT Cooktop On Stand – Ø300mm Cooking Zone

Model / SKU: CW920GT

KW COMMERCIAL KITCHEN

7/72 Canterbury Road, Bankstown NSW 2200

Phone 1300 001 366

Email sales@kwcommercial.com.au

Web www.kwcommercial.com.au

Scan for the current KW product page

DOCUMENT NOTICE

The supplier document begins on the next page. KW contact branding is added in a separate footer area and does not replace the supplier's instructions, specifications or warranty terms.

GIORIK
INNOVATIVE COOKING EQUIPMENT SINCE 1963

CW920GT

Induction Wok - Open Base

900

Product Information:

- Class leading, European style, professional quality and reliability since 1963
- 700 series, ceramic glass induction wok with single independent cooking zone (5.4kW)
- Constant power induction and heat generation activated by the automatic wok recognition when induction specific wok is placed on the cooktop
- Automatic shut off when wok is removed from the cooktop
- Precise heat transfer for shorter cook times and enhanced operator safety and comfort
- Independent temperature regulation via 6 position selectors
- Indicator light to monitor the correct operation of the appliance
- Robust 304 grade stainless steel construction with rounded corners for improved cleaning
- Open base with optional door available (SPGI.2016437)
- Compatible Wok (SPGI.5920010) and Wok ring set (SPGI2021656) sold separately
- Height adjustable stainless steel feet for a 900mm working height
- 24-month warranty

General Drawing:

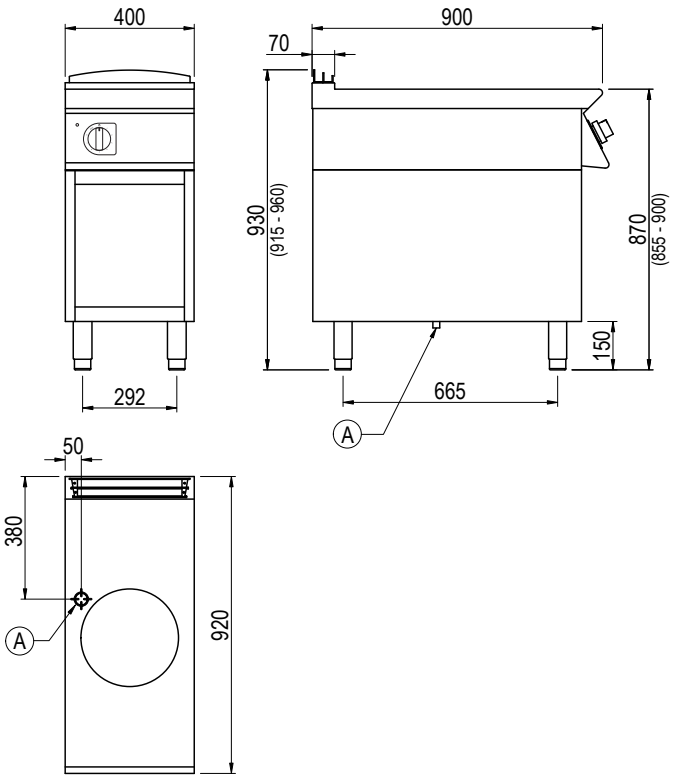

Specifications:

Model	CW920GT
W x D x H (mm)	400 x 920 x 930
Weight	72kg
Cooking Zone	Ø300mm
Packed Dimensions (mm)	450 x 1025 x 1200
Packed Weight (mm)	79kg
Electrical Connection	3Ø + N + E 415VAC / 50Hz / 5.4kW

Legend:

A	Electrical Connection

Due to continuous product research and development,
the information contained herein is subject to change without notice.

Revision: 02 - 24/09/2025 - A

www.stoddart.com.au
www.stoddart.co.nz

STODDART®