PRODUCT DOCUMENT PACK

Prepared and distributed by KW Commercial Kitchen

PRODUCT

Bromic 3335637 DD1875CG-NR Curved Glass Deli Display – 527L, 1955mm Wide

Model / SKU: 3335637

KW COMMERCIAL KITCHEN

7/72 Canterbury Road, Bankstown NSW 2200

Phone 1300 001 366

Email sales@kwcommercial.com.au

Web www.kwcommercial.com.au

Scan for the current KW product page

DOCUMENT NOTICE

The supplier document begins on the next page. KW contact branding is added in a separate footer area and does not replace the supplier's instructions, specifications or warranty terms.

Official supplier source: /media/products/23574/documents/spec_sheet-1.pdf

DD1875CG-NR

BROMIC REFRIGERATION

Curved Glass Deli Display 1955mm

Deli Displays

Accurate temperature control with a digital controller

Convenient food preparation with a rear bench

Safe for perishable food storage with 3M1 climate class

Sliding plexi-glass to easily re-stock deli from the rear

Bright LED lighting in natural light to enhance the presentation of displayed food

Easy access to food items with hydraulic lift-up front glass

Easily remove display trays for cleaning

Save on energy costs and reduce environmental impact with natural refrigerant

Choose between standalone use or multiplexing to expand the display area

Additional refrigerated storage space at the back to maximise storage

Removable front panel to quickly access and clean the unit for optimal performance

Fully compliant with Australian safety standards and regulations

Move the fridge around with ease thanks to castors

5 Years Bromic Extra Care Warranty - Labour and Parts

DD1875CG-NR

BROMIC REFRIGERATION

Curved Glass Deli Display 1955mm

Deli Displays

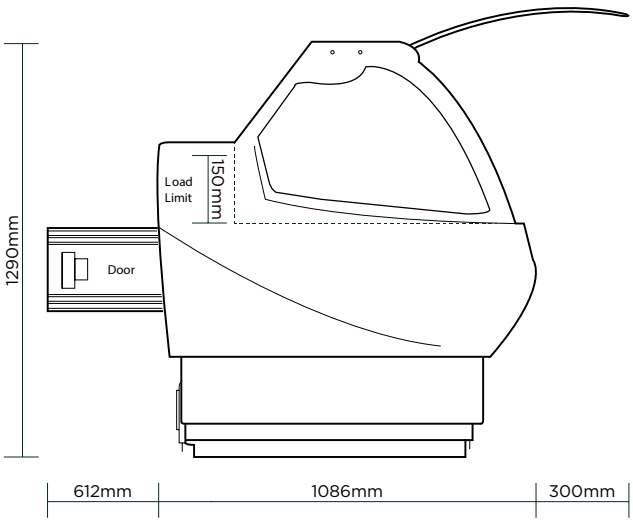

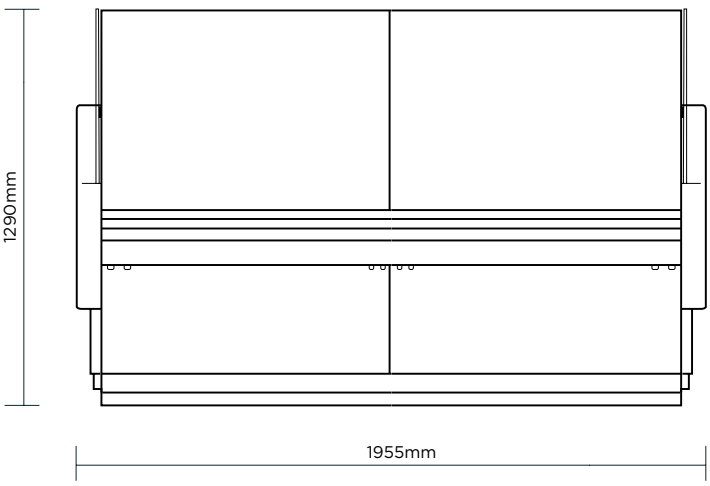

SPECIFICATIONS

Part Number	3335637
Volume	527L
Unit Weight	306kg
Packaged Weight	322kg
Adjustable Temp. Range	-1 to 10°C
Max. Ambient Temp. Range	25°C
Climate Class	3M1
Energy Consumption	8.5kWh/24h
Refrigeration Capacity	497W
Refrigerant	R290
Air-Circulation	Fan Forced
Rated Current	2.16A
Electrical Voltage	220-240V
Frequency	50Hz
Power Supply	Single Phase
Power Plug	1 x 10A
Plug Location	Rear, bottom left

Cord Length	2m
Internal Light	LED
Colour Temp.	4000K
Door Lock	No
No. of Doors	2
Door Type	Solid
Door Style	Hinged
Door Swing Dimension	612mm
Total Depth of Door Open	1698mm
Defrost System	Automatic
Temp. Controller	Digital
Rear Storage	Yes
Castors	Yes
Hydraulic Lift-up System	Yes
Front Lifting Glass	Yes
Colour	Grey
Warranty	5 Years Bromic Extra Care Warranty - Labour and Parts

DIMENSIONS

	External (mm)
Width	1955
Depth	1086
Height	1290

	Packaged (mm)
Width	2000
Depth	1180
Height	1740