PRODUCT DOCUMENT PACK

Prepared and distributed by KW Commercial Kitchen

PRODUCT

Bromic 3335632 DD1875SG-NR Square Glass Deli Display – 527L, 1955mm Wide

Model / SKU: 3335632

KW COMMERCIAL KITCHEN

7/72 Canterbury Road, Bankstown NSW 2200

Phone 1300 001 366

Email sales@kwcommercial.com.au

Web www.kwcommercial.com.au

Scan for the current KW product page

DOCUMENT NOTICE

The supplier document begins on the next page. KW contact branding is added in a separate footer area and does not replace the supplier's instructions, specifications or warranty terms.

Official supplier source: /media/products/44581/documents/spec_sheet-3.pdf

DD1875SG-NR

BROMIC REFRIGERATION

Square Glass Deli Display 1955mm

Deli Displays

KW COMMERCIAL KITCHEN
Distributed by KW Commercial Kitchen | 1300 001 366
www.kwcommercial.com.au | sales@kwcommercial.com.au

DD1875SG-NR

BROMIC REFRIGERATION

Square Glass Deli Display 1955mm

Deli Displays

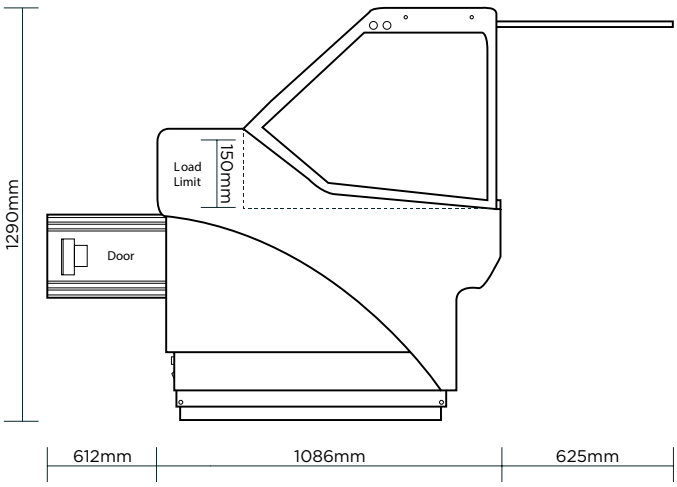

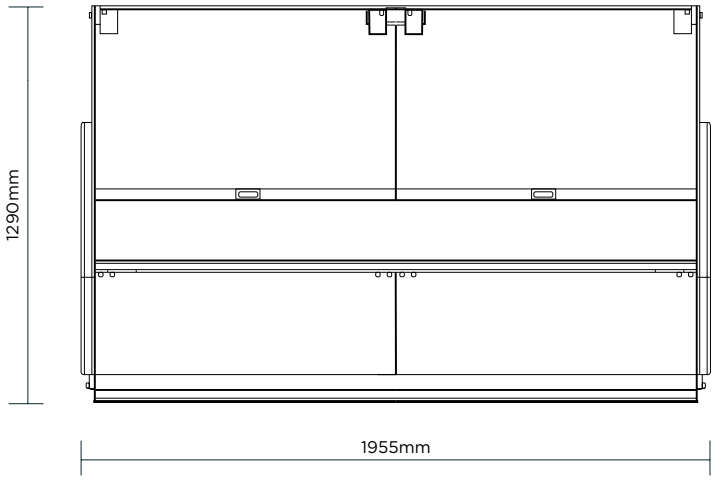

SPECIFICATIONS

Part Number	3335632
Volume	527L
Unit Weight	306kg
Packaged Weight	322kg
Adjustable Temp. Range	-1 to 10°C
Max. Ambient Temp. Range	25°C
Climate Class	3M1
Energy Consumption	8.5kWh/24h
Refrigeration Capacity	497W
Refrigerant	R290
Air-Circulation	Fan Forced
Rated Current	2.16A
Electrical Voltage	220-240V
Frequency	50Hz
Power Supply	Single Phase
Power Plug	1 x 10A
Plug Location	Rear, bottom left

Cord Length	2m
Internal Light	LED
Colour Temp.	4000K
Door Lock	No
No. of Doors	2
Door Type	Solid
Door Style	Hinged
Door Swing Dimension	625mm
Total Depth of Door Open	1721mm
Defrost System	Automatic
Temp. Controller	Digital
Rear Storage	Yes
Castors	Yes
Hydraulic Lift-up System	Yes
Front Lifting Glass	Yes
Colour	Grey
Warranty	5 Years Bromic Extra Care Warranty - Labour and Parts

DIMENSIONS

	External (mm)
Width	1955
Depth	1086
Height	1290

	Packaged (mm)
Width	2000
Depth	1180
Height	1740

KW COMMERCIAL KITCHEN
Distributed by KW Commercial Kitchen | 1300 001 366
www.kwcommercial.com.au | sales@kwcommercial.com.au