PRODUCT DOCUMENT PACK

Prepared and distributed by KW Commercial Kitchen

PRODUCT

Bromic 3335633 DD2500SG-NR Square Glass Deli Display – 703L, 2580mm

Model / SKU: 3335633

KW COMMERCIAL KITCHEN

7/72 Canterbury Road, Bankstown NSW 2200

Phone 1300 001 366

Email sales@kwcommercial.com.au

Web www.kwcommercial.com.au

Scan for the current KW product page

DOCUMENT NOTICE

The supplier document begins on the next page. KW contact branding is added in a separate footer area and does not replace the supplier's instructions, specifications or warranty terms.

Official supplier source: /media/products/44582/documents/manual-2.pdf

BROMIC REFRIGERATION | Confidence and control.

INSTRUCTION MANUAL
DELI DISPLAYS

DD1250SG-NR, DD1250CG-NR, DD1875SG-NR,
DD1875CG-NR, DD2500SG-NR, DD2500CG-NR.

REVISION 2 | 13/06/2023

CONTENTS

1. PREFIX 4

2. IMPORTANT NOTES & WARNINGS 5

3. PACKAGING AND HANDLING 6

4. PRODUCT OVERVIEW 6

5. INSTALLATION 8

6. OPERATION 10

7. PRODUCT LOADING AND STORAGE 11

8. TROUBLESHOOTING 13

9. MULTIPLEXING PROCEDURE 14

10. ACCESSORIES LIST 16

11. ENVIRONMENTAL AND DISPOSAL NOTES 17

10. WARRANTY 18

Note: Bromic Refrigeration reserves the right to make changes to specifications, parts, components and equipment without prior notification.
This Installation, operation and service manual may not be reproduced in any form with prior written consent from Bromic Refrigeration.

1. PREFIX

This manual contains important information about the installation, operation, and maintenance of Bromic Deli Display units. Please pay close attention to the important safety information shown throughout this instruction manual. Any safety information will be accompanied by the following safety alert symbols:

⚠ DANGER, ⚠ WARNING, ⚠ IMPORTANT

- READ THIS MANUAL CAREFULLY before installing or servicing this product.
- Improper installation, operation, or maintenance can result in death, severe injury, or property damage.
- Improper installation, operation, or maintenance may also result in warranty being voided.
- This appliance is intended for 230-240 Volt power supply.
- Installation MUST be carried out by a licensed and authorised technician in accordance with local electrical codes.
- Installation and maintenance MUST be carried out as per instruction, by a qualified technician in accordance with local regulation

2. IMPORTANT NOTES AND WARNINGS

- Read all instructions before installing or using this appliance
- Retain this manual for future reference
- Use this appliance only as described in this manual. Any other use not recommended by the manufacturer may cause fire, electric shock or injury.
- Improper installation, adjustment or alteration and failure to follow the warnings and instructions in this manual could result in severe personal injury, death or property damage
- The manufacturer is not responsible for any damage that could happen from improper use. The manufacturer emphasises that this appliance should be used in a responsible manner and that all procedures, warnings, and safety instructions contained in this booklet be followed strictly.
- Check the appliance for damage. Do not operate a damaged unit.
- Check for damage to the appliance regularly. If damage to the appliance is suspected, discontinue use immediately and contact the supplier or qualified person to repair.
- This appliance is not intended for use by people (including children) with reduced physical, sensory or mental capabilities, or lack of experience and knowledge, unless they have been given supervision or instruction concerning use of the appliance by a person responsible of their safety.
- Keep packaging material out reach of children
- Children should be carefully supervised to ensure that they do not play with the appliance
- Do not attempt to alter the appliance in any manner.
- Please pay attention to the maximum load limit when filling the shelves.
- All work on electrical equipment must be carried out by a qualified and licensed technician only.
- Do not perform maintenance until the appliance has been turned off and power disconnected.
- Never detach any cover except where specifically instructed in this manual. Doing so might expose live electrical parts.
- Do not operate the appliance with panels, covers or guards removed.
- Keep the air intake and outlets free of obstructions.
- Do not use the appliance outdoors.
- If the supply cord becomes damaged, it must be replaced by an authorised service agent or similarly qualified person in order to avoid a hazard.
- If the appliance has not been used, or will not be used for a long period of time, disconnect power supply.
- The appliance must be installed in accordance to AS1677.2:1998 to ensure there are no sources of ignition any area where refrigerant could gather in the event of a leak.
- Electrical equipment should not be placed under the unit or where refrigerant could gather in the event of a leak.
- Installation/servicing of the appliance must be performed by a licensed technician with Gas Work Authorization if the appliance gas system is being opened or charged.
- The refrigerant used in all appliances covered by this manual are flammable.

Caution
Risk of fire

3. PACKAGING AND HANDLING

- This Deli display contains fragile glass. The unit must always be handled with care.
- Adjust the width of forklift tines such that they line up with the structural supports on the Deli unit before lifting.
- The Deli unit must always be handled on flat and level ground.
- Take care not to damage the castors, while inserting forklift tines into the pallet.

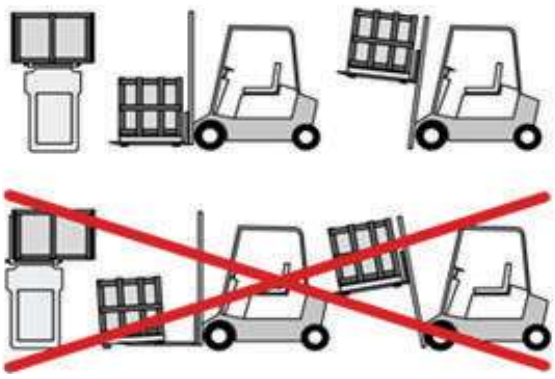

4. PRODUCT OVERVIEW

		DD1250SG-NR	DD1250CG-NR	DD1875SG-NR	DD1875CG-NR	DD2500SG-NR	DD2500CG-NR
Part Number		3335631	3335636	3335632	3335637	3335633	3335638
External Dimension	Height, mm	1290	1297	1290	1297	1290	1297
	Width, mm	1330	1330	1955	1955	2580	2580
	Depth, mm	1075	1086	1075	1086	1075	1086
Packaged Dimension	Height, mm	1335	1335	1335	1335	1335	1335
	Width, mm	1350	1350	2000	2000	2650	2650
	Depth, mm	1180	1180	1180	1180	1180	1180
Capacity	Litres	225	225	338	338	450	450
Weight	Kg	230	230	336	336	450	450
Net Volume	Litres	351	351	527	527	703	703
Air Circulation	Type	Fan Forced	Fan Forced	Fan Forced	Fan Forced	Fan Forced	Fan Forced
Climate Class	Rating	3M1	3M1	3M1	3M1	3M1	3M1
Temperature	Range	1°C to 5°C	1°C to 5°C	1°C to 5°C	1°C to 5°C	1°C to 5°C	1°C to 5°C
	Type	Digital	Digital	Digital	Digital	Digital	
Exterior	Material	Stainless Steel	Stainless Steel	Stainless Steel	Stainless Steel	Stainless Steel	Stainless Steel
Interior	Material	Stainless Steel	Stainless Steel	Stainless Steel	Stainless Steel	Stainless Steel	Stainless Steel

BROMIC REFRIGERATION bromicrefrigeration.com.au 1300 276 642

KW COMMERCIAL KITCHEN
Distributed by KW Commercial Kitchen | 1300 001 366
www.kwcommercial.com.au | sales@kwcommercial.com.au

		DD1250SG-NR	DD1250CG-NR	DD1875SG-NR	DD1875CG-NR	DD2500SG-NR	DD2500CG-NR
Electrical	Voltage, V	230	230	230	230	230	230
	Frequency, Hz	50	50	50	50	50	50
	Current, A	1.72	1.72	2.19	2.19	3.22	3.22
	Power, W	396	396	504	504	741	741
	Fuse, A	16	16	16	16	16	16
Power Consumption	kWh/24h	6.1	6.1	8.5	8.5	11.6	11.6
Internal Light	Type	T8 LED Tube	T8 LED Tube	T8 LED Tube	T8 LED Tube	T8 LED Tube	T8 LED Tube
Colour	Default	4000K	4000K	4000K	4000K	4000K	4000K
Door	Solid/Glass	Glass	Glass	Glass	Glass	Glass	Glass
	Type Rear Display	Sliding	Sliding	Sliding	Sliding	Sliding	Sliding
	Type Rear Storage	Hinged	Hinged	Hinged	Hinged	Hinged	Hinged
Number of Doors	Front Display	1	1	2	2	2	2
	Rear Display	2	2	3	3	4	4
	Rear Storage	1	1	2	2	3	3
Door Swing	Height mm	1770	1770	1770	1770	1770	1770
Dimensions	Width mm	1330	1330	1955	1955	2580	2580
Front Display	Depth mm	1386	1386	1386	1386	1386	1386
Door Swing	Height mm	1290	1290	1290	1290	1290	1290
Dimensions*	Width mm	1330	1330	1955	1955	2580	2580
Rear Storage	Depth mm	1698	1698	1698	1698	1698	1698
Refrigeration	Refrigerant	R290	R290	R290	R290	R290	R290
	Charge, g	140	140	150	150	150	150
Plug	Rating	10A	10A	10A	10A	10A	10A
	Location	Rear	Rear	Rear	Rear	Rear	Rear
	Cord Length, m	2	2	2	2	2	2
Wheels	Type	Castors	Castors	Castors	Castors	Castors	Castors
	Quantity	4	4	4	4	6	6

*Door swing dimensions are given as the size of the entire cabinet when the specified doors are opened such that the cabinet produces the largest possible footprint.

1300 276 642 bromicrefrigeration.com.au BROMIC REFRIGERATION

KW COMMERCIAL KITCHEN
Distributed by KW Commercial Kitchen | 1300 001 366
www.kwcommercial.com.au | sales@kwcommercial.com.au

5. INSTALLATION

Locating the Cabinet

Ensure the following instructions are observed as this is vital for proper and trouble-free operation.

- Do not install the cabinet outdoors.
- Locate the appliance in a dry and well ventilated place.
- The unit must be positioned on a level surface.
- Do not install in the vicinity of heating radiators or other heat sources.
- Do not install the appliance where it is exposed to direct sunlight.
- Do not install the appliance where it is exposed to warm draughts or open doors.
- Keep the air intake and outlets free of obstructions.
- Adequate allowance should be made for door openings.

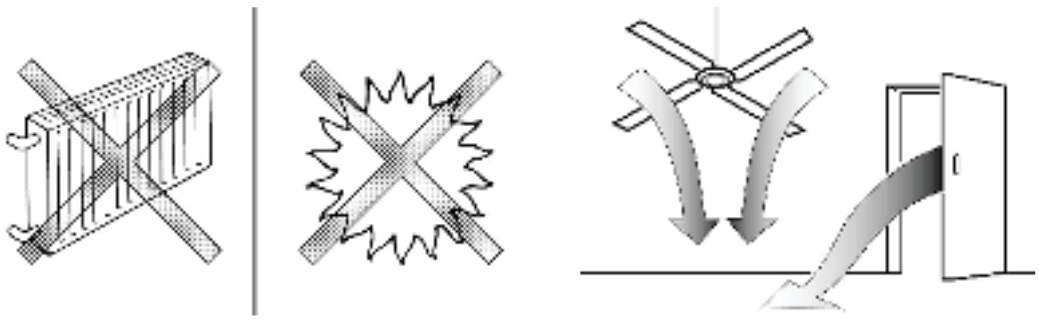

Ventilation

- Allow 150mm clearance between walls and the appliance.
- Ensure that the condenser fan is free to take in ambient air from the room.
- Adherence to minimum clearances is necessary

NOTE: The maximum ambient temperature for the refrigerator is 30°C. Conditions outside this temperature will result in cabinet temperatures outside the required 2 to 8°C range. Bromic recommends that the refrigerator is installed at an ambient temperature of 20 to 25°C.

Power Supply

- The appliance must not be plugged into a multiple outlet power board.
- The appliance is supplied with a flexible power cord fitted with a 3-pin plug.
- The socket used must be properly earthed and fuse/RCD protected.
- See the rating label inside the cabinet for supply voltage, frequency and current draw.
- Power cable is rated 70°C. It is recommended that the cable should not come into contact with parts over 50°C.
- Do not turn off power before consulting the person responsible.
- Mark the power source clearly, so the refrigerator is not unplugged or turned off accidentally.

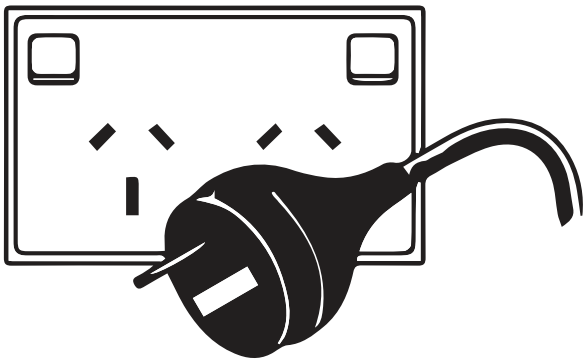

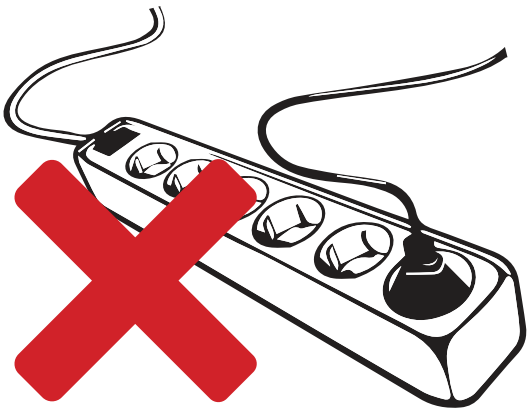

Before Operating

- If the appliance has been sharply tilted or transported in the horizontal position, it must be left to stand in the upright position and not plugged in for at least 4 hours.
- Remove all the packaging material before using the appliance.
- Start the appliance only if it has been installed as described.

1300 276 642 bromicrefrigeration.com.au BROMIC REFRIGERATION

Distributed by KW Commercial Kitchen | 1300 001 366
www.kwcommercial.com.au | sales@kwcommercial.com.au

6. OPERATION

Start-up

- Connect the appliance to the mains power supply.
- The switches (image below) control cabinet cooling, defrost, and lights respectively. Flip all switches on for cabinet operation.
- The compressor and condenser fan should operate should operate within 3 minutes after the Refrigeration switch is turned on.
- The electronic controller will display the current cabinet temperature after the Refrigeration switch is turned on.
- The ❄ LED indicates that refrigeration circuit is operating.
- During the start-up delay (3 minutes), the ❄ LED is flashing
- The LED indicates that the refrigeration circuit is defrosting

Setting the temperature

i. Press the SET button for more than 3 seconds.

ii. The value of the set point will be displayed and the '°C' or '°F' LED starts blinking.

iii. Press ▲ or ▼ arrow key within 10 seconds to adjust the set point.

iv. Press the SET key again or wait 10 seconds.

BROMIC REFRIGERATION bromicrefrigeration.com.au 1300 276 642

KW COMMERCIAL KITCHEN
Distributed by KW Commercial Kitchen | 1300 001 366
www.kwcommercial.com.au | sales@kwcommercial.com.au

7. PRODUCT LOADING AND STORAGE

IMPORTANT: Run the refrigerator for at least 2 hours before loading.

WARNING: : Do not store explosive substances such as aerosol cans with a flammable propellant inside the appliance.

Start-up

- Clean the interior surface with a soft cloth and warm water before loading.
- Ensure there is free circulation of air between the products.
- Do not block the evaporator fan.
- Do not overstock the refrigerator.
- Keep refrigerator door openings to a minimum.
- Some products are sensitive to ultraviolet (UV) light, please see storage guidelines from the manufacturer before removing from packaging.
- Do not block the rear or front grill when loading the Deli. This can reduce cooling performance.
- Do not overload the cabinet. Loading limit height is 150mm from the base of the cabinet. Bromic cannot guarantee that goods loaded above the 150mm limit will remain within the food-safe temperature range.

NOTE: Bromic cannot be responsible for loss of stock or damage to stock.

8. MAINTENANCE

WARNING: Disconnect the appliance from the power supply before performing any maintenance. Never unplug the appliance by pulling on the cord. Always grasp the plug firmly and pull straight out of the outlet.

WARNING: Exposure to significant water ingress will void warranty and cause potential safety issues. If the unit should be exposed to water, please contact the manufacturer immediately.

IMPORTANT: Warranty may be void if there is no evidence of preventative maintenance is performed on the appliance.

Cleaning the Cabinet

- Remove the products and transfer to a suitable location prior to cleaning the inside of the cabinet.
- Do not use any aggressive or abrasive cleaning agents.
- Never use a water hose or a high-pressure jet to clean.
- Do not use sharp or pointed objects for cleaning.
- Clean the inside and outside of the appliance with a clean damp cloth or with a neutral cleanser.
- Dry all surfaces with a dry cloth.

Condenser Coil/Filter

IMPORTANT: The filter and the condenser coil must be cleaned once a month. The filter can be removed for cleaning with water, make sure it is dried before reattaching. The condenser coil must be cleaned with vacuum/brush monthly to maintain the performance and minimise power consumption. A poorly maintained condenser coil can lead to failure of the unit and higher cabinet temperatures.

General cleaning

- The Deli display must be wiped down regularly.
- Preventing the build-up of oil and sediments will increase the longevity of the unit.

Condenser cleaning

- The Deli's front panel must be removed to properly clean the condenser (see image below).
- A clogged condensor can result reduced cooling performance.
- The condenser must be cleaned every 6 weeks.
- Recommended cleaning methods include:
  - Vacuum cleaner
  - Cleaning brush
  - Compressed air

Drain hose cleaning

- The drainage hose must be kept clean and clear.
- The drainage hose can be cleaned via the quick-access panel (see image below)
- A blocked condensate hose can result in reduced cooling performance.

8. TROUBLESHOOTING

IMPORTANT: Repairs on the unit must be carried out by an authorised and licensed person only. Contact the manufacturer or an approved service agent for any repairs needed.

Symptom	Possible Cause(s)	Solution
Deli does not turn on	A. No power supply	A. i. Check that switch is on ii. Try plugging cabinet into different power sockets iii. Check power plug and cord for damage
Deli temperature too high	A. Incorrect controller set point B. Ambient temperature too high C. Inadequate ventilation D. Dirty condenser unit E. Ice build-up on evaporator coil	A. Change controller set point B. Ensure unit is in an air-conditioned environment of 25C C. Keep ventilation slots clear D. Clean the condenser coil and drain pipe E. Ensure drain pipe is not clogged with oil or waste
Cabinet Temperature Too Low	A. Incorrect controller set point B. Ambient temperature too low C. Faulty evaporator probe	A. Change controller set point B. Ensure unit is in a temperature-controlled environment of 25C C. Contact Bromic service
Deli temperature greatly fluctuating	A. Cabinet is in direct sunlight or outdoors	A. Reposition cabinet such that it is not in direct sunlight or outdoors
Deli leaving water puddles on the ground	A. Cabinet glass is condensing and dripping B. Cabinet drip tray is overflowing	A. Ensure the cabinet is in an air-conditioned environment of 25C and 60% RH B. Contact Bromic service for diagnosis
Odour inside deli	A. Rotting odour inside cabinet B. Oil or smokey odour	A. Clean the cabinet B. Turn off the cabinet and contact Bromic service immediately

9. MULTIPLEXING PROCEDURE

The multiplexing procedure can be used to connect multiple Bromic Deli units together.

- A Bromic multiplexing kit must be used for this procedure.
- The multiplexing procedure must be performed a licensed technician.

	No	Drawings	Parts	QTY
SIDE COVER KIT	5		PULLING CASTING	2
	6		SCREW YSB 4 x 40	8
	7		SCREW YBS 4X22	2
	8	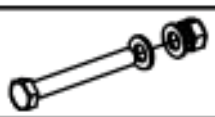	BOLT M5 x 30 WASHER M5 NUT M5	4
	9		TRAPEZ SCREW 5 x 60	4

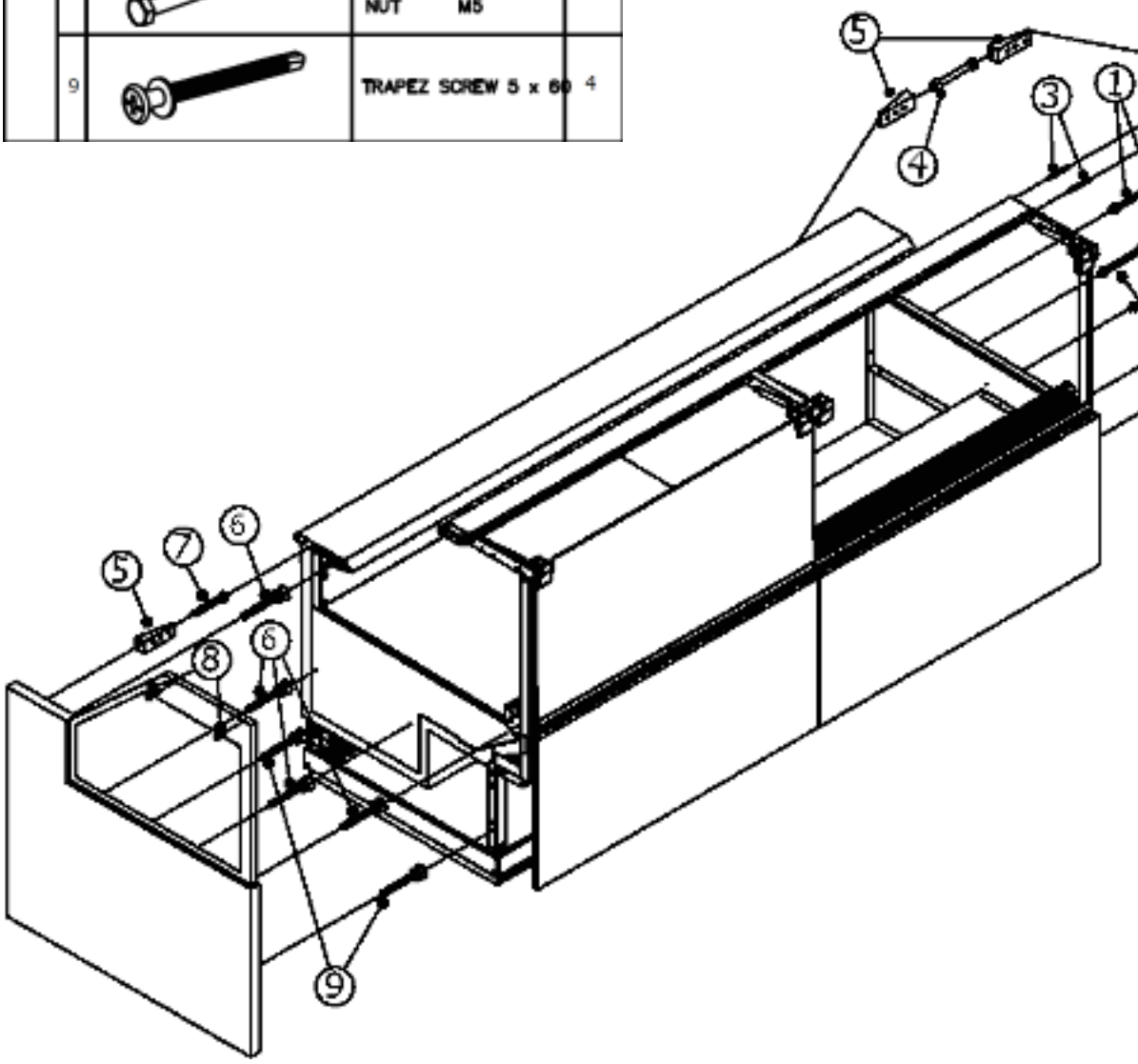

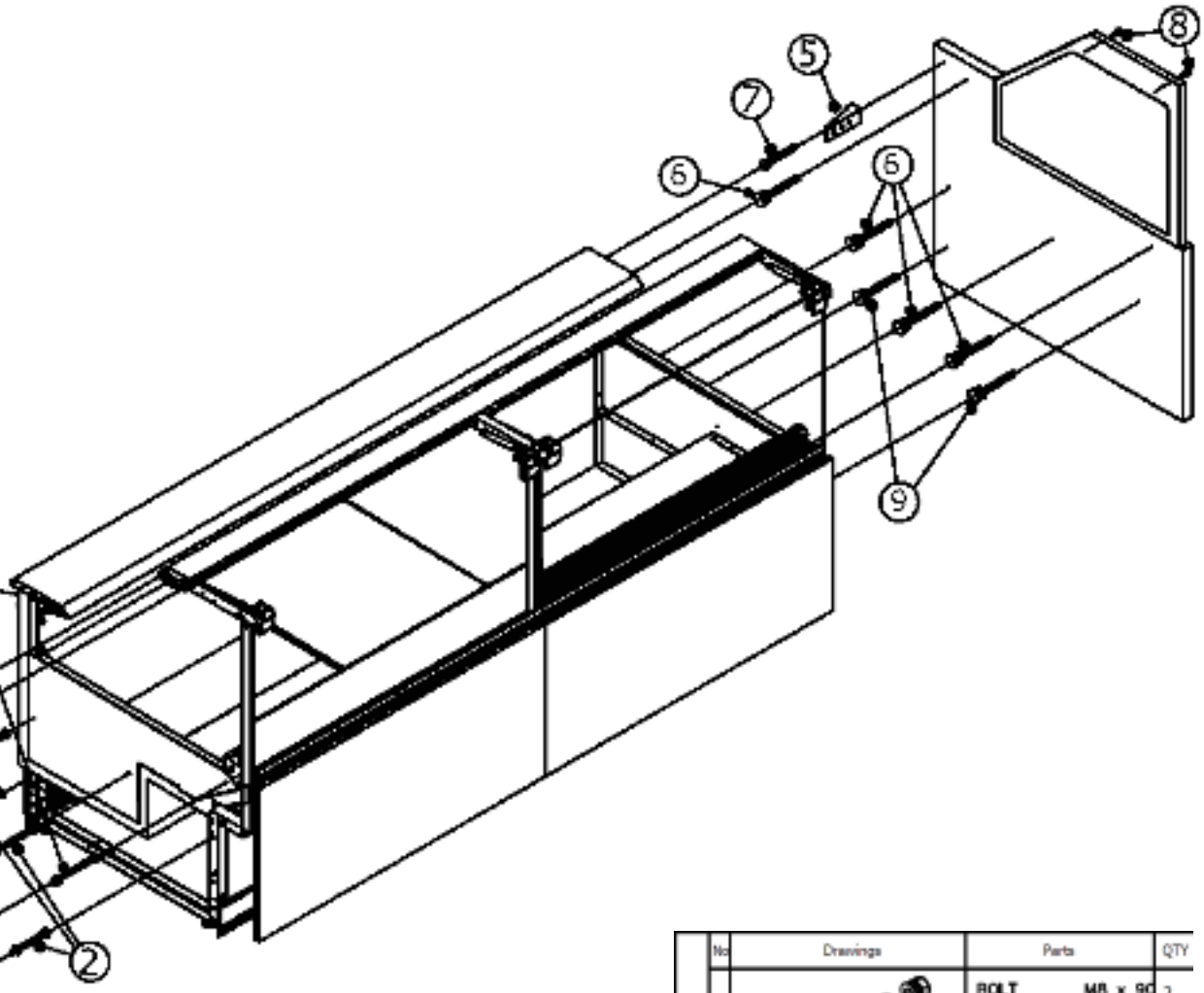

	No	Drawings	Parts	QTY
MULTIPLEXING KIT	1	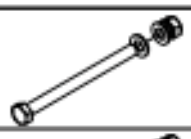	BOLT M8 x 90	2
			WASHER M8	4
			NUT M8	2
	2	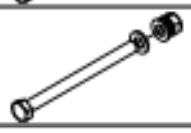	BOLT M8 x 120	3
			WASHER M8	6
			NUT M8	3
	3		PIN 60 PIN	2
	4		ALYAN BOLT M8 x 60	1
			NUT M8	1
	5	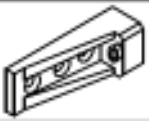	PULLING CASTING	2

1300 276 642 bromicrefrigeration.com.au BROMIC REFRIGERATION

KW COMMERCIAL KITCHEN
Distributed by KW Commercial Kitchen | 1300 001 366
www.kwcommercial.com.au | sales@kwcommercial.com.au

10. ACCESSORIES LIST

Bromic offers the following additional accessories for the Deli Display Fridges. Accessories can be ordered through your local Bromic sales representative.

- Knife Holder
- Bag Holder
- Paper Holder
- Scale Deck
- Cutting Board

Installation

1. **2x bolts slide along the rail on the rear of the Deli Display. Insert them on either end of the rail.**
   The accessories is then fit onto the two bolts via two pre-drilled holes.
2. **2x wing nuts are used to hold the accessory in place.**
3. **The accessory can be slid back and forth along the rail.**

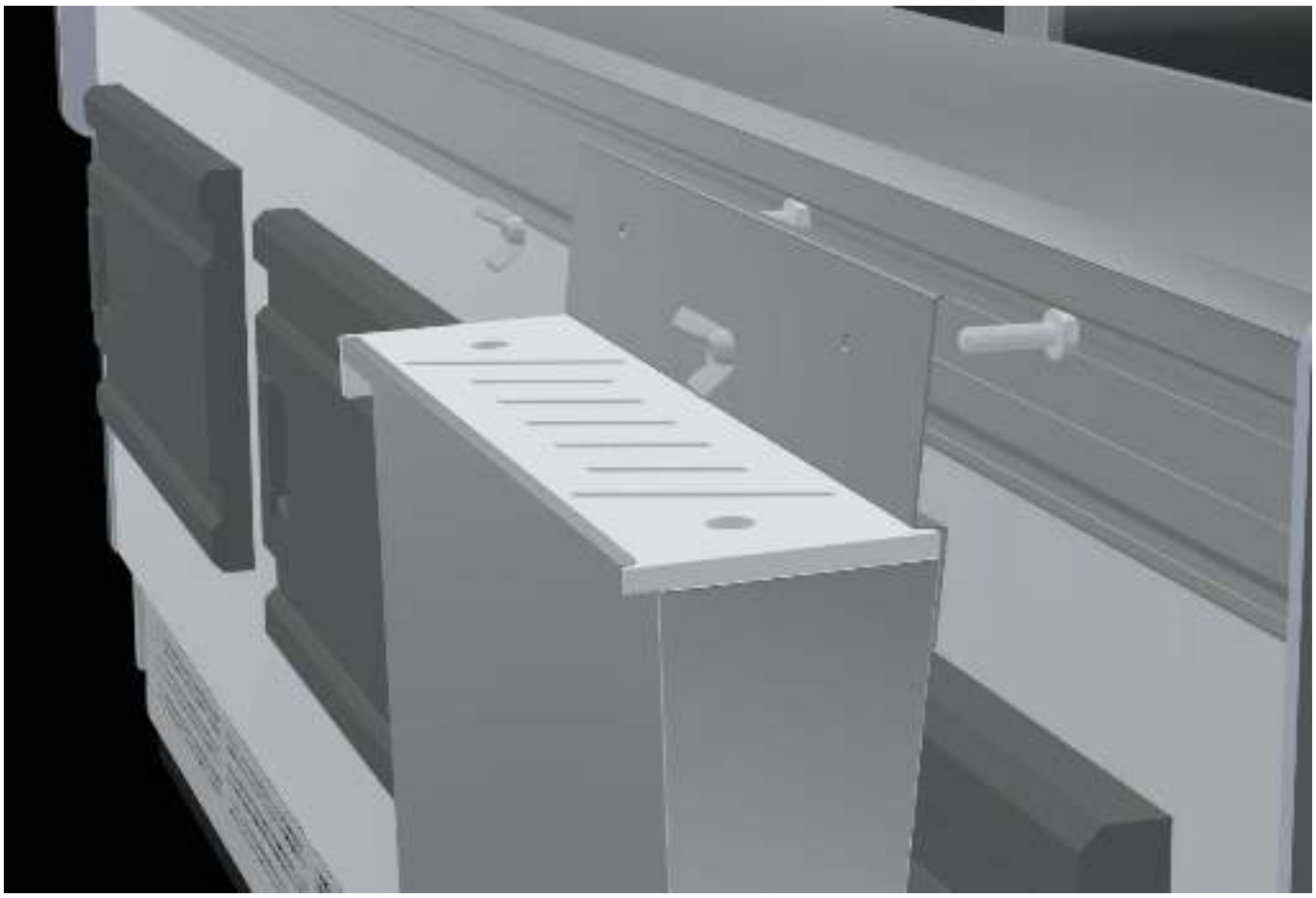

11. ENVIRONMENTAL AND DISPOSAL NOTES

These refrigerated cabinets are designed to high standards of environmental protection and recycling convenience. Cyclopentane, an environmentally friendly foaming agent, has been used. Cyclopentane is distinguished by zero ozone depletion potential (ODP) and zero global warming potential (GWP). The refrigerant used and contained within a hermetically tight circuit is environmentally friendly and does not contain chlorine and zero ODP.

The device must be disposed of in accordance with applicable regulations. The WEEE regulations must be observed.

In the interest of preventing environmental nuisance and promoting re-use of the high quality materials employed, used commercial refrigeration equipment must be collected for expert disposal and recycling. Therefore, observe the following disposal regulations:

- The cabinet must not be discarded with regular waste.
- The refrigeration circuit must not be damaged.
- Before disposal, make it unserviceable by disconnecting the power plug and cutting off the power cable.
- Consult your local authorities or authorised dealers for details of collection and disposal facilities.
- Children are often unable to recognise the dangers associated with commercial refrigeration equipment. Proper supervision must be maintained and children must be prevented from playing with discarded refrigerated cabinets.
- The refrigerant used in all appliances covered by this manual are flammable.

12. WARRANTY

EXTRA CARE
WARRANTY SERVICE

All Bromic products are manufactured to the highest quality standard and are supported by our Extra Care Service Warranty, including guarantees against any material or workmanship defects; guarantees that cannot be excluded under Australian Consumer Law.

Warranty Terms vary across the range. Please ensure you are familiar with the Terms and Conditions that apply to the purchase of your Bromic product by referring to the Warranty Policy included with your purchased product.

Alternatively, you can also download the Warranty Policy at www.bromicgroup.com/warranty-information

HOW TO PLACE A SERVICE REQUEST

- Please call 1300 276 642 to place a warranty service request and let the operator know whether you need Priority A or B service. More information can be found below.
- Ensure you have the serial number of your product ready before contacting us.
- The serial number of your product can be found on a compliance plate located on the inside right and at the rear of your cabinet.

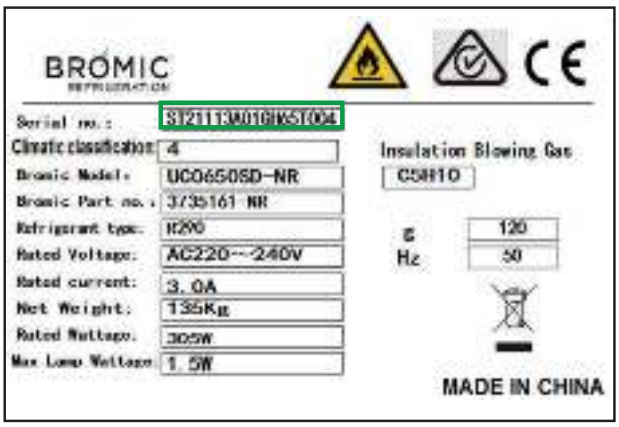

Compliance Plate Example 1

SERVICE REQUEST PRIORITY

PRIORITY A SERVICE

When the unit is NOT performing its primary function such as cooling or heating, or presents an OH&S or food safety risk

PRIORITY B SERVICE

When the unit is performing its primary function, and presents no OH&S or food safety risk. i.e. lights, gaskets. locks, door adjustment

SERVICE CALL PLACED BEFORE MIDDAY

Priority A - Technician to attend site within 4 hours
Priority B - Technician to attend site within 8 business hours

SERVICE CALL PLACED AFTER MIDDAY

Priority A - Technician attends site before midday on the following business day

Priority B - Technician attends site before 4pm on the following business day

BROMIC REFRIGERATION
10 Phiney Place, Ingleburn (Sydney)
NSW 2565 Australia
T. 1300 276 642

For further product information
bromicrefrigeration.com.au