PRODUCT DOCUMENT PACK

Prepared and distributed by KW Commercial Kitchen

PRODUCT

Giorik FE9221T Electric Fryer

Model / SKU: FE9221T

KW COMMERCIAL KITCHEN

7/72 Canterbury Road, Bankstown NSW 2200

Phone 1300 001 366

Email sales@kwcommercial.com.au

Web www.kwcommercial.com.au

Scan for the current KW product page

DOCUMENT NOTICE

The supplier document begins on the next page. KW contact branding is added in a separate footer area and does not replace the supplier's instructions, specifications or warranty terms.

Official supplier source: /media/products/81970/documents/spec_sheet-1.pdf

GIORIK
INNOVATIVE COOKING EQUIPMENT SINCE 1963

FE9221T

Fryer - Electric, Double Pan, 21 + 21 Litre / Base

900

Product Information:

- Class leading, European style, professional quality and reliability since 1963
- 900 series, electric 2 x 21 litre, double pan fryer (42kW)
- Immersed heating elements with Hi-limit temperature protection and manual reset. Rotating mechanism to facilitate easy cleaning inside the tank.
- Temperature regulation via thermostat (100°C – 195°C)
- Thermostat bulbs protected against accidental impact
- Cold zone on the bottom of the tank to collect residues and prevent tainting of oil
- 2x 310x444mm single tanks with oil drainage via ball valve into integrated oil capture drawer
- Indicator lights to monitor the correct operation of the appliance
- Robust 304 grade stainless steel construction with rounded corners for improved cleaning
- Pressed top work surface with raised edges to protect from overflow
- Enclosed base with front access doors
- Height adjustable stainless steel feet for a 900mm working height
- Supplied with removable mesh basket support, 4x 146x400x120mm twin baskets and lids
- Additional baskets sold separately (see below)
- 24-month warranty

General Drawing:

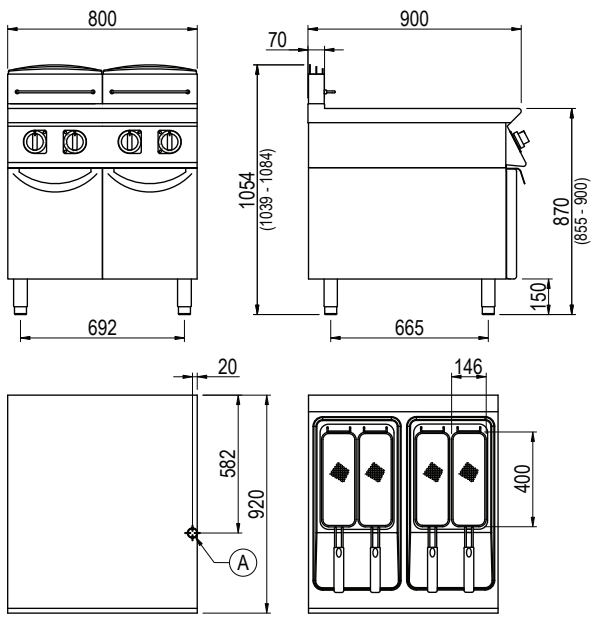

Optional extra basket configuration:

SPGI.2017298
x 2 required for double pan

Specifications:

Model	FE9221T
W x D x H (mm)	800 x 920 x 1054
Weight	145kg
Oil Capacity	2 x 21L
Packed Dimensions (mm)	1025 x 825 x 1200
Packed Weight (mm)	157kg
Electrical Connection	3Ø + N + E 415VAC / 50Hz / 42kW

Legend:

A	Electrical Connection

Due to continuous product research and development,
the information contained herein is subject to change without notice.

Revision: 01 - 15/11/2021 - A

www.stoddart.com.au
www.stoddart.co.nz

STODDART®