PRODUCT DOCUMENT PACK

Prepared and distributed by KW Commercial Kitchen

PRODUCT

Hoshizaki 97000007 RTE-120SDA-GN 265L 2 Door Underbench Gastronorm Fridge

Model / SKU: 97000007

KW COMMERCIAL KITCHEN

7/72 Canterbury Road, Bankstown NSW 2200

Phone 1300 001 366

Email sales@kwcommercial.com.au

Web www.kwcommercial.com.au

Scan for the current KW product page

DOCUMENT NOTICE

The supplier document begins on the next page. KW contact branding is added in a separate footer area and does not replace the supplier's instructions, specifications or warranty terms.

Official supplier source: /media/products/82198/documents/other-4.pdf

DATE	24.08.2024
REV NO	A
DOC NO	WRL/RI/E/02

REACH-IN REFRIGERATOR / FREEZER

MODELS: HRWE127 & HRWE147- SERIES

Table of Contents

1. PRODUCT NOMENCLATURE 3
2. REFRIGERATOR ASSEMBLY (HRWE127LS4 &HRWE147LS4) 4
3. REFRIGERATOR ASSEMBLY (HRWE127LS4-LG) 6
4. REFRIGERATOR ASSEMBLY (HRWE147LS4-LDGN) 8
5. EVAPORATOR ASSEMBLY 10
6. EVAPORATOR MOTOR ASSEMBLY 11
7. CONDENSING UNIT ASSEMBLY 12
8. DRAIN PAN FAN DUCT ASSEMBLY: 14
9. CONDENSER FAN MOTOR ASSEMBLY: 15
10. POWER BOX ASSEMBLY 16
11. CENTER PILLAR ASSEMBLY HALF DOOR 17
12. DOOR ASSEMBLY LT HALF DOOR BOTTOM 19
13. DOOR ASSEMBLY RT HALF DOOR TOP 20
14. DOOR ASSEMBLY LT HALF DOOR TOP 21
15. DOOR ASSEMBLY RT LONG DOOR 22
16. DOOR ASSEMBLY LT LONG DOOR 23
17. DOOR ASSEMBLY RT LONG GLASS 24
18. DOOR ASSEMBLY LT LONG GLASS 25
19. CANOPY ASSEMBLY 26
20. OPTIONAL PARTS (Replace Castor by) 27
21. REVISION DETAILS: 28

KW COMMERCIAL KITCHEN
Distributed by KW Commercial Kitchen | 1300 001 366
www.kwcommercial.com.au | sales@kwcommercial.com.au

1. PRODUCT NOMENCLATURE

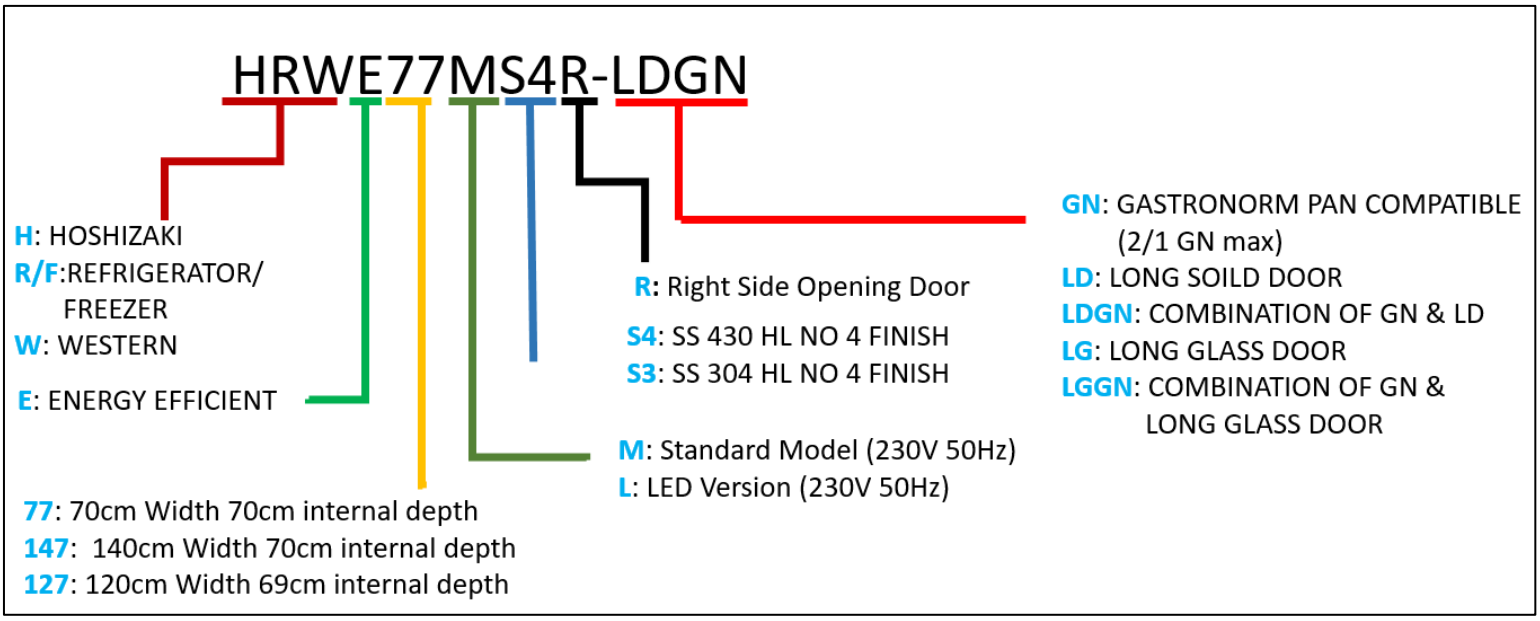

2. REFRIGERATOR ASSEMBLY (HRWE127LS4 &HRWE147LS4)

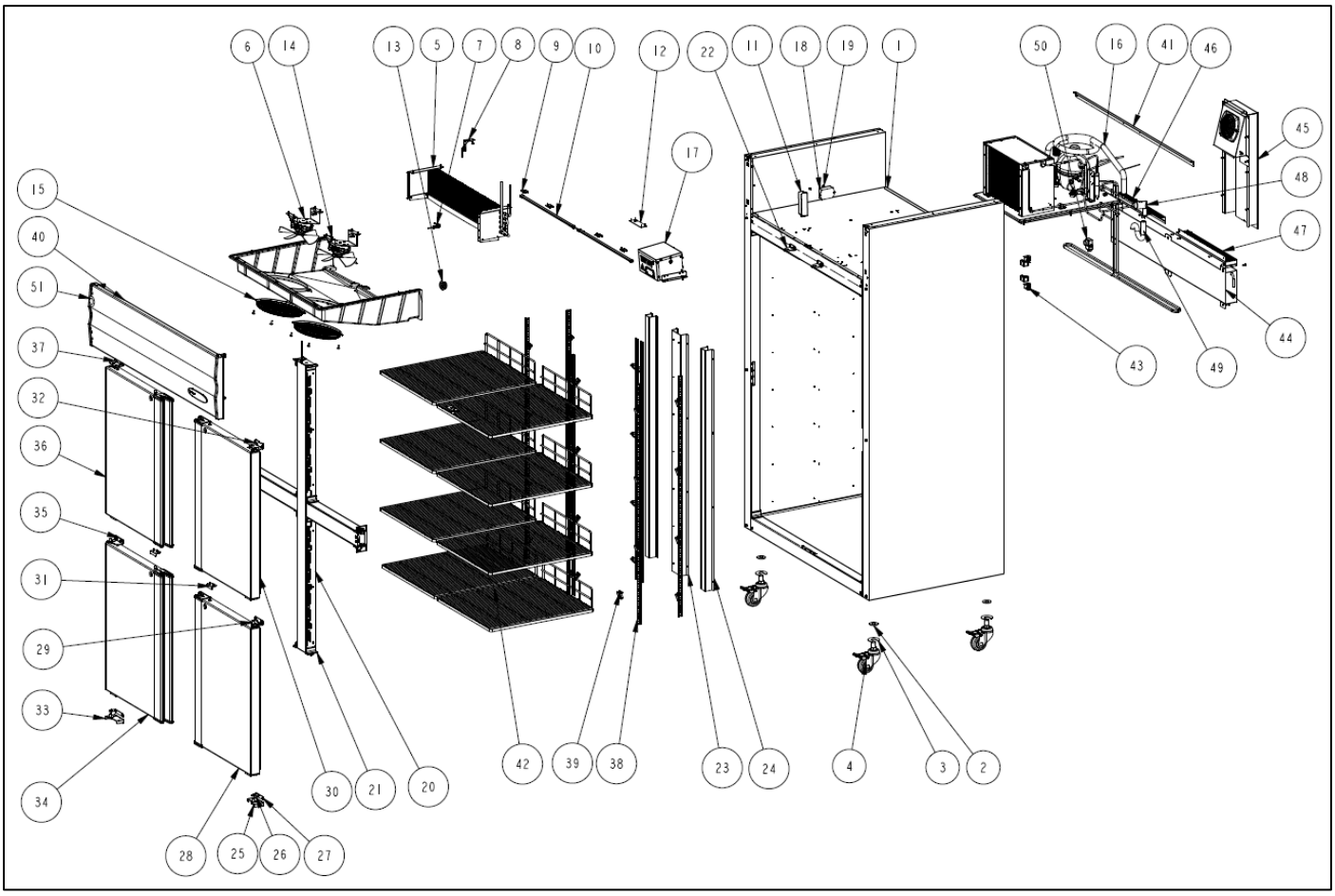

Distributed by KW Commercial Kitchen | 1300 001 366
www.kwcommercial.com.au | sales@kwcommercial.com.au

HRWE127LS4 & HRWE147LS-SERIES

INDEX NO.	SAP CODE	DRAWING NO	PART/ASSEMBLY	DESCRIPTION	UOM	HRWE127LS4	HRWE147LS4
1	1136702	0712844	PART	FOAMED CABINET	NOS	1	-
	1136697	0712850	PART	FOAMED CABINET	**NOS**	-	1
2	1512662	0117998	PART	PLAIN WASHER	NOS	4	4
3	1512663	0117999	PART	CASTOR SPACER	NOS	4	4
4	1512660	0506266	PART	CASTOR WHEEL	NOS	4	4
5	**1137063**	**0711478**	**ASSEMBLY**	**EVAPORATOR ASSEMBLY**	**NOS**	**1**	**1**
6	**-**	**0712904**	**ASSEMBLY**	**EVAPORATOR MOTOR ASSEMBLY**	**NOS**	**2**	**2**
7	1519186	0222320	PART	SENSOR CLIP COIL	NOS	1	1
8	1514594	0202684	PART	SENSOR HOLDING CLAMP	NOS	1	1
9	1525166	0203416	PART	LED BRACKET TOP	NOS	4	4
10	1525322	0602660	PART	PL LED BAR C-TYPE CV 2.0W L510MM	NOS	2	2
11	1133371	0602595	PART	LED DRIVER 20W 24VDC	NOS	1	1
12	1111141	0115768	PART	LED CONNECTOR BOX COVER LT	NOS	1	-
	1510398	0201284	PART	LED CONNECTOR BOX COVER PLASTIC	NOS	-	1
13	1510163	0201310	PART	DRAIN GASKET	NOS	1	1
14	1524170	0201888	PART	DEW COLLECTOR	NOS	1	1
15	1523567	0201269	PART	EVAP FAN GUARD	NOS	2	2
16	**1136698**	**0712898**	**ASSEMBLY**	**CONDENSING UNIT ASSEMBLY**	**NOS**	**1**	**1**
17	**1136469**	**0712974**	**ASSEMBLY**	**POWER BOX ASSEMBLY**	**NOS**	**1**	**1**
18	1111854	0600807	PART	EMI FILTER 6A	NOS	1	1
19	1502183	-	PART	SCREW T4 X 12 (T4) SUS	NOS	2	2
20	-	**0702511**	**ASSEMBLY**	**CENTER PILLAR ASSEMBLY**	**NOS**	**1**	**-**
	-	**0701474**	**ASSEMBLY**	**CENTER PILLAR ASSEMBLY**	**NOS**	**-**	**1**
21	1507657	0245637	PART	SUS INSIDE CORNER	NOS	8	8
22	1115709	0117299	PART	DOOR LOCK BKT	NOS	2	2
23	1132475	0121668	PART	REAR MID CHNL	NOS	1	1
24	1131728	0121383	PART	STOPER CHNL	NOS	2	2
25	1520365	0506809	PART	BOTTOM HINGE RT	NOS	1	1
26	1508146	0201703	PART	SUS PLASTIC HINGE COLLAR - HINGE	NOS	4	4
27	1508739	0201166	PART	SUS DOOR SPACER	NOS	6	6
28	**1116003**	**0703651**	**ASSEMBLY**	**RT DOOR ASSEMBLY BOTTOM**	**NOS**	**1**	**-**
	1115999	**0703652**	**ASSEMBLY**	**RT DOOR ASSEMBLY BOTTOM**	**NOS**	**-**	**1**
29	1508029	0502998	PART	SUS MIDDLE HINGE RT	NOS	1	1
30	**1116008**	**0703651**	**ASSEMBLY**	**RT DOOR ASSEMBLY TOP**	**NOS**	**1**	**-**
	1115997	**0703652**	**ASSEMBLY**	**RT DOOR ASSEMBLY TOP**	**NOS**	**-**	**1**
31	1515116	0117786	PART	DOOR LOCK STOPPER BKT	NOS	2	2
32	1510964	0506838	PART	TOP HINGE RT	NOS	1	1
33	1520364	0506809	PART	BOTTOM HINGE LT	NOS	1	1
34	**1116004**	**0703651**	**ASSEMBLY**	**LT DOOR ASSEMBLY BOTTOM**	**NOS**	**1**	**-**
	1115995	**0703652**	**ASSEMBLY**	**LT DOOR ASSEMBLY BOTTOM**	**NOS**	**-**	**1**
35	1508028	0502998	PART	MIDDLE HINGE LT	NOS	1	1
36	**1116009**	**0703651**	**ASSEMBLY**	**LT DOOR ASSEMBLY TOP**	**NOS**	**1**	**-**
	1116001	**0703652**	**ASSEMBLY**	**LT DOOR ASSEMBLY TOP**	**NOS**	**-**	**1**
37	1510965	0506837	PART	TOP HINGE LT	NOS	1	1
38	1511531	0505442	PART	SHELF HOLDER RACK	NOS	8	-
	1524211	0507079	PART	SHELF HOLDER RACK	NOS	-	8
39	1513377	0505879	PART	HSU SHELF CLIP	NOS	33	33
40	**1113457**	**0702503**	**ASSEMBLY**	**CANOPY ASSEMBLY**	**NOS**	**1**	**-**
	1114866	**0702500**	**ASSEMBLY**	**CANOPY ASSEMBLY**	**NOS**	**-**	**1**
41	1112494	0116099	PART	CANOPY SUPPORT ANGLE	NOS	1	1
42	1524212	0507078	PART	PNTD STRIP SHELF	NOS	8	-
	1524211	0507079	PART	PNTD STRIP SHELF	NOS	-	8
43	1506586	0200997	PART	RUBBER VIBRATION PAD SILICON	NOS	7	7
44	1527040	0712845	PART	SS DRAIN PAN	NOS	1	1
45	**1137078**	**0712829**	**ASSEMBLY**	**DRAIN PAN FAN DUCT ASSEMBLY**	**NOS**	**1**	**1**
46	1136993	0122202	PART	DRAIN PAN PIPE HOLDER RT	NOS	1	1
47	1136994	0122203	PART	DRAIN PAN PIPE HOLDER LT	NOS	1	1
48	1526893	0222752	PART	DRAIN PIPE ELBOW	NOS	1	1
49	NEW CODE	0222754	PART	DRAIN PIPE OUTLET	NOS	1	1
50	1519474	0506618	PART	AIR VENT VALVE	NOS	1	1
51	1510783	0505553	PART	5 STAR DOME PENGUIN RT 50MM	NOS	1	1
52	1119469	0601230	PART	SENSOR HARNESS	NOS	1	1
53	1507714	0600575	PART	EVAPORATOR MOTOR HARNESS	NOS	1	1
54	1136343	0601857	PART	ICF EXT HARNESS	NOS	1	1
55	1110714	0600795	PART	DOOR SWITCH HARNESS	NOS	1	1
56	1110716	0600794	PART	DOOR SWITCH HARNESS	NOS	1	1
57	1527286	0507340	PART	PWR CORD COT AU/NZ TYPE-I 10A 1MM2/3M/TT	NOS	1	1

KW COMMERCIAL KITCHEN
Distributed by KW Commercial Kitchen | 1300 001 366
www.kwcommercial.com.au | sales@kwcommercial.com.au

3. REFRIGERATOR ASSEMBLY (HRWE127LS4-LG)

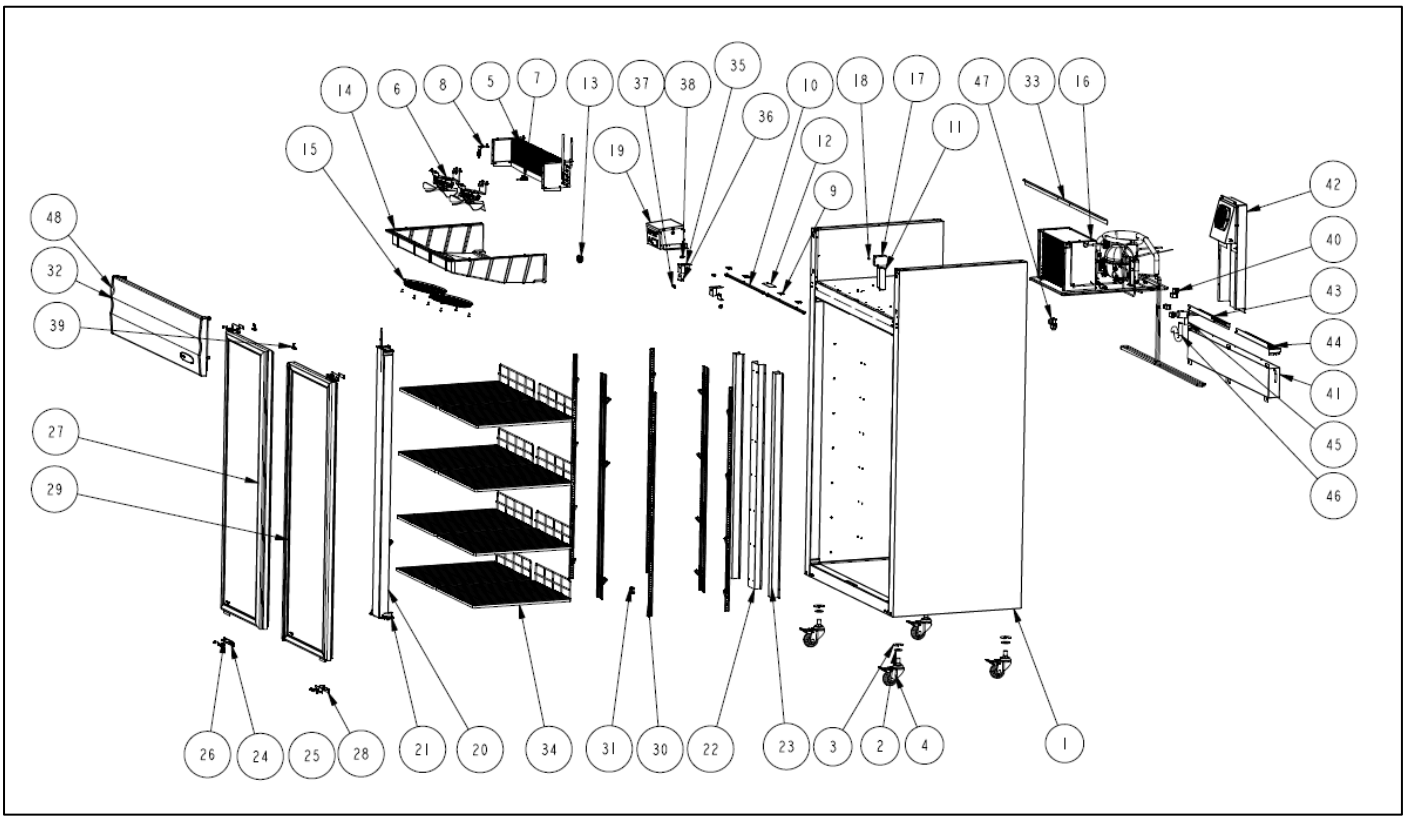

HRWE127LS4 & HRWE147LS-SERIES

INDEX NO.	SAP CODE	DRAWING NO	PART/ASSEMBLY	DESCRIPTION	UOM	HRWE127LS4-LG
1	1136987	0712964	PART	FOAMED CABINET	NOS	1
2	1512662	0117998	PART	PLAIN WASHER OD40 x ID20 x TH3	NOS	4
3	1512663	0117999	PART	WHEEL SPACER OD55 x ID20 x TH2	NOS	4
4	1512660	0506266	PART	CASTOR WHEEL	NOS	4
5	**1137063**	**0711478**	**ASSEMBLY**	**EVAPORATOR ASSEMBLY**	**NOS**	**1**
6	**-**	**0712904**	**ASSEMBLY**	**EVAPORATOR MOTOR ASSEMBLY**	**NOS**	**2**
7	1519186	0222320	PART	SENSOR CLIP COIL	NOS	1
8	1514594	0202684	PART	SENSOR HOLDING CLAMP	NOS	1
9	1525166	0203416	PART	BRACKET TOP	NOS	4
10	1525322	0602660	PART	PL LED BAR C-TYPE CV 2.0W L510MM	NOS	2
11	1133371	-	PART	LED DRIVER 20W 24VDC	NOS	1
12	1111141	0115768	PART	LED CONNECTOR BOX COVER LT	NOS	1
13	1510163	0201310	PART	DRAIN GASKET	NOS	1
14	1524170	0201888	PART	DEW COLLECTOR	NOS	1
15	1523567	0201269	PART	EVAP FAN GUARD	NOS	2
16	**1136698**	**0712898**	**ASSEMBLY**	**CONDENSING UNIT ASSY**	**NOS**	**1**
17	1111854	-	PART	EMI FILTER 6A	NOS	1
18	1502183	-	PART	SCREW T4 X 12 (T4) SUS	NOS	2
19	**1136469**	**0712974**	**ASSEMBLY**	**POWER BOX ASSEMBLY**	**NOS**	**1**
20	1113953	0704241	PART	FOAMED VERTICAL CENTER PILLER ASSEMBLY	NOS	1
21	1507657	0245637	PART	SUS INSIDE CORNER	NOS	4
22	1132475	0121668	PART	SS REAR MID CHNL	NOS	1
23	1131728	0121383	PART	SS STOPER CHNL	NOS	2
24	1516321	0506206	PART	BOTTOM HINGE LT	NOS	1
25	1516317	0201924	PART	PC HINGE SPACER	NOS	4
26	1500923	0502613	PART	HINGE COLLAR BUSH	NOS	2
27	**1118000**	**0704198**	**ASSEMBLY**	**GLASS DOOR ASSEMBLY LT**	**NOS**	**1**
28	1516320	0506206	PART	BOTTOM HINGE RT	NOS	1
29	**1117999**	**0704198**	**ASSEMBLY**	**GLASS DOOR ASSEMBLY RT**	**NOS**	**1**
30	1511531	0505442	PART	SHELF HOLDER RACK	NOS	8
31	1513377	0505879	PART	HSU SHELF CLIP	NOS	32
32	**1137007**	**0712973**	**ASSEMBLY**	**CANOPY ASSEMBLY**	**NOS**	**1**
33	1112494	0116099	PART	CANOPY SUPPORT ANGLE	NOS	1
34	1524212	0507078	PART	PNTD STRIP SHELF	NOS	8
35	1136483	0122283	PART	DOOR SWITCH COVER	NOS	2
36	1136515	0122218	PART	DOOR SWITCH BRACKET	NOS	2
37	1123451	0601473	PART	MGN SWITCH HARNESS	NOS	1
38	1508085	0201092	PART	RUBBER GROMET	NOS	2
39	1505675	0113229	PART	SPACER FOR MAGNETIC DOOR SWITCH	NOS	2
40	1506586	0200997	PART	RUBBER VIBRATION PAD SILICON	NOS	4
41	1527040	0712845	PART	SS DRAIN PAN	NOS	1
42	**1137078**	**0712829**	**ASSEMBLY**	**DRAIN PAN FAN DUCT ASSEMBLY**	**NOS**	**1**
43	1136993	0122202	PART	DRAIN PAN COVER RT	NOS	1
44	1136994	0122203	PART	DRAIN PAN COVER LT	NOS	1
45	1526893	0222752	PART	DRAIN PIPE ELBOW	NOS	1
46	NEW CODE	0222754	PART	DRAIN PIPE OUTLET	NOS	1
47	1519474	0506618	PART	AIR VENT VALVE	NOS	1
48	1510783	0505553	PART	5 STAR DOME PENGUIN RT 50MM	NOS	1
49	1119469	0601230	PART	SENSOR HARNESS	NOS	1
50	1507714	0600575	PART	EVAPORATOR MOTOR HARNESS	NOS	1
51	1136343	0601857	PART	ICF EXT HARNESS	NOS	1
52	1527286	0507340	PART	PWR CORD COT AU/NZ TYPE-I 10A 1MM2/3M/TT	NOS	1

KW COMMERCIAL KITCHEN
Distributed by KW Commercial Kitchen | 1300 001 366
www.kwcommercial.com.au | sales@kwcommercial.com.au

4. REFRIGERATOR ASSEMBLY (HRWE147LS4-LDGN)

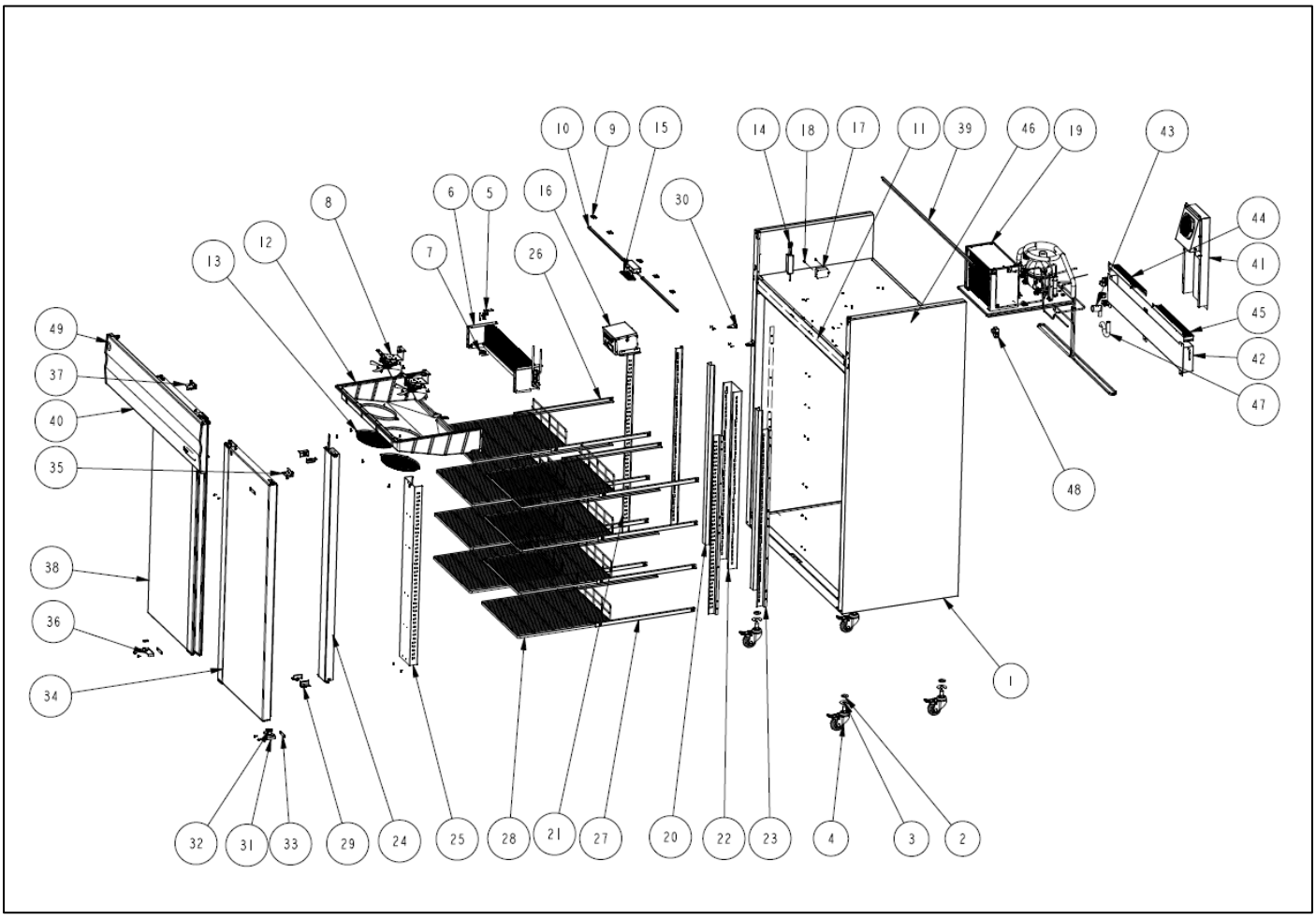

HRWE127LS4 & HRWE147LS-SERIES

INDEX NO.	SAP CODE	DRAWING NO	PART/ASSEMBLY	DESCRIPTION	UOM	HRWE127LS4-LDGN
1	1136988	0712968	PART	FOAMED CABINET	NOS	1
2	1512662	0117998	PART	PLAIN WASHER	NOS	4
3	1512663	0117999	PART	WHEEL SPACER	NOS	4
4	1512660	0506266	PART	CASTOR WHEEL	NOS	4
5	1514594	0202684	PART	SENSOR HOLDING CLAMP	NOS	1
6	**1137063**	**0711478**	**ASSEMBLY**	**EVAPORATOR ASSEMBLY**	**NOS**	**1**
7	1519186	0222320	PART	SENSOR CLIP COIL	NOS	1
8	**-**	**0712904**	**ASSEMBLY**	**EVAPORATOR MOTOR ASSEMBLY**	**NOS**	**2**
9	1525166	0203416	PART	LED BRACKET TOP	NOS	5
10	1525322	00602660	PART	PL LED BAR C-TYPE CV 2.0W L510MM	NOS	2
11	1510163	0201310	PART	DRAIN GASKET	NOS	1
12	1524170	0201888	PART	DEW COLLECTOR	NOS	1
13	1523567	0201269	PART	EVAP FAN GUARD	NOS	2
14	1133371	-	PART	LED DRIVER 20W 24VDC	NOS	1
15	1510398	0201284	PART	MID LED CONNECTOR BOX COVER	NOS	1
16	**1136469**	**0712974**	**ASSEMBLY**	**POWER BOX ASSEMBLY**	**NOS**	**1**
17	1111854	0600807	PART	EMI FILTER 6A	NOS	1
18	1502183	-	PART	SCREW T4 X 12 (T4) SUS	NOS	2
19	**1136698**	**0712898**	**ASSEMBLY**	**CONDENSING UNIT ASSEMBLY**	**NOS**	**1**
20	1113062	0116335	PART	SUPPORT CHANNEL	NOS	2
21	1117560	0117055	PART	RAIL SUPPORT-GN-1 FRONT UPRIGHT LD	NOS	2
22	1117562	0117057	PART	SS430 GN RACK MID BACK	NOS	1
23	1117561	0117056	PART	SS430 GN RACK BACK LT/RT	NOS	2
24	**1126252**	**0710120**	**ASSEMBLY**	**CENTER PILLAR ASSEMBLY LD**	**NOS**	**1**
25	1117563	0117058	PART	SS430 GN RACK MID FRT-LD	NOS	1
26	1112770	0116861	PART	C TYPE RAIL LT GN	NOS	8
27	1112769	0116860	PART	C TYPE RAIL RT GN	NOS	8
28	1524214	0507080	PART	PNTD STRIP SHELF-GN	NOS	8
29	1507657	0245637	PART	SUS INSIDE CORNER	NOS	4
30	1115709	0117299	PART	DOOR LOCK BKT	NOS	2
31	1520365	0506809	PART	BOTTOM HINGE RT	NOS	1
32	1508146	0201703	PART	SUS PLASTIC HINGE COLLAR - HINGE	NOS	2
33	1508739	0201166	PART	SUS DOOR SPACER	NOS	4
34	**1115998**	**0710125**	**ASSEMBLY**	**LONG DOOR ASSEMBLY RT**	**NOS**	**1**
35	1510964	0506838	PART	TOP HINGE RT	NOS	1
36	1520364	0506809	PART	BOTTOM HINGE LT	NOS	1
37	1510965	0506837	PART	TOP HINGE LT	NOS	1
38	**1116002**	**0710125**	**ASSEMBLY**	**LONG DOOR ASSEMBLY LT**	**NOS**	**1**
39	1107278	0114122	PART	CANOPY SUPPORT ANGLE 4D	NOS	1
40	1114866	0702500	**ASSEMBLY**	CANOPY ASSY	NOS	1
41	**1137078**	**0712829**	**ASSEMBLY**	**DRAIN PAN FAN DUCT ASSEMBLY**	**NOS**	**1**
42	1527040	0712845	PART	SS DRAIN PAN	NOS	1
43	1526893	0222752	PART	DRAIN PIPE ELBOW	NOS	1
44	1136993	0122202	PART	DRAIN PAN COVER RT	NOS	1
45	1136994	0122203	PART	DRAIN PAN COVER LT	NOS	1
46	1506586	0200997	PART	RUBBER VIBRATION PAD SILICON	NOS	6
47	NEW CODE	0222754	PART	DRAIN PIPE OUTLET	NOS	1
48	1519474	0506618	PART	AIR VENT VALVE	NOS	1
49	1510783	0505553	PART	5 STAR DOME PENGUIN RT 50MM	NOS	1
50	1119469	0601230	PART	SENSOR HARNESS	NOS	1
51	1507714	0600575	PART	EVAPORATOR MOTOR HARNESS	NOS	1
52	1136343	0601857	PART	ICF EXT HARNESS	NOS	1
53	1110714	0600795	PART	DOOR SWITCH HARNESS	NOS	1
54	1110716	0600794	PART	DOOR SWITCH HARNESS	NOS	1
55	1527286	0507340	PART	PWR CORD COT AU/NZ TYPE-I 10A 1MM2/3M/TT	NOS	1

KW COMMERCIAL KITCHEN
Distributed by KW Commercial Kitchen | 1300 001 366
www.kwcommercial.com.au | sales@kwcommercial.com.au

5. EVAPORATOR ASSEMBLY

(DRAWING NO. 0711478)

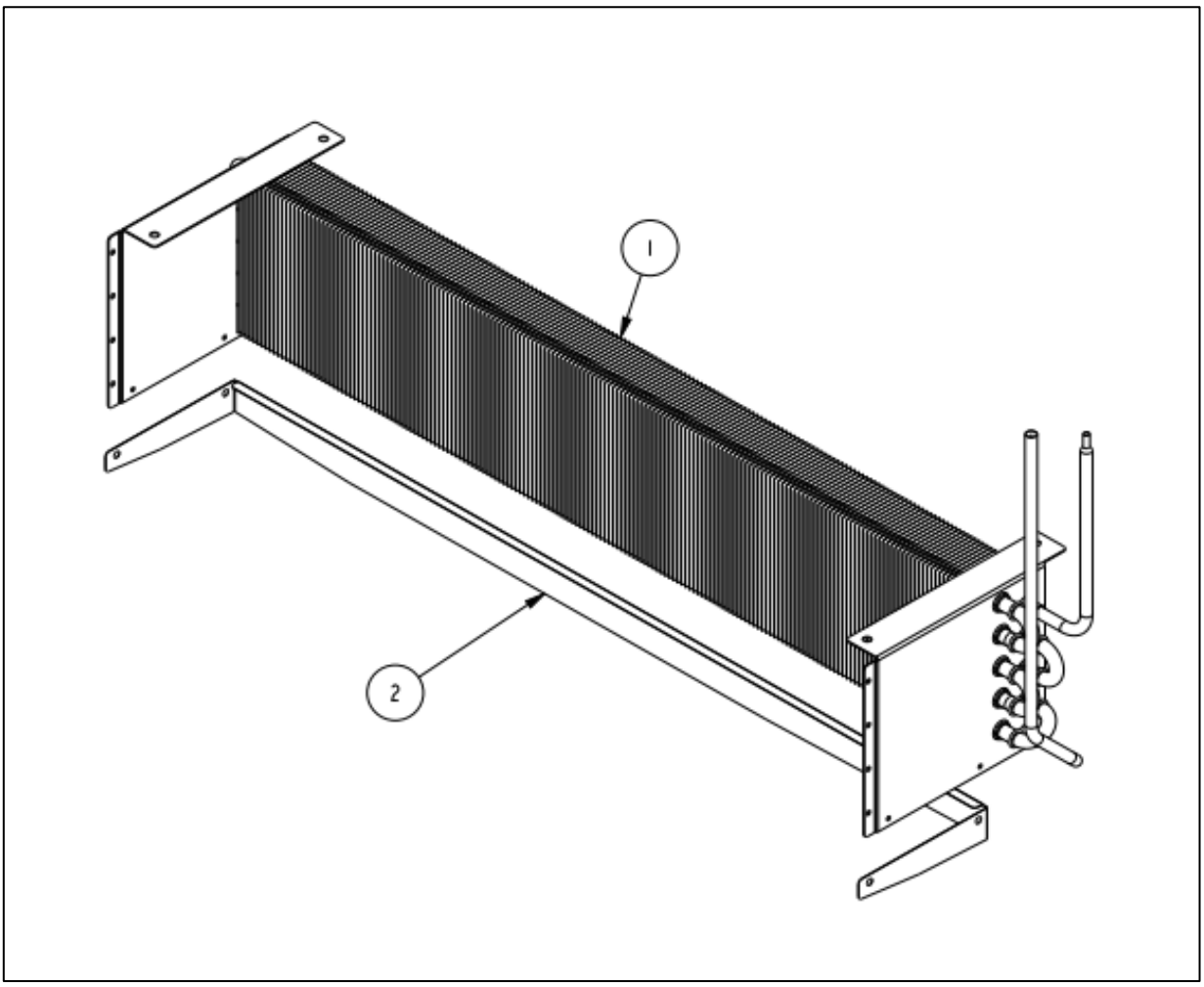

INDEX NO.	SAP CODE	DRAWING NO	PART/ ASSEMBLY	DESCRIPTION	UOM	HRWE127LS4 SERIES	HRWE147LS4 SERIES
1	1129032	0507017	PART	EVAPORATOR	NOS	1	1
2	1131479	0121551	PART	COIL BLANK OFF	NOS	1	1
3	1502189	-	PART	SCREW T4 X12 (T4) SUS	NOS	2	2

Distributed by KW Commercial Kitchen | 1300 001 366
www.kwcommercial.com.au | sales@kwcommercial.com.au

6. EVAPORATOR MOTOR ASSEMBLY

(DRAWING NO. 0712904)

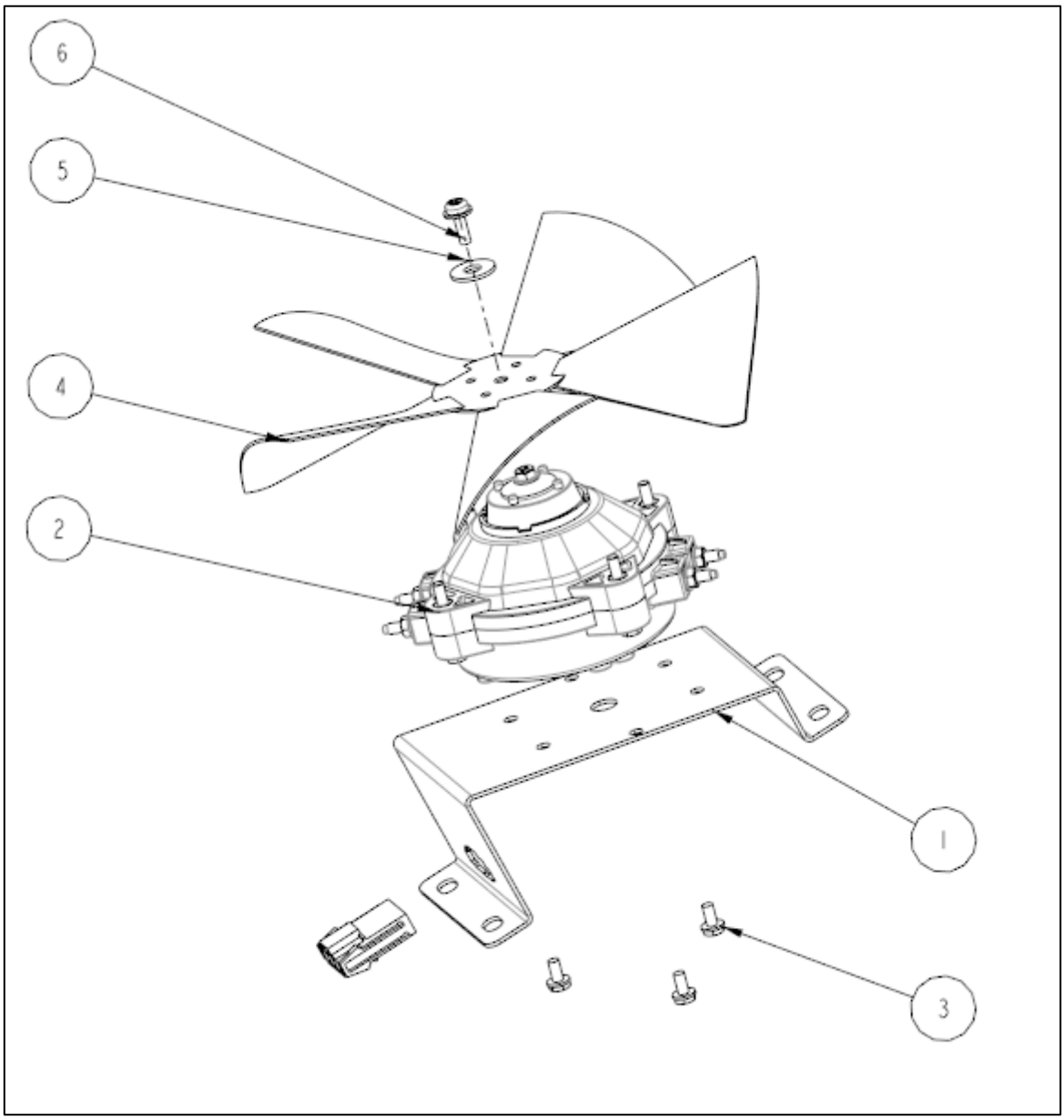

INDEX NO.	SAP CODE	DRAWING NO	PART/ ASSEMBLY	DESCRIPTION	UOM	HRWE127LS4 SERIES	HRWE147LS4 SERIES
1	1136473	0122219	PART	EVAP MOTOR STAND	NOS	1	1
2	1525005	-	PART	EC MOTOR SAIWEI NEC4810	NOS	1	1
3	1512981	-	PART	SCREW STAR HEX HEAD M4X8 (T2) SUS	NOS	3	3
4	1116260	0300876	PART	IMPELLER-WRL 5 X 9" V 28 DEG	NOS	1	1
5	1502216	-	PART	WASHER W8 SUS	NOS	1	1
6	1506257	-	PART	SCREW M4 X 12 HEX HD PHILIPS	NOS	1	1

KW COMMERCIAL KITCHEN
Distributed by KW Commercial Kitchen | 1300 001 366
www.kwcommercial.com.au | sales@kwcommercial.com.au

7. CONDENSING UNIT ASSEMBLY

(DRAWING NO. 0712898)

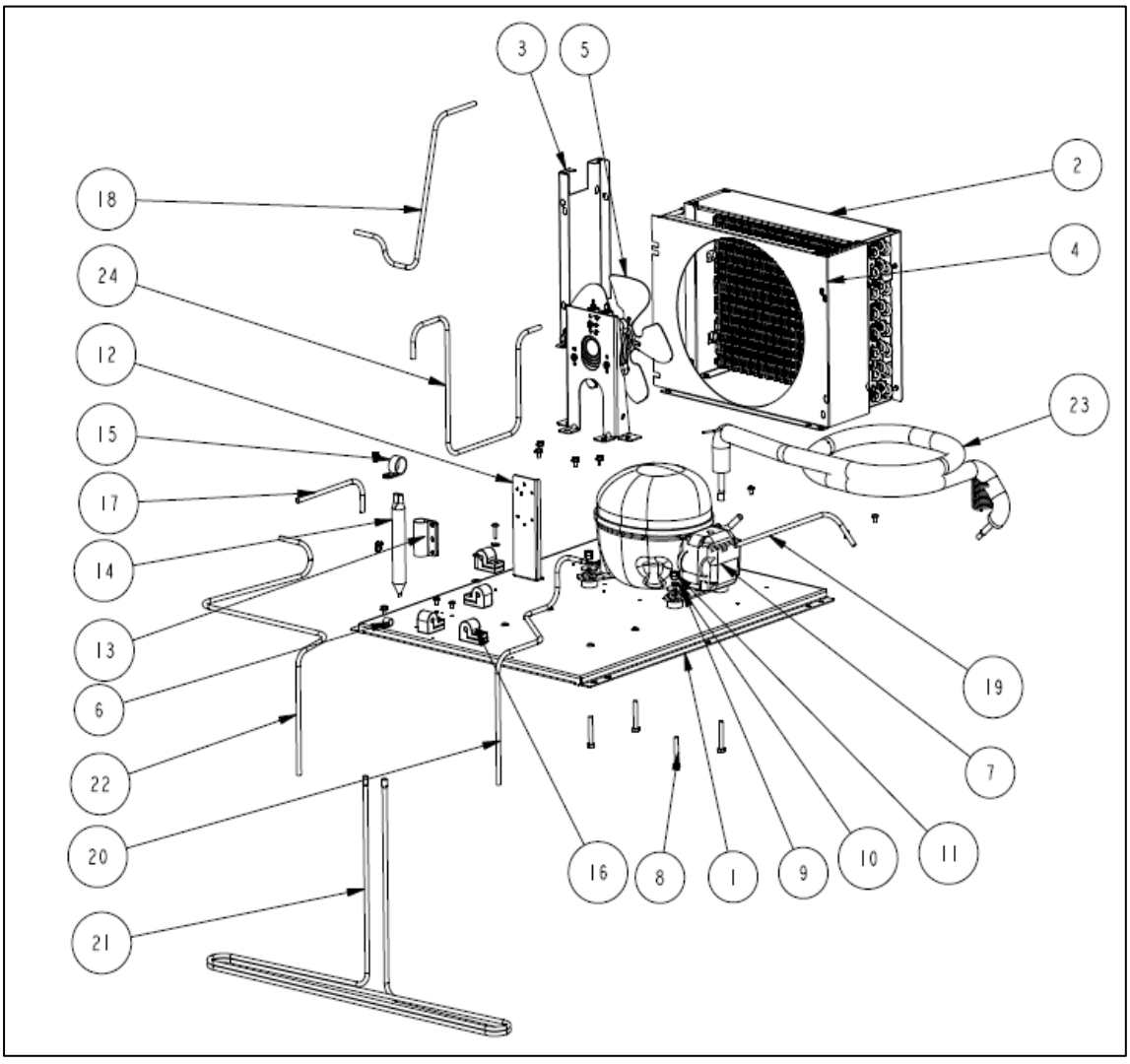

Distributed by KW Commercial Kitchen | 1300 001 366
www.kwcommercial.com.au | sales@kwcommercial.com.au

HRWE127LS4 & HRWE147LS-SERIES

INDEX NO.	SAP CODE	DRAWING NO	PART/ ASSEMBLY	DESCRIPTION	UOM	HRWE127LS4 SERIES	HRWE147LS4 SERIES
1	1137006	0712971	PART	WELDED UNIT FRAME	NOS	1	1
2	1116985	0502849	PART	MS CONDENSER	NOS	1	1
3	1107217	0114185	PART	CONDENSER COVER SIDE	NOS	1	1
4	1119775	0118773	PART	CONDENSER COVER CENTER	NOS	1	1
5	**-**	**0712961**	**ASSEMBLY**	**CONDENSER MOTOR ASSEMBLY**	**NOS**	**1**	**1**
6	1504667	-	PART	CORD FIXTURE V SMALL	NOS	1	1
7	1520280	-	PART	COMPRESSOR EMBRACO EMC3145U R290	NOS	1	1
8	1506255	-	PART	HEX SUS BOLT M6X40	NOS	4	4
9	1502212	-	PART	WASHER FOR COMPRESSOR	NOS	4	4
10	1502199	-	PART	SPRING WASHER M6	NOS	4	4
11	1502092	-	PART	NUT M6	NOS	8	8
12	1105942	0113675	PART	DRIER STAND	NOS	1	1
13	1518963	0113981	PART	DRIER FIXING CLAMP(BIG)	NOS	1	1
14	1500277	0400098	PART	DRIER 15GM DIA19 L=150	NOS	1	1
15	1505109	-	PART	CORD FIXTURE ADJUSTABLE V SIZE -1 INCH	NOS	1	1
16	1506586	0200997	PART	RUBBER VIBRATION PAD SILICON	NOS	4	4
17	-	0401626	PART	CHARGING PIPE DRIER	NOS	1	1
18	-	0401851	PART	COND INLET PIPE	NOS	1	-
	-	0401853	PART	COND INLET PIPE	NOS	-	1
19	-	0401625	PART	COMPRESSOR CHARGING PIPE	NOS	1	1
20	-	0401850	PART	DISCHARGE PIPE EXTENSION	NOS	1	1
21	-	0401833	PART	DISCHARGE PIPE WITH HEAT SHRINK DRAIN PAN	NOS	1	1
22	-	0401849	PART	DISCHARGE PIPE DRAIN PAN TO HEAT LOOP	NOS	1	-
	-	0401852	PART	DISCHARGE PIPE DRAIN PAN TO HEAT LOOP	NOS	-	1
23	1137056	0401884	PART	SUCTION PIPE WITH CAPILLARY	NOS	1	1
24	-	0401627	PART	INLET PIPE DRIER	NOS	1	1
25	1123504	0601475	PART	COMPRESSOR HARNESS	NOS	1	1

KW COMMERCIAL KITCHEN
Distributed by KW Commercial Kitchen | 1300 001 366
www.kwcommercial.com.au | sales@kwcommercial.com.au

8. DRAIN PAN FAN DUCT ASSEMBLY:

(DRAWING NO. 0712829)

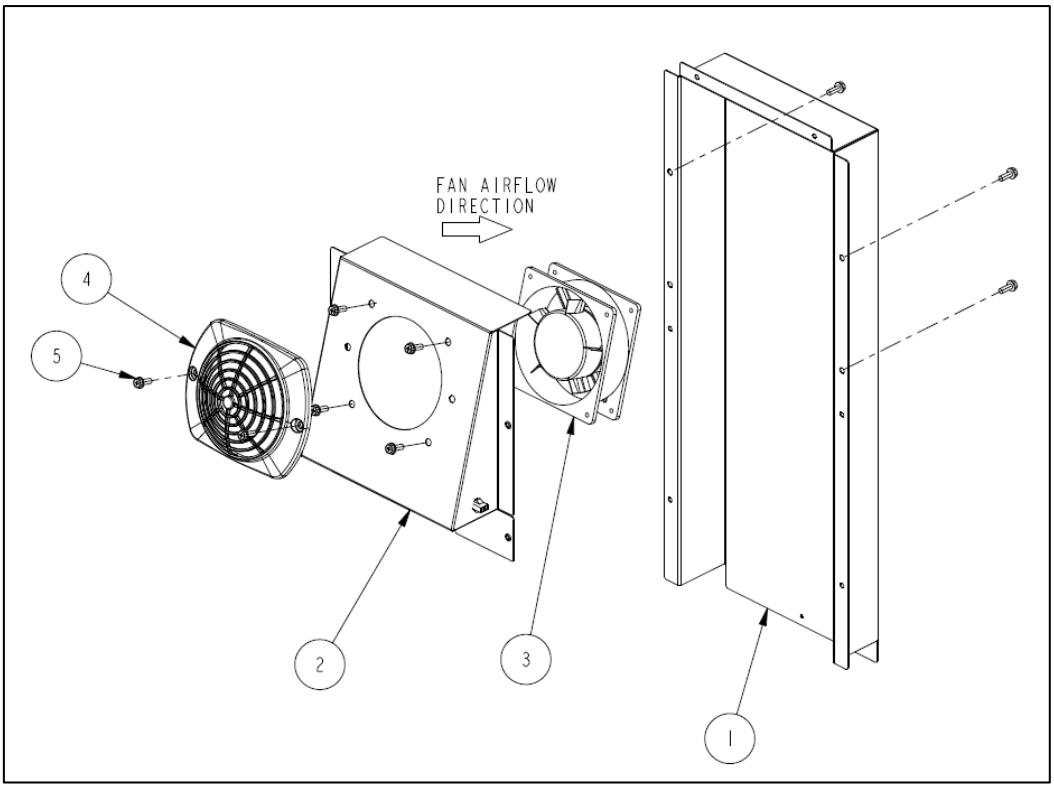

INDEX NO.	SAP CODE	DRAWING NO	PART/ASSEMBLY	DESCRIPTION	UOM	HRWE127LS4 SERIES	HRWE147LS4 SERIES
1	1135558	0122172	PART	FAN DUCT	NOS	1	1
2	1135556	0122160	PART	FAN MOUNTING	NOS	1	1
3	1523138	-	PART	ICF MOTOR 5.5W	NOS	1	1
4	1510812	0201363	PART	FAN GUARD PCABS ICF GREY	NOS	1	1
5	1509560	-	PART	SCREW TAPTITE M5X14 MS	NOS	10	10

KW COMMERCIAL KITCHEN
Distributed by KW Commercial Kitchen | 1300 001 366
www.kwcommercial.com.au | sales@kwcommercial.com.au

9. CONDENSER FAN MOTOR ASSEMBLY:

(DRAWING NO. 0712961)

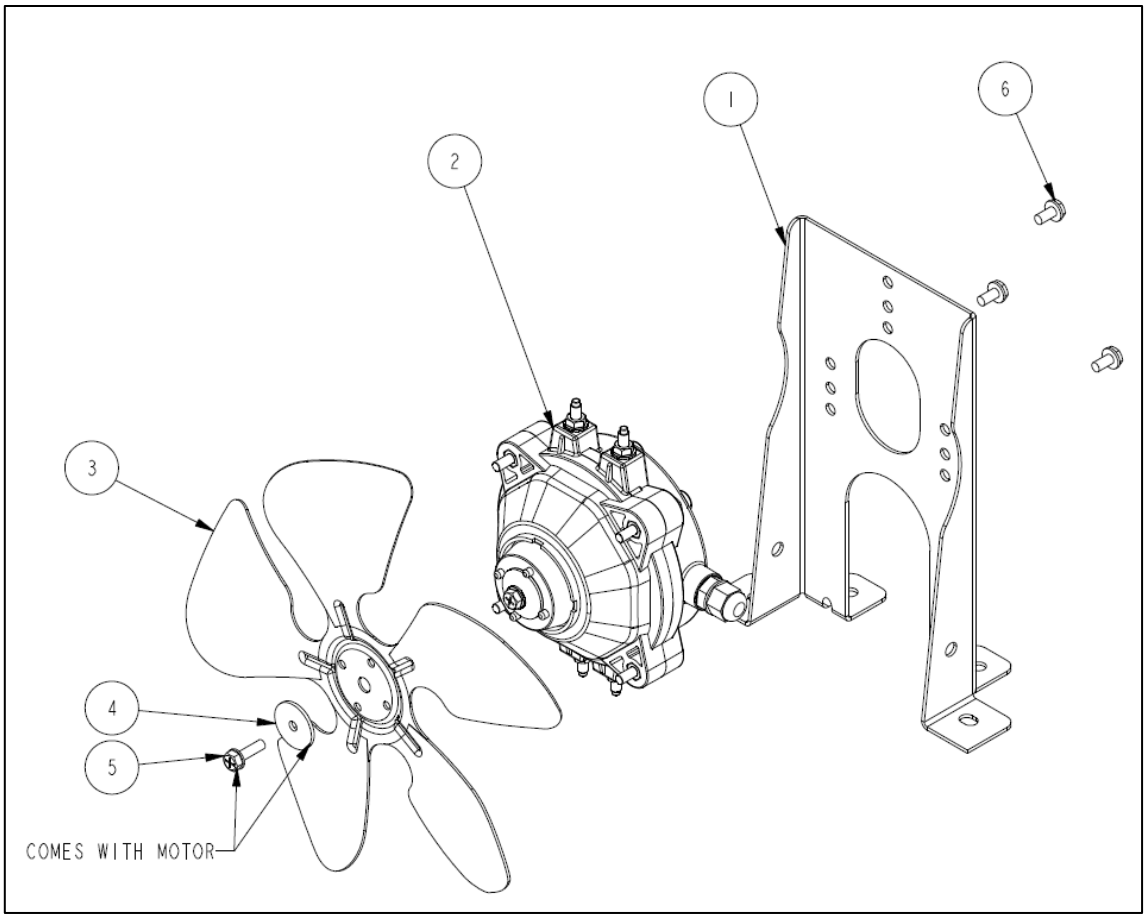

INDEX NO.	SAP CODE	DRAWING NO	PART/ ASSEMBLY	DESCRIPTION	UOM	HRWE127LS4 SERIES	HRWE147LS4 SERIES
1	1110086	0115146	PART	CONDENSOR MOTOR BRACKET	NOS	1	1
2	1525005	-	PART	EC MOTOR SAIWEI NEC4810_18W_8+9INCH	NOS	1	1
3	1114886	-	PART	IMPELLER -WRL 5 X 9" V 28 DEG	NOS	1	1
4	-	-	PART	WASHER FOR MOTOR(COMES WITH MOTOR)	NOS	1	1
5	-	-	PART	MOTOR SCREW(COMES WITH MOTOR)	NOS	1	1
6	1512981	-	PART	SCREW STAR HEX HEAD M4X8 (T2) SUS	NOS	3	3

KW COMMERCIAL KITCHEN
Distributed by KW Commercial Kitchen | 1300 001 366
www.kwcommercial.com.au | sales@kwcommercial.com.au

10. POWER BOX ASSEMBLY

(DRAWING NO. 0712974)

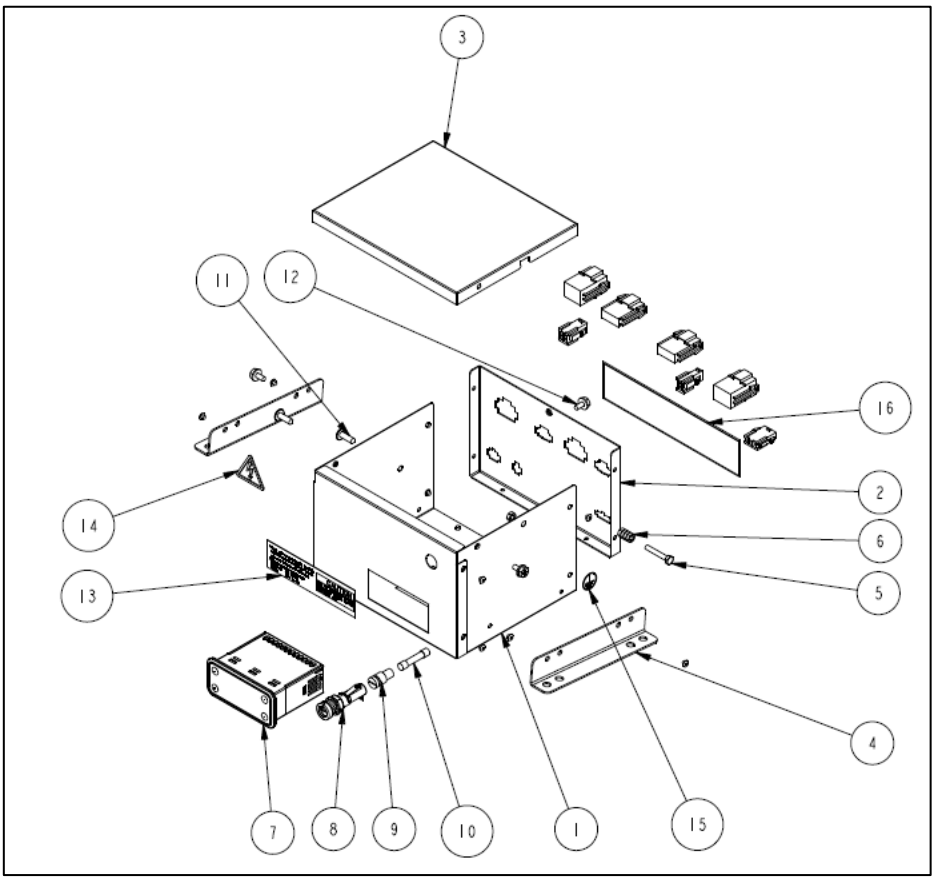

INDEX NO.	SAP CODE	DRAWING NO	PART/ASSEMBLY	DESCRIPTION	UOM	HRWE127LS4 SERIES	HRWE147LS4 SERIES
1	1131729	0121639	PART	POWER BOX BASE	NOS	1	1
2	1136529	0122295	PART	BACK PLATE	NOS	1	1
3	1107293	0116037	PART	CONTROL BOX COVER	NOS	1	1
4	1107867	0114475	PART	LEG CONTROL BOX	NOS	2	2
5	1502067	-	PART	BOLT EARTHING M4X25-BRASS	NOS	1	1
6	1502088	-	PART	NUT M4 EARTHING - BRASS	NOS	5	5
7	1515957	-	PART	ELECT CONTROLLER XR06CH-5N5C5-B_DIXELL	NOS	1	1
8	1510504	-	PART	FUSE SOCKET,0031.1693.SI,IP40_UC	NOS	1	1
9	1510505	-	PART	FUSE CARRIER,0031.1666.SI,IP40_UC	NOS	1	1
10	1510503	-	PART	FUSE 10A,8020.5021.G.SI _UC	NOS	1	1
11	1502192	-	PART	SCREW T5 X 15 (T4) MZN	NOS	2	2
12	1508312	-	PART	SCREW TAPTITE M4X8	NOS	3	3
13	NEW CODE	0507341	PART	TEMPERATURE LABEL	NOS	1	1
14	1510405	0502436	PART	CAUTION STICKER HIGH VOLTAGE	NOS	1	1
15	1510404	0502251	PART	CAUTION STICKER EARTHING	NOS	1	1
16	1604767	0507385	PART	CONNECTOR LABEL	NOS	1	1
17	1136465	0601873	PART	POWER BOX HARNESS	NOS	1	1
18	1119468	0601231	PART	SENSOR CONNECTING HARNESS DIXELL	NOS	1	1

KW COMMERCIAL KITCHEN
Distributed by KW Commercial Kitchen | 1300 001 366
www.kwcommercial.com.au | sales@kwcommercial.com.au

11. CENTER PILLAR ASSEMBLY HALF DOOR

(DRAWING NO. 0702511 & 0701474)

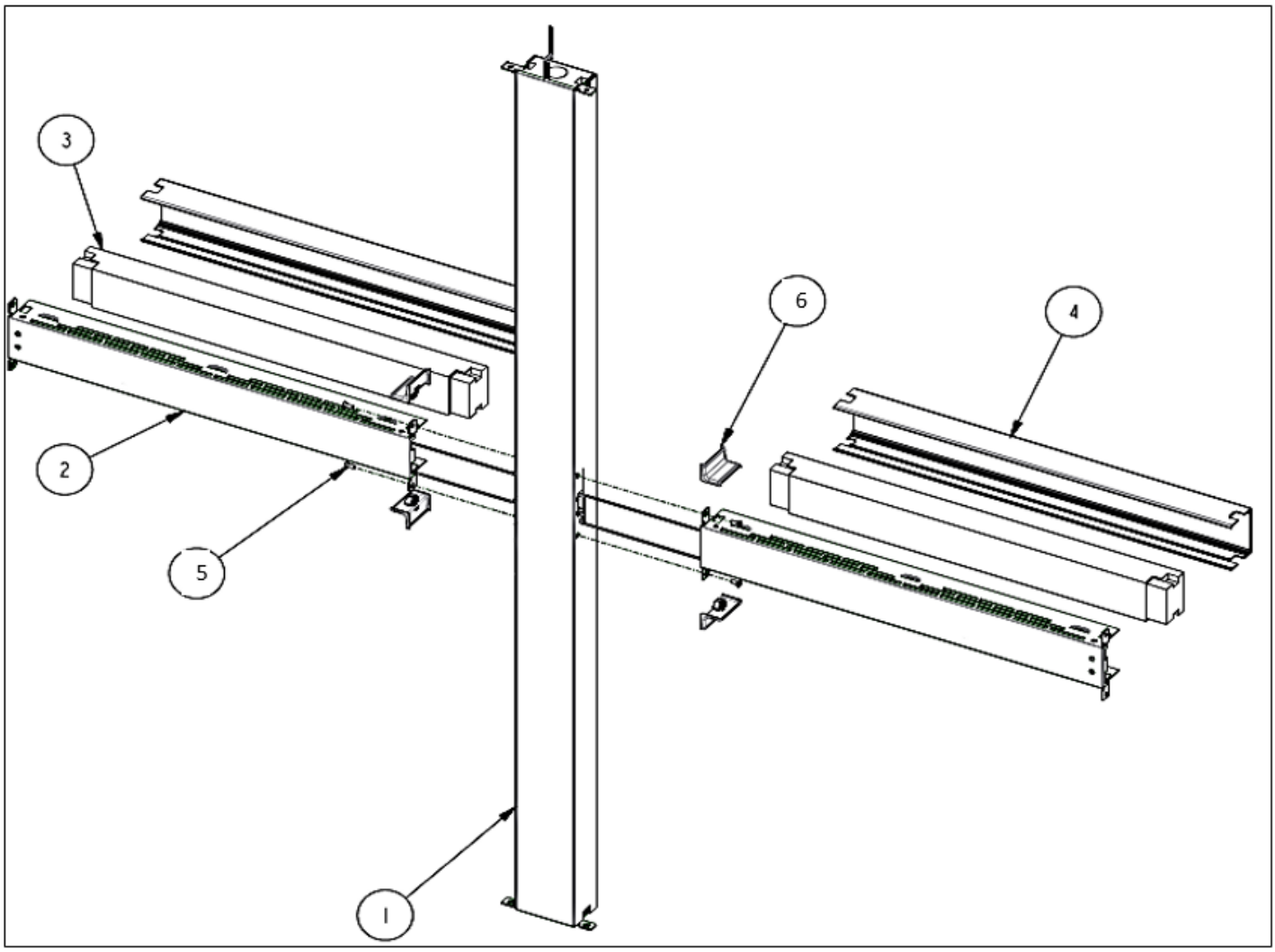

INDEX NO.	SAP CODE	DRAWING NO	PART/ ASSEMBLY	DESCRIPTION	UOM	HRWE127LS4	HRWE147LS4
1	1113714	0702509	PART	FOAMED VERTICAL CENTER PILLER	NOS	1	-
	1107866	0702509	PART	FOAMED VERTICAL CENTER PILLER	NOS	-	1
2	1137076	0702510	PART	HORIZONTAL FRAME 127	NOS	2	-
	1137075	0701521	PART	HORIZONTAL FRAME 147	NOS	-	2
3	1602074	0505679	PART	EPS CENTER PILLER 127	NOS	2	-
	1601163	0502913	PART	EPS CENTER PILLER 147	NOS	-	2
4	1122644	0201100	PART	HORIZONTAL FRAME PLASTIC EXTRUSION	NOS	-	1
	1122643	0201561	PART	HORIZONTAL FRAME PLASTIC EXTRUSION	NOS	1	-
5	1503637	-	PART	SCREW M5 X 12 CSK	NOS	4	4
6	1507657	0245637	PART	SUS INSIDE CORNER - 245637-02	NOS	4	4

KW COMMERCIAL KITCHEN
Distributed by KW Commercial Kitchen | 1300 001 366
www.kwcommercial.com.au | sales@kwcommercial.com.au

HRWE127LS4 & HRWE147LS-SERIES
DOOR ASSEMBLY RT HALF DOOR BOTTOM

(DRAWING NO. 0703651 & 0703652)

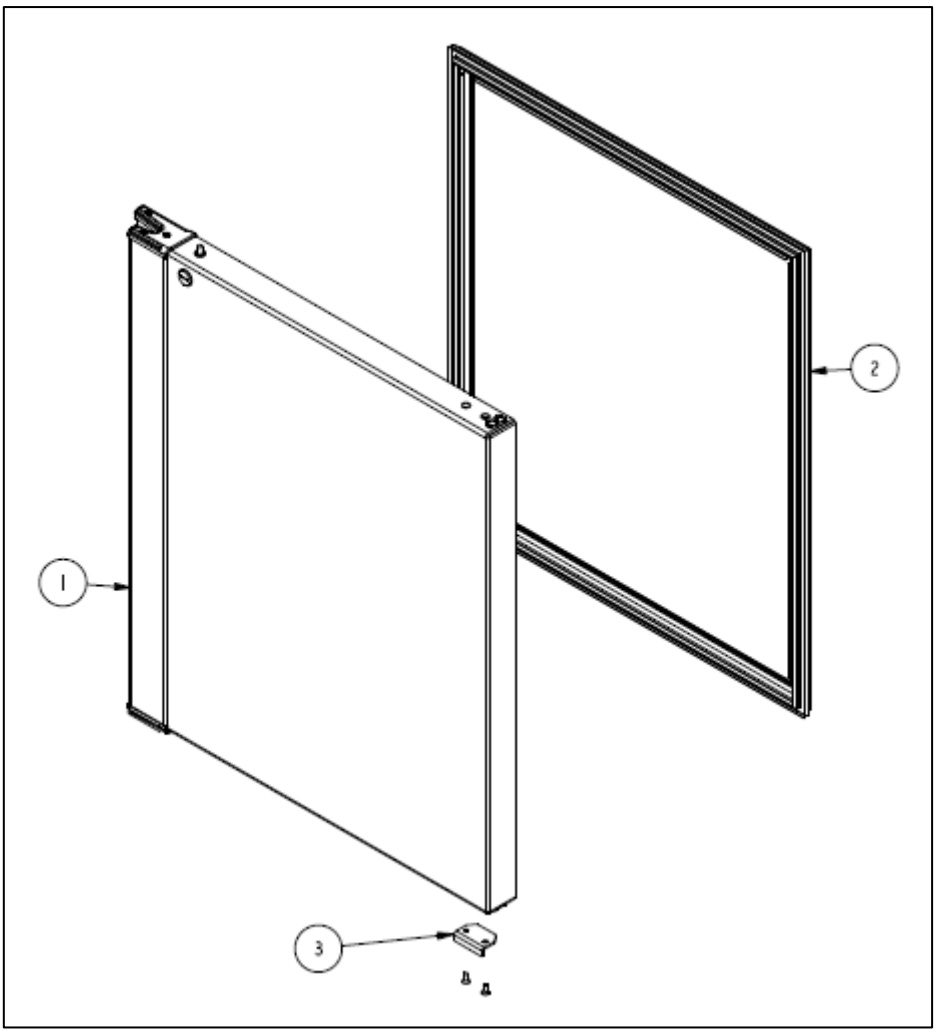

INDEX NO.	SAP CODE	DRAWING NO	PART/ ASSEMBLY	DESCRIPTION	UOM	HRWE127LS4	HRWE147LS4
1	1116040	0703416	PART	FOAM DOOR RT	NOS	1	-
	1116032	0703417	PART	FOAM DOOR RT	NOS	-	1
2	1514302	0201562	PART	DOOR GASKET	NOS	1	-
	1514301	0201139	PART	DOOR GASKET	NOS	-	1
3	1514112	0117246	PART	DOOR STOPPER TYPE 2	NOS	1	1

KW COMMERCIAL KITCHEN
Distributed by KW Commercial Kitchen | 1300 001 366
www.kwcommercial.com.au | sales@kwcommercial.com.au

12. DOOR ASSEMBLY LT HALF DOOR BOTTOM

(DRAWING NO. 0703651 & 0703652)

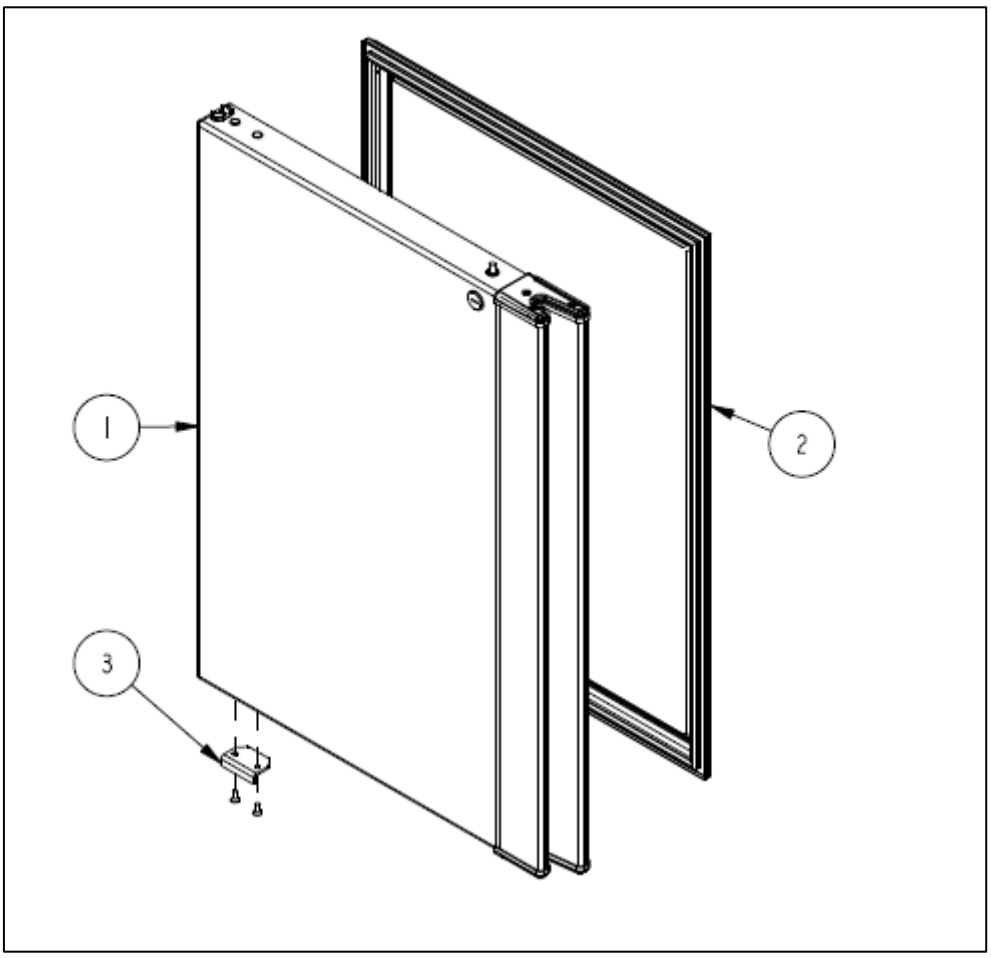

INDEX NO.	SAP CODE	DRAWING NO	PART/ ASSEMBLY	DESCRIPTION	UOM	HRWE127LS4	HRWE147LS4
1	1116041	0703416	PART	FOAM DOOR LT	NOS	1	-
	1116038	0703417	PART	FOAM DOOR LT	NOS	-	1
2	1514302	0201562	PART	DOOR GASKET	NOS	1	-
	1514301	0201139	PART	DOOR GASKET	NOS	-	1
3	1514112	0117246	PART	DOOR STOPPER TYPE 2	NOS	1	1

KW COMMERCIAL KITCHEN
Distributed by KW Commercial Kitchen | 1300 001 366
www.kwcommercial.com.au | sales@kwcommercial.com.au

13. DOOR ASSEMBLY RT HALF DOOR TOP

(DRAWING NO. 0703651 & 0703652)

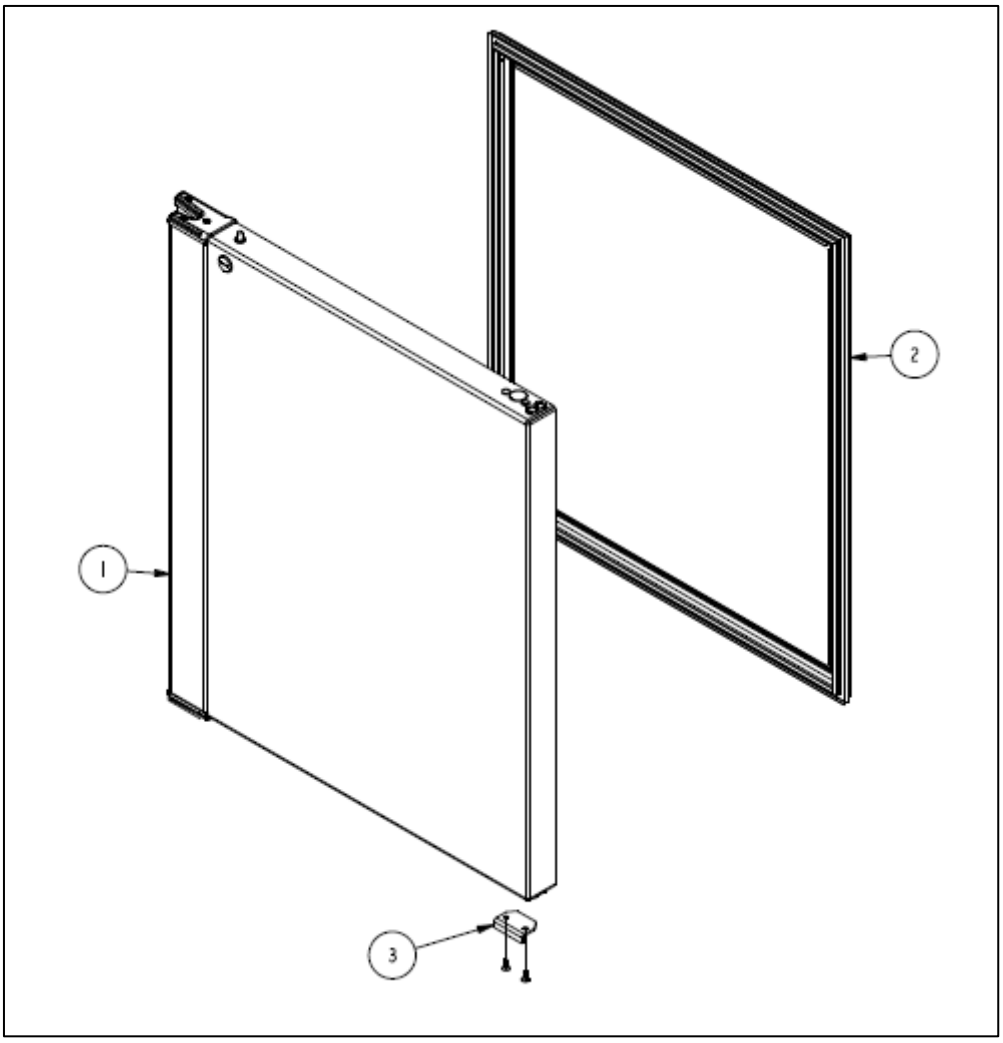

INDEX NO.	SAP CODE	DRAWING NO	PART/ ASSEMBLY	DESCRIPTION	UOM	HRWE127LS4	HRWE147LS4
1	1116045	0703416	PART	FOAMED DOOR RT WLM	NOS	1	-
	1116034	0703417	PART	FOAMED DOOR RT WLM	NOS	-	1
2	1514302	0201562	PART	DOOR GASKET	NOS	1	-
	1514301	0201139	PART	DOOR GASKET	NOS	-	1
3	1514112	0117246	PART	DOOR STOPPER TYPE 2	NOS	1	1

KW COMMERCIAL KITCHEN
Distributed by KW Commercial Kitchen | 1300 001 366
www.kwcommercial.com.au | sales@kwcommercial.com.au

14. DOOR ASSEMBLY LT HALF DOOR TOP

(DRAWING NO. 0703651 & 0703652)

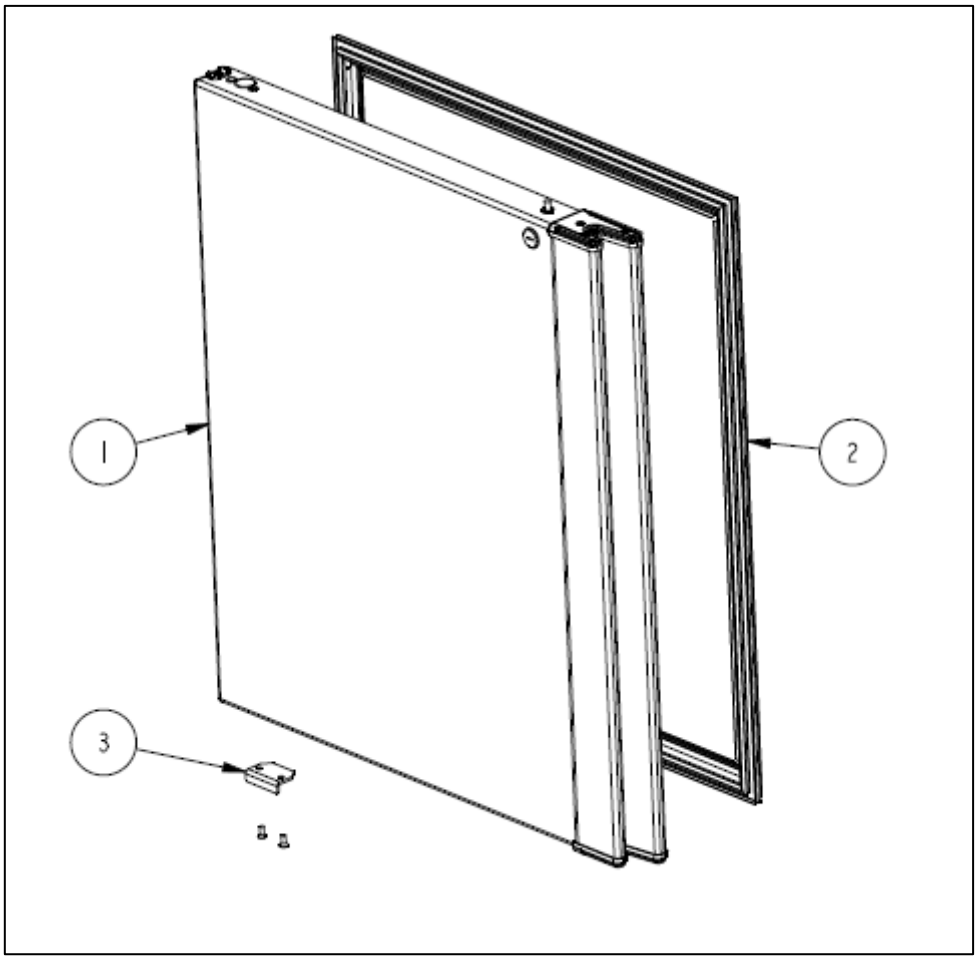

INDEX NO.	SAP CODE	DRAWING NO	PART/ ASSEMBLY	DESCRIPTION	UOM	HRWE127LS4	HRWE147LS4
1	1116046	0703416	PART	FOAMED DOOR RT WLM	NOS	1	-
	1116036	0703417	PART	FOAMED DOOR RT WLM		-	1
2	1514302	0201562	PART	DOOR GASKET	NOS	1	-
	1514301	0201139	PART	DOOR GASKET		-	1
3	1514112	0117246	PART	DOOR STOPPER TYPE 2	NOS	1	1

KW COMMERCIAL KITCHEN
Distributed by KW Commercial Kitchen | 1300 001 366
www.kwcommercial.com.au | sales@kwcommercial.com.au

15. DOOR ASSEMBLY RT LONG DOOR

(DRAWING NO. 0710125)

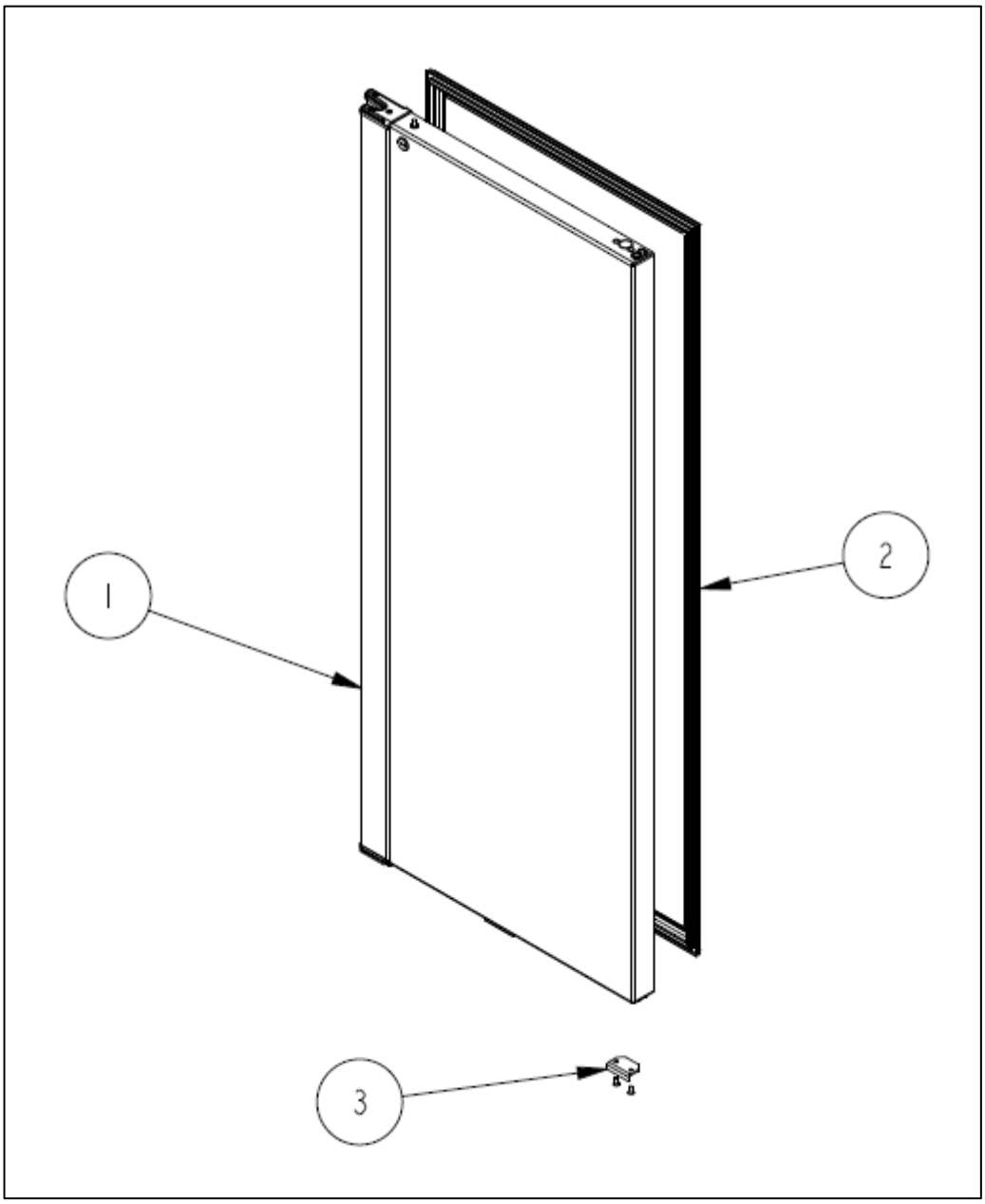

INDEX NO.	SAP CODE	DRAWING NO	PART/ ASSEMBLY	DESCRIPTION	UOM	HRWE147LS4-LDGN
1	1115998	0703415	PART	FOAMED DOOR WL RT	NOS	1
2	1514304	0201656	PART	DOOR GASKET	NOS	1
3	1514112	0117246	PART	NEW DOOR STOPPER	NOS	1

KW COMMERCIAL KITCHEN
Distributed by KW Commercial Kitchen | 1300 001 366
www.kwcommercial.com.au | sales@kwcommercial.com.au

16. DOOR ASSEMBLY LT LONG DOOR

(DRAWING NO. 0710125)

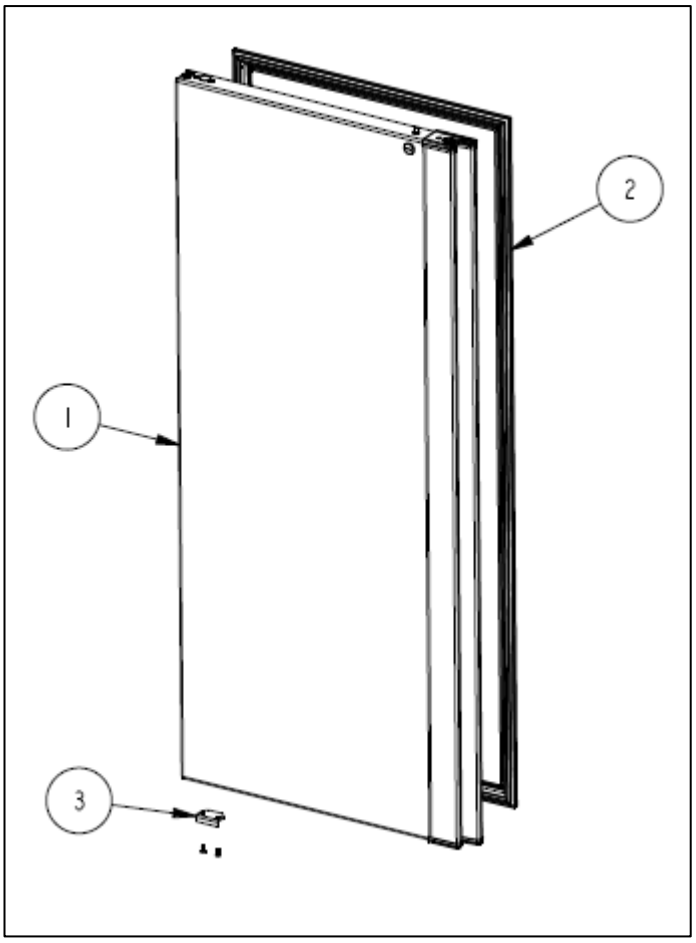

INDEX NO.	SAP CODE	DRAWING NO	PART/ ASSEMBLY	DESCRIPTION	UOM	HRWE147LS4-LDGN
1	1116002	0703415	PART	FOAMED DOOR WL LT	NOS	1
2	1514304	0201656	PART	DOOR GASKET	NOS	1
3	1514112	0117246	PART	NEW DOOR STOPPER	NOS	1

KW COMMERCIAL KITCHEN
Distributed by KW Commercial Kitchen | 1300 001 366
www.kwcommercial.com.au | sales@kwcommercial.com.au

17. DOOR ASSEMBLY RT LONG GLASS

(DRAWING NO. 0704198)

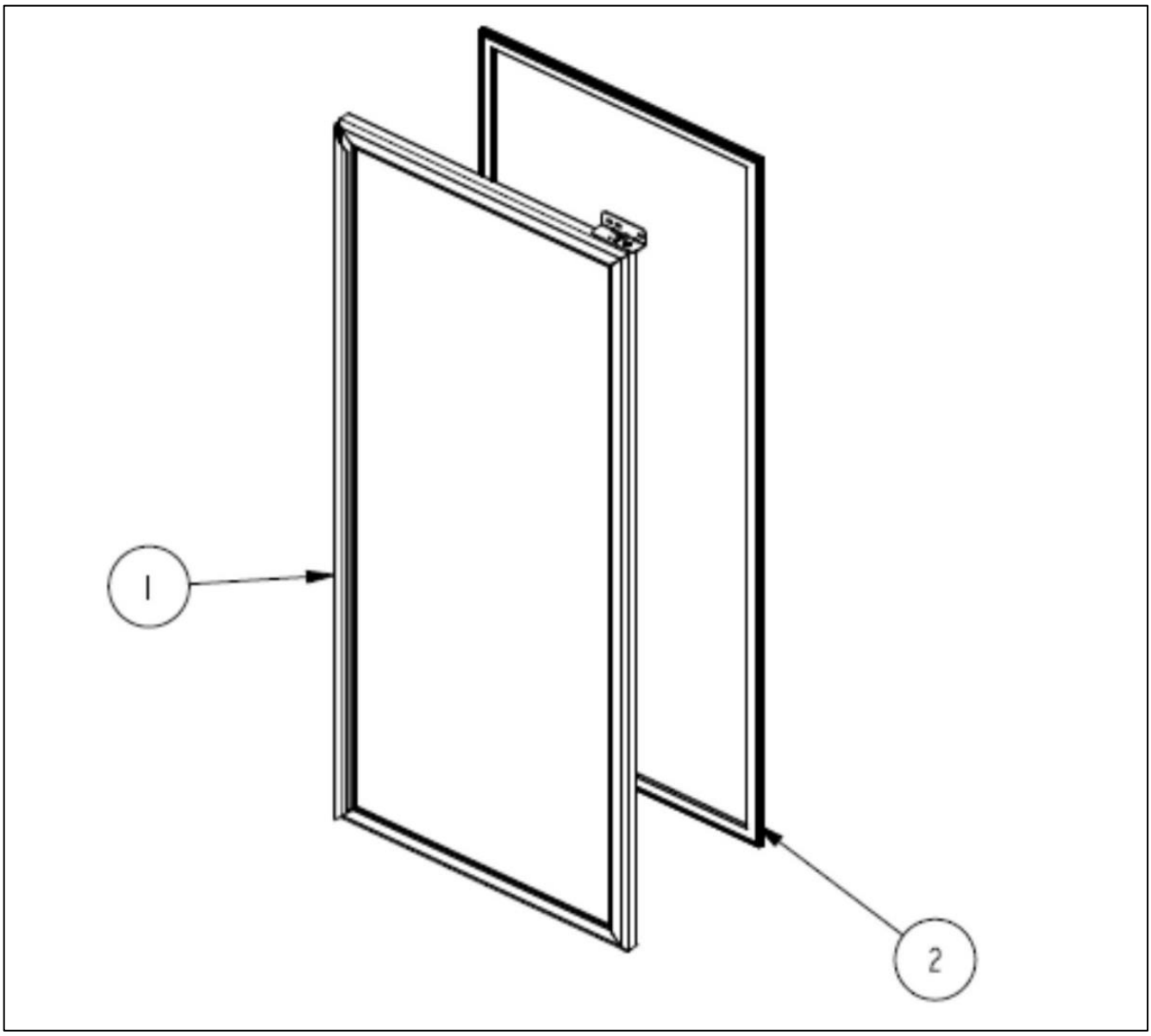

INDEX NO.	SAP CODE	DRAWING NO	PART/ ASSEMBLY	DESCRIPTION	UOM	HRWE12LS4-LG
1	-	0704198	PART	GLASS DOOR RT	NOS	1
2	0201897	1516316	PART	GLASS DOOR GAASKET	NOS	1

KW COMMERCIAL KITCHEN
Distributed by KW Commercial Kitchen | 1300 001 366
www.kwcommercial.com.au | sales@kwcommercial.com.au

18. DOOR ASSEMBLY LT LONG GLASS

(DRAWING NO. 0704198)

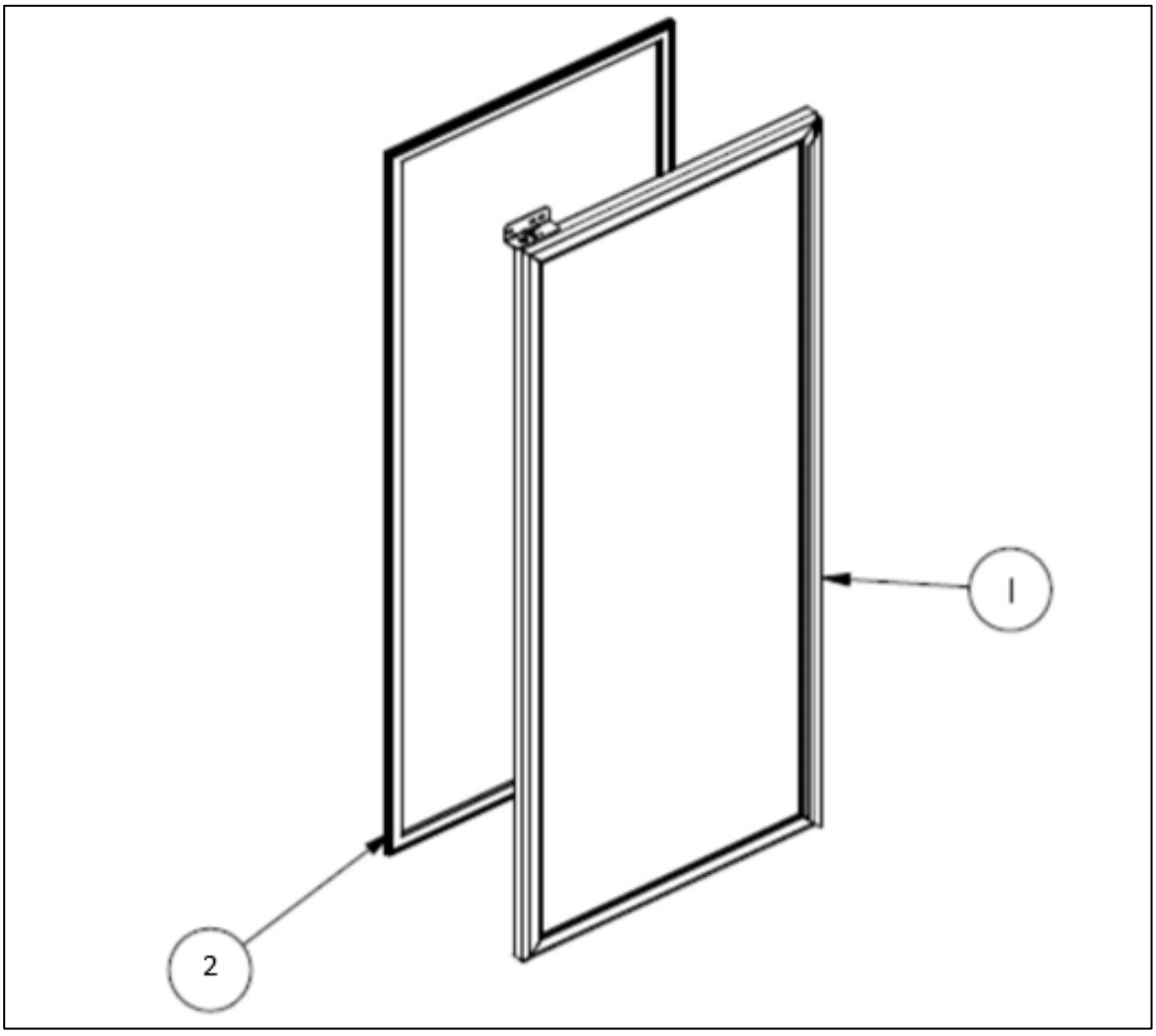

INDEX NO.	SAP CODE	DRAWING NO	PART/ ASSEMBLY	DESCRIPTION	UOM	HRWE12LS4-LG
1	-	0704198	PART	DOOR FRAME LT	NOS	1
2	0201897	1516316	PART	GLASS DOOR GASKET	NOS	1

KW COMMERCIAL KITCHEN
Distributed by KW Commercial Kitchen | 1300 001 366
www.kwcommercial.com.au | sales@kwcommercial.com.au

19. CANOPY ASSEMBLY

(DRAWING NO. 0702503 & 0712973 & 0702500)

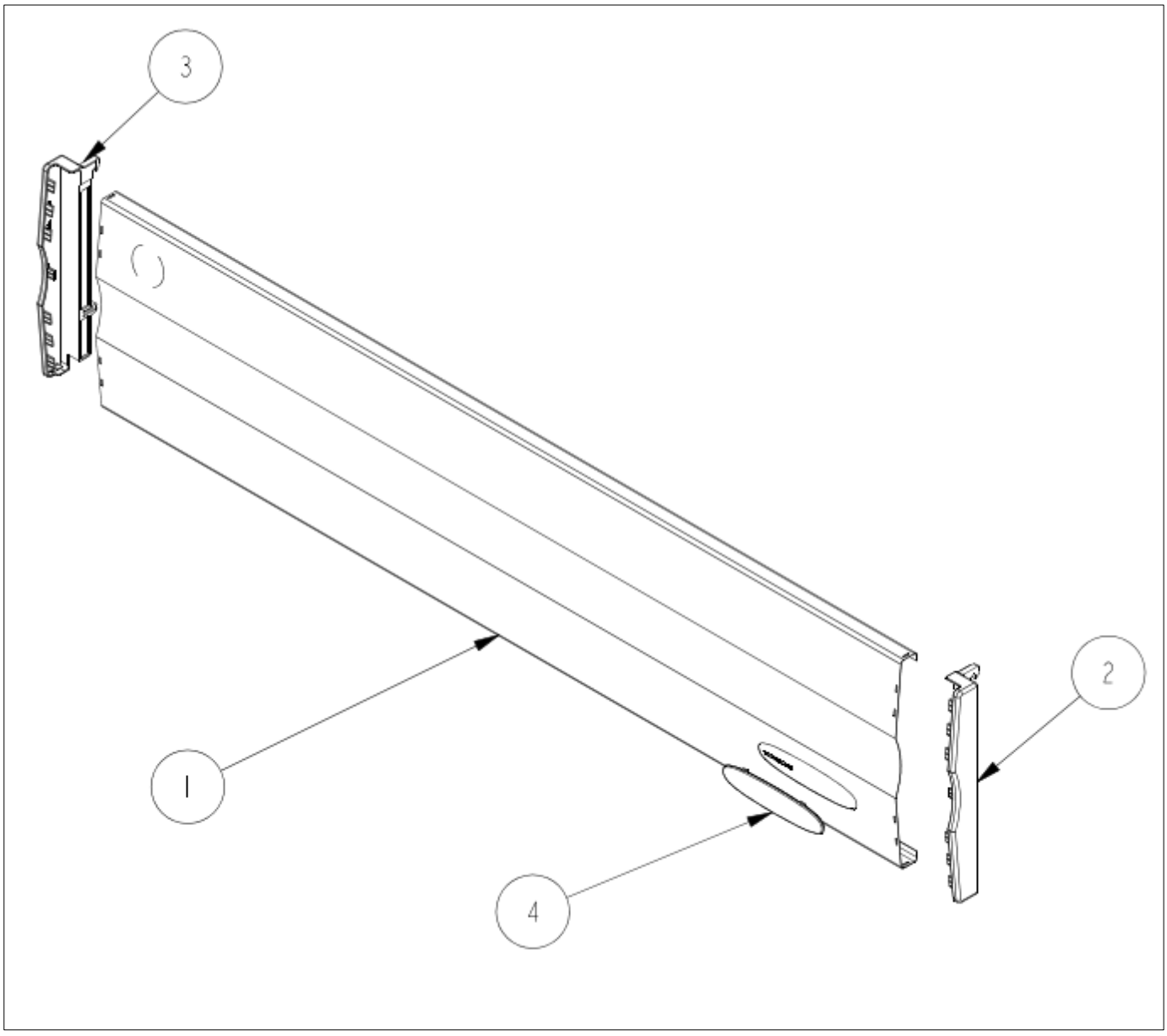

INDEX NO.	SAP CODE	DRAWING NO	PART/ ASSEMBLY	DESCRIPTION	UOM	HRWE127LS4	HRWE127LS4-LG	HRWE147LS4-SERIES
1	1113358	0119493	PART	FRONT CANOPY PANEL	NOS	1	-	-
	1136999	0122297	PART	FRONT CANOPY PANEL	NOS	-	1	-
	1107303	0119494	PART	FRONT CANOPY PANEL	NOS	-	-	1
2	1517042	0202001	PART	PLASTIC CORNER – FRONT PANEL (R)	NOS	1	1	1
3	1517043	0202002	PART	PLASTIC CORNER – FRONT PANEL (L)	NOS	1	1	1
4	1508081	0201743	PART	WINDOW PANEL	NOS	1	1	1

KW COMMERCIAL KITCHEN
Distributed by KW Commercial Kitchen | 1300 001 366
www.kwcommercial.com.au | sales@kwcommercial.com.au

20. OPTIONAL PARTS (Replace Castor by)

INDEX NO.	SAP CODE	DRAWING NO	PART/ ASSEMBLY	DESCRIPTION	UOM	HRWE77LS Series
1	1515007	-	PART	LEG 90 MM	NOS	4
	1508307	-	PART	LEG 150 MM	NOS	4

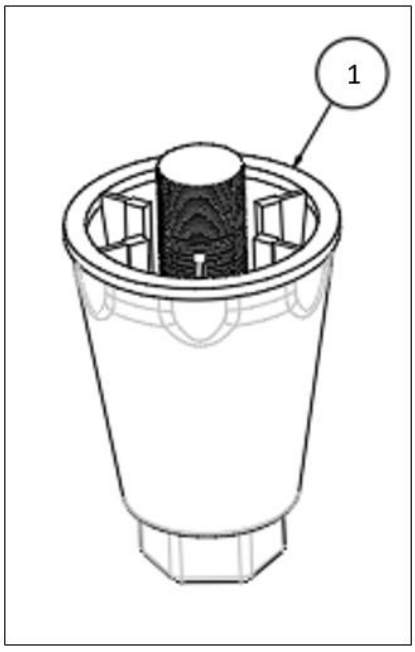

LEG (90 MM /150MM) POSITION

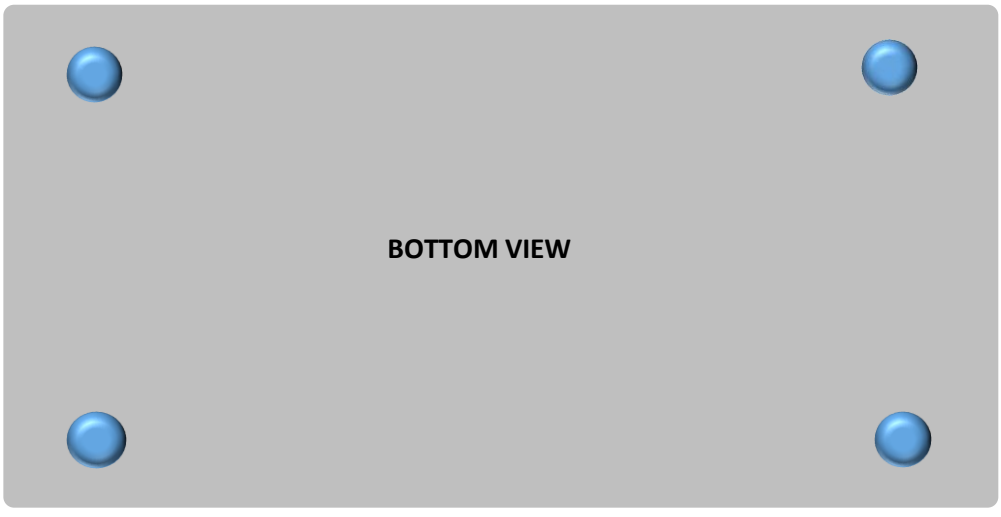

FRONT SIDE

Distributed by KW Commercial Kitchen | 1300 001 366
www.kwcommercial.com.au | sales@kwcommercial.com.au

21. REVISION DETAILS:

REVISION	REVISION DETAIL	DATE