PRODUCT DOCUMENT PACK

Prepared and distributed by KW Commercial Kitchen

PRODUCT

Hoshizaki 97000193 HR-77-GN 628L Gastronorm Fridge 1 Door

Model / SKU: 97000193

KW COMMERCIAL KITCHEN

7/72 Canterbury Road, Bankstown NSW 2200

Phone 1300 001 366

Email sales@kwcommercial.com.au

Web www.kwcommercial.com.au

Scan for the current KW product page

DOCUMENT NOTICE

The supplier document begins on the next page. KW contact branding is added in a separate footer area and does not replace the supplier's instructions, specifications or warranty terms.

Official supplier source: /media/products/82212/documents/other-3.pdf

DATE	26.07.2024
REV NO	A
DOC NO	WRL/RI/E/01

REACH-IN REFRIGERATOR / FREEZER

MODELS: HRWE77- SERIES

Table of Contents

1. PRODUCT NOMENCLATURE 3
2. REFRIGERATOR ASSEMBLY (HRWE77LS4) 4
3. REFRIGERATOR ASSEMBLY (HRWE77LS4-LG) 6
4. REFRIGERATOR ASSEMBLY (HRWE77LS4-LDGN) 8
5. EVAPORATOR ASSEMBLY 10
6. EVAPORATOR MOTOR ASSEMBLY 11
7. CONDENSING UNIT ASSEMBLY 12
8. DRAIN PAN FAN DUCT ASSEMBLY: 14
9. CONDENSER FAN MOTOR ASSEMBLY: 15
10. POWER BOX ASSEMBLY 16
11. DOOR ASSEMBLY HALF DOOR BOTTOM 17
12. DOOR ASSEMBLY HALF DOOR TOP 18
13. DOOR ASSEMBLY LONG DOOR 19
14. DOOR ASSEMBLY LONG GLASS 20
15. CANOPY ASSEMBLY 21
16. OPTIONAL PARTS (Replace Castor by) 22
17. REVISION DETAILS: 23

KW COMMERCIAL KITCHEN
Distributed by KW Commercial Kitchen | 1300 001 366
www.kwcommercial.com.au | sales@kwcommercial.com.au

1. PRODUCT NOMENCLATURE

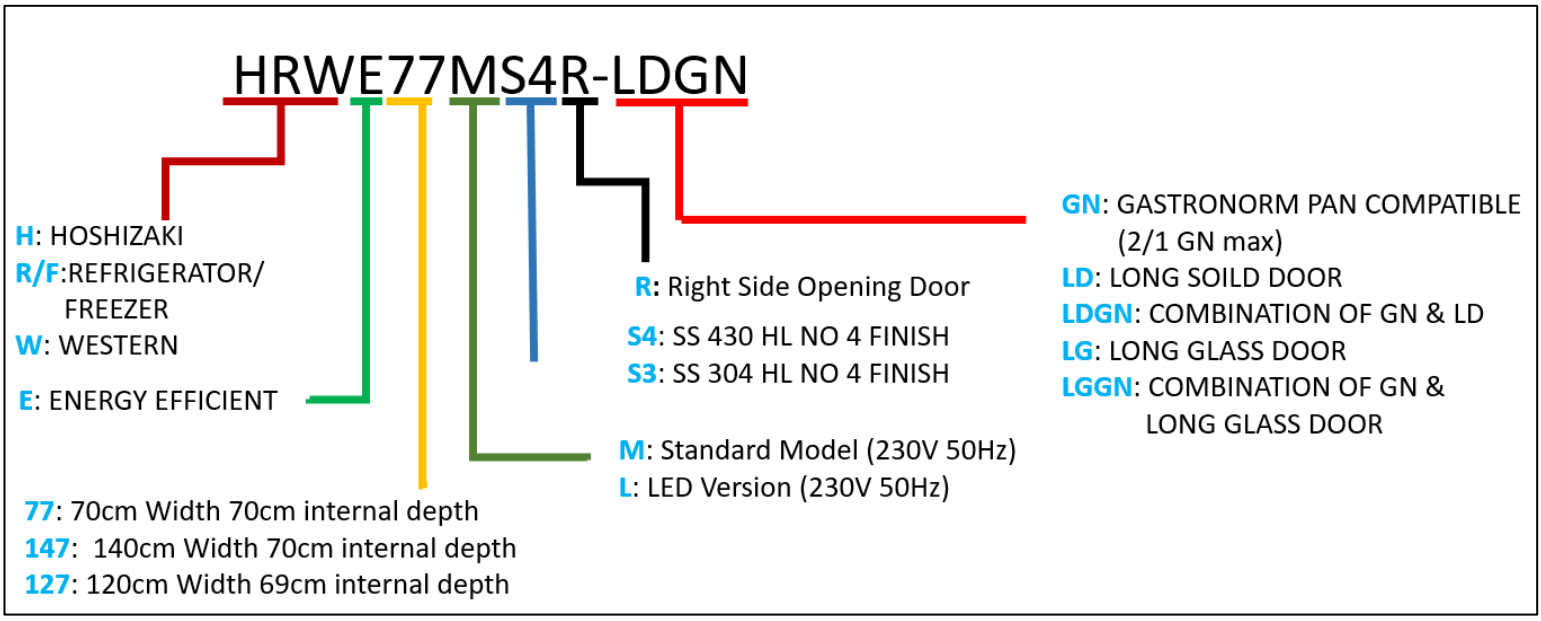

2. REFRIGERATOR ASSEMBLY (HRWE77LS4)

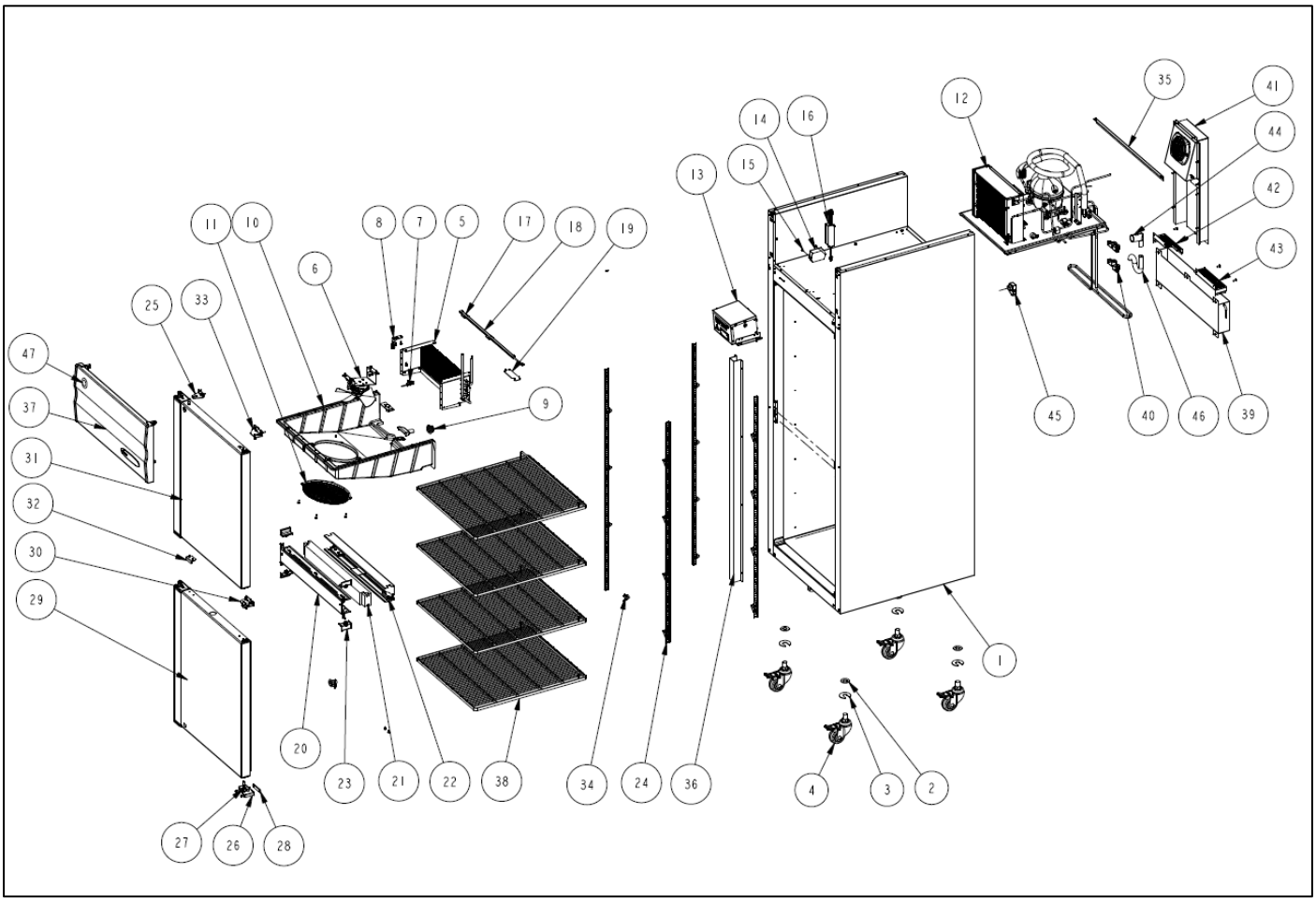

HRWE77LS4-SERIES

INDEX NO.	SAP CODE	DRAWING NO	PART/ASSEMBLY	DESCRIPTION	UOM	HRWE77LS4
1	1136467	0712956	PART	CABINET	NOS	1
2	1512662	-	PART	PLAIN WASHER	NOS	4
3	1512663	-	PART	CASTOR SPACER	NOS	4
4	1512660	0506266	PART	CASTOR WHEEL	NOS	4
5	**1131545**	**0711495**	**ASSEMBLY**	**EVAPORATOR ASSEMBLY**	**NOS**	**1**
6	**-**	**0712904**	**ASSEMBLY**	**EVAPORATOR MOTOR ASSEMBLY**	**NOS**	**1**
7	1508122	0201135	PART	SENSOR CLIP COIL	NOS	1
8	1514594	0202684	PART	SENSOR HOLDING CLAMP	NOS	1
9	1510163	0201310	PART	DRAIN GASKET	NOS	1
10	1524171	0201886	PART	DEW COLLECTOR	NOS	1
11	1523567	0201269	PART	EVAP FAN GUARD	NOS	1
12	**1136468**	**0712828**	**ASSEMBLY**	**CONDENSING UNIT ASSEMBLY**	**NOS**	**1**
13	**1136469**	**0712974**	**ASSEMBLY**	**POWER BOX ASSEMBLY**	**NOS**	**1**
14	1111854	0600807	PART	EMI FILTER 6A	NOS	1
15	1502183	-	PART	SCREW T4 X 12 (T4) SUS	NOS	2
16	1133371	0602595	PART	LED DRIVER 20W 24VDC	NOS	1
17	1525166	0203416	PART	LED BRACKET TOP	NOS	2
18	1525322	0602660	PART	PL LED BAR C-TYPE CV 2.0W L510MM	NOS	1
19	1111141	0115768	PART	LED CONNECTOR BOX COVER LT	NOS	1
20	1137077	0701475	PART	HORIZONTAL FRAME	NOS	1
21	1601162	0502912	PART	EPS HORIZONTAL FRAME	NOS	1
22	1122645	0201099	PART	HORIZONTAL FRAME EXTRUSION	NOS	1
23	1507657	0245637	PART	SUS INSIDE CORNER	NOS	4
24	1511531	0505442	PART	SHELF HOLDER RACK	NOS	4
25	1115709	0117299	PART	DOOR LOCK BKT	NOS	1
26	1520365	0506809	PART	BOTTOM HINGE RT	NOS	1
27	1508146	0201703	PART	SUS PLASTIC HINGE COLLAR - HINGE	NOS	2
28	1508739	0201166	PART	SUS DOOR SPACER	NOS	6
29	**1115999**	**0703652**	**ASSEMBLY**	**RT DOOR ASSEMBLY HALF DOOR BOTTOM**	**NOS**	**1**
30	1508029	0502998	PART	SUS MIDDLE HINGE RT	NOS	1
31	**1115997**	**0703652**	**ASSEMBLY**	**RT DOOR ASSEMBLY HALF DOOR TOP**	**NOS**	**1**
32	1515116	0117786	PART	DOOR LOCK STOPPER BKT	NOS	1
33	1510964	0506838	PART	TOP HINGE RT	NOS	1
34	1513377	0505879	PART	SHELF CLIP	NOS	16
35	1107276	0114120	PART	CANOPY SUPPORT ANGLE	NOS	1
36	1131728	0121383	PART	STOPER CHANNEL	NOS	1
37	**1107864**	**0701479**	**ASSEMBLY**	**CANOPY ASSEMBLY**	**NOS**	**1**
38	1518192	0506505	PART	PNTD STRIP SHELF	NOS	4
39	1527039	0712826	PART	SS DRAIN PAN	NOS	1
40	1506586	0200997	PART	RUBBER VIBRATION PAD SILICON	NOS	5
41	**1137078**	**0712829**	**ASSEMBLY**	**DRAIN PAN FAN DUCT ASSEMBLY**	**NOS**	**1**
42	1135555	0122171	PART	DRAIN PAN PIPE HOLDER RT	NOS	1
43	1135554	0122204	PART	DRAIN PAN PIPE HOLDER LT	NOS	1
44	1526893	0222752	PART	DRAIN PIPE ELBOW	NOS	1
45	1519474	0506618	PART	AIR VENT VALVE	NOS	1
46	NEW CODE	0222754	PART	DRAIN PIPE OUTLET	NOS	1
47	1510783	0505553	PART	5 STAR DOME PENGUIN RT 50MM	NOS	1
48	1507711	0600574	PART	HARNESS EVAPORATOR MOTOR	NOS	1
49	1124685	0601535	PART	SENSOR HARNESS	NOS	1
50	1136343	0601857	PART	ICF EXT HARNESS	NOS	1
51	1124621	0601522	PART	DOOR SWITCH HARNESS	NOS	1
52	1527286	0507340	PART	PWR CORD COT AU/NZ TYPE-I 10A 1MM2/3M/TT	NOS	1

KW COMMERCIAL KITCHEN
Distributed by KW Commercial Kitchen | 1300 001 366
www.kwcommercial.com.au | sales@kwcommercial.com.au

3. REFRIGERATOR ASSEMBLY (HRWE77LS4-LG)

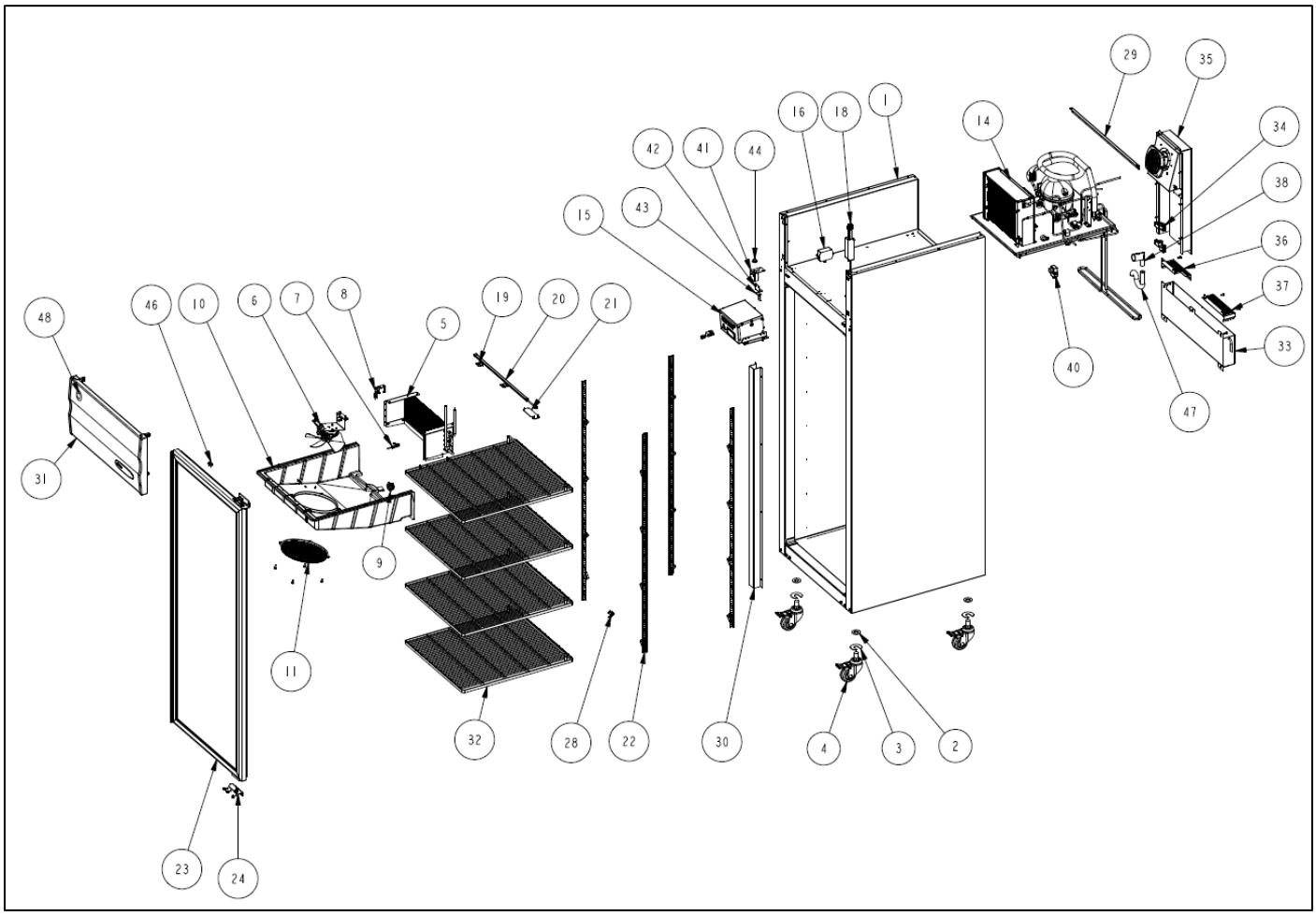

Distributed by KW Commercial Kitchen | 1300 001 366
www.kwcommercial.com.au | sales@kwcommercial.com.au

HRWE77LS4-SERIES

INDEX NO.	SAP CODE	DRAWING NO	PART/ASSEMBLY	DESCRIPTION	UOM	HRWE77LS4
1	1136478	0712953	PART	CABINET	NOS	1
2	1512662	-	PART	PLAIN WASHER	NOS	4
3	1512663	-	PART	CASTOR SPACER	NOS	4
4	1512660	0506266	PART	CASTOR WHEEL	NOS	4
5	**1131545**	**0711495**	**ASSEMBLY**	**EVAPORATOR ASSEMBLY**	**NOS**	**1**
6	**-**	**0712904**	**ASSEMBLY**	**EVAPORATOR MOTOR ASSEMBLY**	**NOS**	**1**
7	1508122	0201135	PART	SENSOR CLIP COIL	NOS	1
8	1514594	0202684	PART	SENSOR HOLDING CLAMP	NOS	1
9	1510163	0201310	PART	DRAIN GASKET	NOS	1
10	1524171	0201886	PART	DEW COLLECTOR	NOS	1
11	1523567	0201269	PART	EVAP FAN GUARD FOR	NOS	1
12	1511722	-	PART	M5X14 MM SS304 TH/HD SCREW	NOS	4
13	1516600	0201887	PART	DEW COLLECTOR DRAIN COVER	NOS	1
14	**1136468**	**0712828**	**ASSEMBLY**	**CONDENSING UNIT ASSEMBLY**	**NOS**	**1**
15	**1136469**	**0712974**	**ASSEMBLY**	**POWER BOX ASSEMBLY**	**NOS**	**1**
16	1111854	0600807	PART	EMI FILTER 6A	NOS	1
17	1502183	-	PART	SCREW T4 X 12 (T4) SUS	NOS	2
18	1133371	0602595	PART	LED DRIVER 20W 24VDC	NOS	1
19	1525166	0203416	PART	LED BRACKET TOP	NOS	2
20	1525322	0602660	PART	PL LED BAR C-TYPE CV 2.0W L510MM	NOS	1
21	1111141	0115768	PART	LED CONNECTOR BOX COVER LT	NOS	1
22	1511531	0505442	PART	SHELF HOLDER RACK	NOS	4
23	**1117813**	**0703893**	**ASSEMBLY**	**GLASS DOOR ASSEMBLY RT**	**NOS**	**1**
24	1516320	0506206	PART	BOTTOM HINGE RT	NOS	1
25	1500923	0502613	PART	HINGE COLLAR BUSH	NOS	1
26	1511618	-	PART	M5 X 20 SS304 HEX HEAD SCREW	NOS	6
27	1516317	0201924	PART	PC DOOR SPACER	NOS	2
28	1513377	0505879	PART	SHELF CLIP	NOS	16
29	1107276	0114120	PART	CANOPY SUPPORT ANGLE	NOS	1
30	1131728	0121383	PART	STOPER CHANNEL	NOS	1
31	**1136479**	**0712972**	**ASSEMBLY**	**CANOPY ASSEMBLY**	**NOS**	**1**
32	1518192	0506505	PART	PNTD STRIP SHELF	NOS	4
33	1527039	0712826	PART	SS DRAIN PAN	NOS	1
34	1506586	0200997	PART	RUBBER VIBRATION PAD SILICON	NOS	4
35	**1137078**	**0712829**	**ASSEMBLY**	**DRAIN PAN FAN DUCT ASSEMBLY**	**NOS**	**1**
36	1135555	0122171	PART	DRAIN PAN PIPE HOLDER RT	NOS	1
37	1135554	0122204	PART	DRAIN PAN PIPE HOLDER LT	NOS	1
38	1526893	0222752	PART	DRAIN PIPE ELBOW	NOS	1
39	1511518	0201534	PART	DRAIN OUTLET VALVE	NOS	1
40	1519474	0506618	PART	AIR VENT VALVE	NOS	1
41	1136483	0122283	PART	DOOR SWITCH COVER	NOS	1
42	1136515	0122218	PART	DOOR SWITCH BRACKET	NOS	1
43	1114311	0601014	PART	DOOR SWITCH HARNESS	NOS	1
44	1508085	0201092	PART	RUBBER GROMET	NOS	1
45	1502164	-	PART	SCREW S3 X 12 (T4) SUS	NOS	2
46	1504846	-	PART	DOOR SWITCH MAGNET	NOS	1
47	NEW CODE	0222754	PART	DRAIN PIPE OUTLET	NOS	1
48	1510783	0505553	PART	5 STAR DOME PENGUIN RT 50MM	NOS	1
49	1507711	0600574	PART	HARNESS EVAPORATOR MOTOR	NOS	1
50	1124685	0601535	PART	SENSOR HARNESS	NOS	1
51	1136343	0601857	PART	ICF EXT HARNESS	NOS	1
52	1527286	0507340	PART	PWR CORD COT AU/NZ TYPE-I 10A 1MM2/3M/TT	NOS	1

KW COMMERCIAL KITCHEN
Distributed by KW Commercial Kitchen | 1300 001 366
www.kwcommercial.com.au | sales@kwcommercial.com.au

4. REFRIGERATOR ASSEMBLY (HRWE77LS4-LDGN)

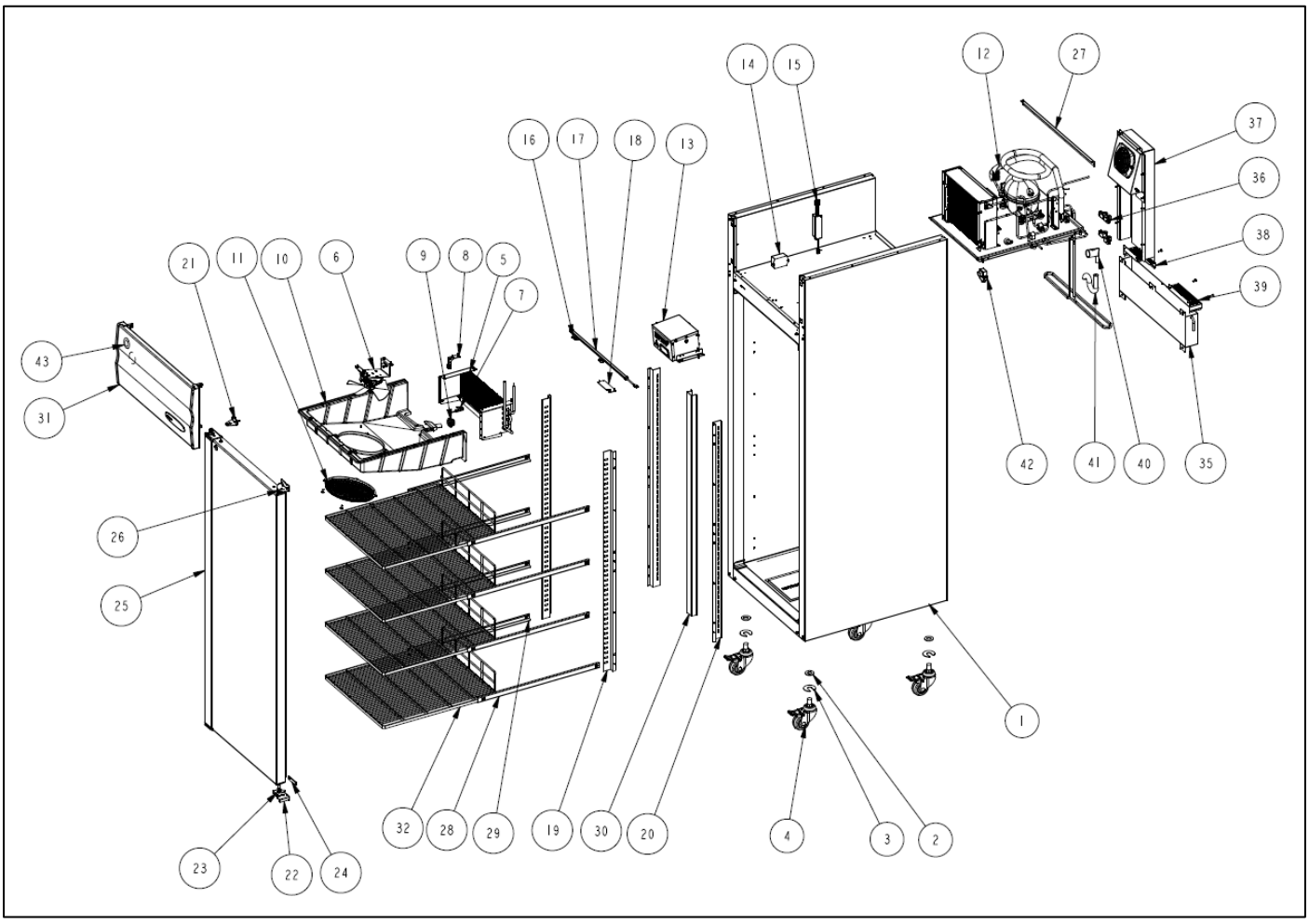

Distributed by KW Commercial Kitchen | 1300 001 366
www.kwcommercial.com.au | sales@kwcommercial.com.au

HRWE77LS4-SERIES

INDEX NO.	SAP CODE	DRAWING NO	PART/ASSEMBLY	DESCRIPTION	UOM	HRWE77LS4-LDGN
1	1136494	0712959	PART	CABINET	NOS	1
2	1512662	-	PART	PLAIN WASHER	NOS	4
3	1512663	-	PART	CASTOR SPACER	NOS	4
4	1512660	0506266	PART	CASTOR WHEEL	NOS	4
5	**1131545**	**0711495**	**ASSEMBLY**	**EVAPORATOR ASSEMBLY**	**NOS**	**1**
6	**-**	**0712904**	**ASSEMBLY**	**EVAPORATOR MOTOR ASSEMBLY**	**NOS**	**1**
7	1508122	0201135	PART	SENSOR CLIP COIL	NOS	1
8	1514594	0202684	PART	SENSOR HOLDING CLAMP	NOS	1
9	1510163	0201310	PART	DRAIN GASKET	NOS	1
10	1524171	0201886	PART	DEW COLLECTOR	NOS	1
11	1523567	0201269	PART	EVAP FAN GUARD	NOS	1
12	**1136468**	**0712828**	**ASSEMBLY**	**CONDENSING UNIT ASSEMBLY**	**NOS**	**1**
13	**1136469**	**0712974**	**ASSEMBLY**	**POWER BOX ASSEMBLY**	**NOS**	**1**
14	1111854	0600807	PART	EMI FILTER 6A	NOS	1
15	1133371	0602595	PART	LED DRIVER 20W 24VDC	NOS	1
16	1525166	0203416	PART	LED BRACKET TOP	NOS	2
17	1525322	0602660	PART	PL LED BAR C-TYPE CV 2.0W L510MM	NOS	1
18	1111141	0115768	PART	LED CONNECTOR BOX COVER LT	NOS	1
19	1117560	0117055	PART	GN RACK FRONT LD	NOS	2
20	1117561	0117056	PART	GN RACK BACK LD	NOS	2
21	1115709	0117299	PART	DOOR LOCK BKT	NOS	1
22	1520365	0506809	PART	BOTTOM HINGE RT	NOS	1
23	1508146	0201703	PART	SUS PLASTIC HINGE COLLAR - HINGE	NOS	1
24	1508739	0201166	PART	SUS DOOR SPACER	NOS	4
25	**1115998**	**0710125**	**ASSEMBLY**	**LONG DOOR ASSEMBLY RT WL**	**NOS**	**1**
26	1510964	0506838	PART	TOP HINGE RT	NOS	1
27	1107276	0114120	PART	CANOPY SUPPORT ANGLE	NOS	1
28	1112769	0116860	PART	C TYPE RAIL RT GN	NOS	4
29	1112770	0116861	PART	C TYPE RAIL LT GN	NOS	4
30	1113062	0116335	PART	SUPPORT CHANNEL	NOS	1
31	**1107864**	**0701479**	**ASSEMBLY**	**CANOPY ASSEMBLY**	**NOS**	**1**
32	1524214	0507080	PART	PNTD STRIP SHELF	NOS	4
33	1527039	0712826	PART	SS DRAIN PAN	NOS	1
34	1506586	0200997	PART	RUBBER VIBRATION PAD SILICON	NOS	5
35	**1137078**	**0712829**	**ASSEMBLY**	**DRAIN PAN FAN DUCT ASSEMBLY**	**NOS**	**1**
36	1135555	0122171	PART	DRAIN PAN PIPE HOLDER RT	NOS	1
37	1135554	0122204	PART	DRAIN PAN PIPE HOLDER LT	NOS	1
38	1526893	0222752	PART	DRAIN PIPE ELBOW	NOS	1
39	NEW CODE	0222754	PART	DRAIN PIPE OUTLET	NOS	1
40	1519474	0506618	PART	AIR VENT VALVE	NOS	1
41	1510783	0505553	PART	5 STAR DOME PENGUIN RT 50MM	NOS	1
42	1507711	0600574	PART	HARNESS EVAPORATOR MOTOR	NOS	1
43	1124685	0601535	PART	SENSOR HARNESS	NOS	1
44	1136343	0601857	PART	ICF EXT HARNESS	NOS	1
45	1124621	0601522	PART	DOOR SWITCH HARNESS	NOS	1
46	1527286	0507340	PART	PWR CORD COT AU/NZ TYPE-I 10A 1MM2/3M/TT	NOS	1

KW COMMERCIAL KITCHEN
Distributed by KW Commercial Kitchen | 1300 001 366
www.kwcommercial.com.au | sales@kwcommercial.com.au

5. EVAPORATOR ASSEMBLY

(DRAWING NO. 0711495)

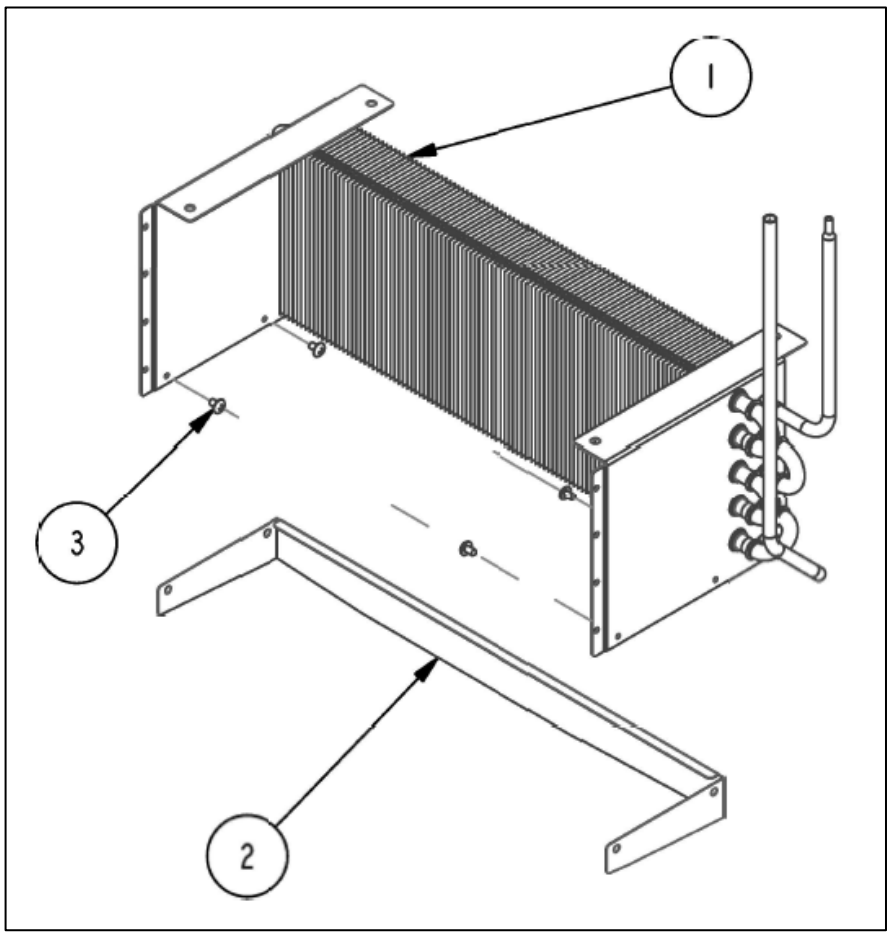

INDEX NO.	SAP CODE	DRAWING NO	PART/ ASSEMBLY	DESCRIPTION	UOM	HRWE77LS4 SERIES
1	1129031	0507018	PART	EVAPORATOR	NOS	1
2	-	0121718	PART	COIL BLANK OFF	NOS	1
3	1502189	-	PART	SCREW T4 X12 (T4) SUS	NOS	2

Distributed by KW Commercial Kitchen | 1300 001 366
www.kwcommercial.com.au | sales@kwcommercial.com.au

6. EVAPORATOR MOTOR ASSEMBLY

(DRAWING NO. 0712904)

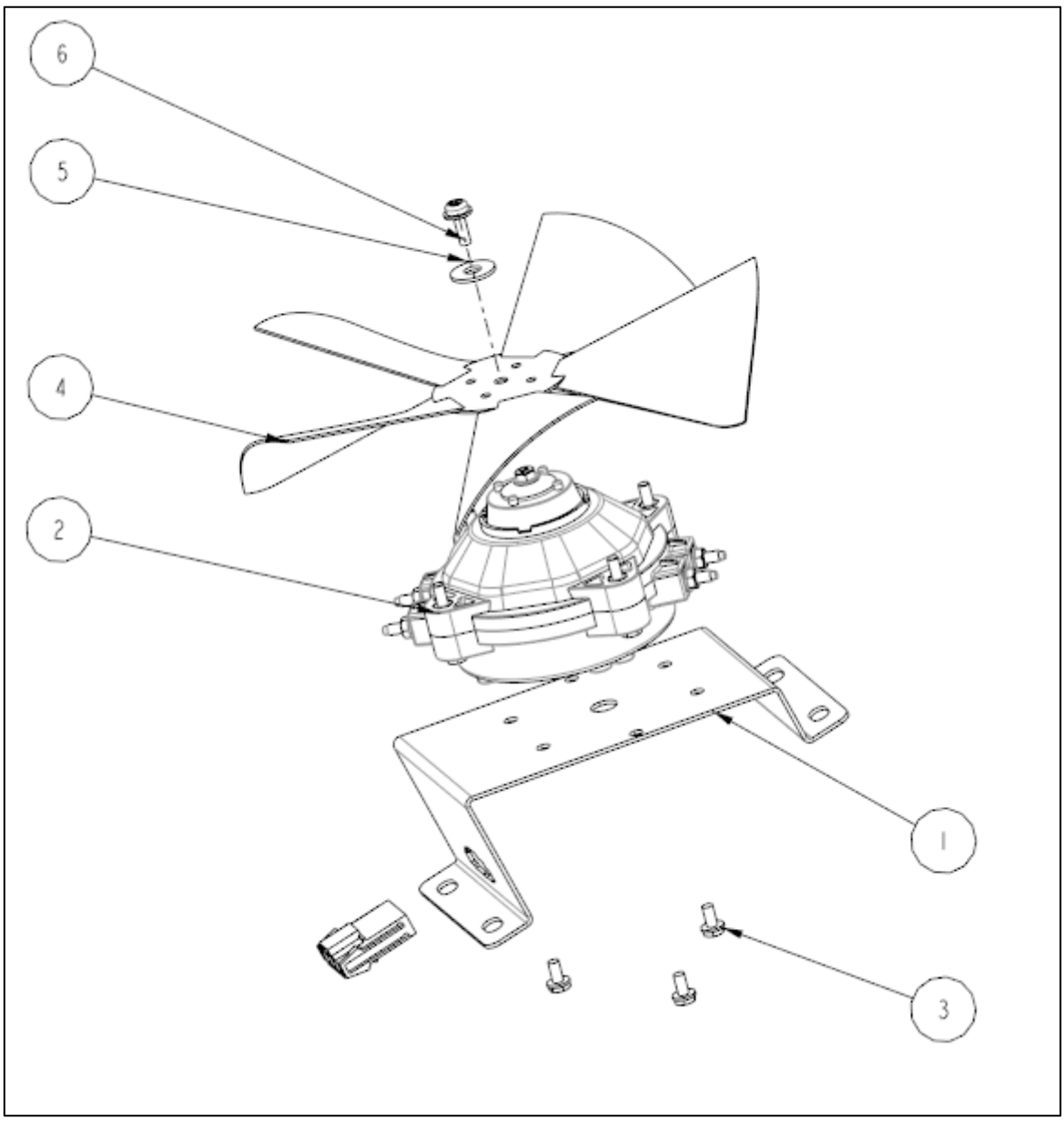

INDEX NO.	SAP CODE	DRAWING NO	PART/ ASSEMBLY	DESCRIPTION	UOM	HRWE77LS4
1	1136473	0122219	PART	EVAP MOTOR STAND	NOS	1
2	1525005	-	PART	EC MOTOR SAIWEI NEC4810	NOS	1
3	1512981	-	PART	SCREW STAR HEX HEAD M4X8 (T2) SUS	NOS	3
4	1116260	0300876	PART	IMPELLER-WRL 5 X 9" V 28 DEG	NOS	1
5	1502216	-	PART	WASHER W8 SUS	NOS	1
6	1506257	-	PART	SCREW M4 X 12 HEX HD PHILIPS	NOS	1

KW COMMERCIAL KITCHEN
Distributed by KW Commercial Kitchen | 1300 001 366
www.kwcommercial.com.au | sales@kwcommercial.com.au

7. CONDENSING UNIT ASSEMBLY

(DRAWING NO. 0712828)

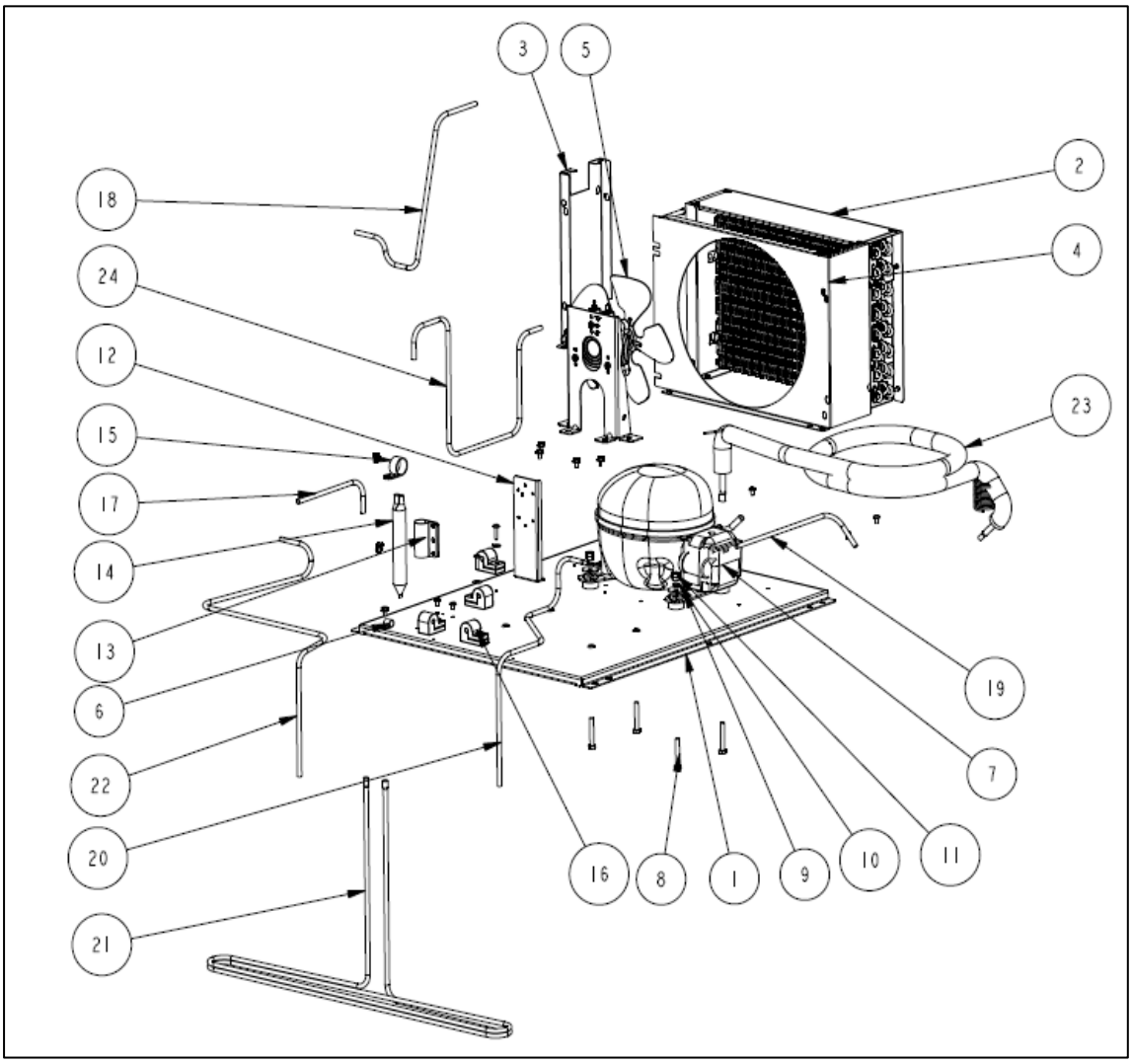

Distributed by KW Commercial Kitchen | 1300 001 366
www.kwcommercial.com.au | sales@kwcommercial.com.au

HRWE77LS4-SERIES

INDEX NO.	SAP CODE	DRAWING NO	PART/ ASSEMBLY	DESCRIPTION	UOM	HRWE77LS4
1	1136471	0712822	PART	WELDED UNIT FRAME	NOS	1
2	1118654	0504012	PART	MS CONDENSER	NOS	1
3	1128275	0109089	PART	CONDENSER COVER SIDE	NOS	1
4	1128274	0109088	PART	CONDENSER COVER CENTER	NOS	1
5	**-**	**0712961**	**ASSEMBLY**	**CONDENSER MOTOR ASSEMBLY**	**NOS**	**1**
6	1504667	-	PART	CORD FIXTURE V SMALL	NOS	1
7	1511736	-	PART	COMPRESSOR EMBRACO EM2X3125U R290	NOS	1
8	1506255	-	PART	HEX SUS BOLT M6X40	NOS	4
9	1502212	-	PART	WASHER FOR COMPRESSOR	NOS	4
10	1502199	-	PART	SPRING WASHER M6	NOS	4
11	1502092	-	PART	NUT M6	NOS	8
12	1105942	0113675	PART	DRIER STAND	NOS	1
13	1518963	0113981	PART	DRIER FIXING CLAMP(BIG)	NOS	1
14	1500277	0400098	PART	DRIER 15GM DIA19 L=150	NOS	1
15	1505109	-	PART	CORD FIXTURE ADJUSTABLE V SIZE -1 INCH	NOS	1
16	1506586	0200997	PART	RUBBER VIBRATION PAD SILICON	NOS	4
17	-	0401626	PART	CHARGING PIPE DRIER	NOS	1
18	-	0401836	PART	COND INLET PIPE	NOS	1
19	-	0401632	PART	COMPRESSOR CHARGING PIPE	NOS	1
20	-	0401834	PART	DISCHARGE PIPE EXTENSION	NOS	1
21	-	0401832	PART	DISCHARGE PIPE WITH HEAT SHRINK DRAIN PAN	NOS	1
22	-	0401835	PART	DISCHARGE PIPE DRAIN PAN TO HEAT LOOP	NOS	1
23	1137055	0401883	PART	SUCTION PIPE WITH CAPILARY SOLDERING	NOS	1
24	-	0401630	PART	INLET PIPE DRIER	NOS	1
25	1112799	0600907	PART	COMPRESSOR HARNESS	NOS	1

KW COMMERCIAL KITCHEN
Distributed by KW Commercial Kitchen | 1300 001 366
www.kwcommercial.com.au | sales@kwcommercial.com.au

8. DRAIN PAN FAN DUCT ASSEMBLY:

(DRAWING NO. 0712829)

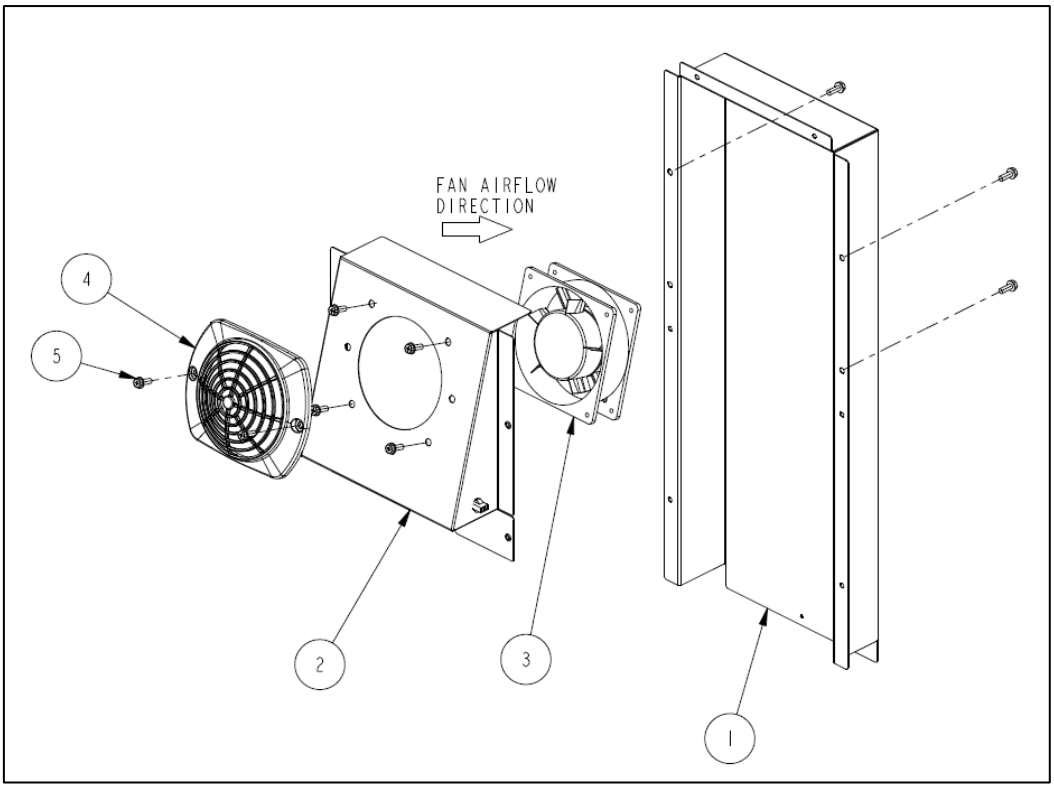

INDEX NO.	SAP CODE	DRAWING NO	PART/ASSEMBLY	DESCRIPTION	UOM	HRWE77LS4 SERIES
1	1135558	0122172	PART	FAN DUCT	NOS	1
2	1135556	0122160	PART	FAN MOUNTING	NOS	1
3	1523138	-	PART	ICF MOTOR 5.5W	NOS	1
4	1510812	0201363	PART	FAN GUARD PCABS ICF GREY	NOS	1
5	1509560	-	PART	SCREW TAPTITE M5X14 MS	NOS	10

KW COMMERCIAL KITCHEN
Distributed by KW Commercial Kitchen | 1300 001 366
www.kwcommercial.com.au | sales@kwcommercial.com.au

9. CONDENSER FAN MOTOR ASSEMBLY:

(DRAWING NO. 0712961)

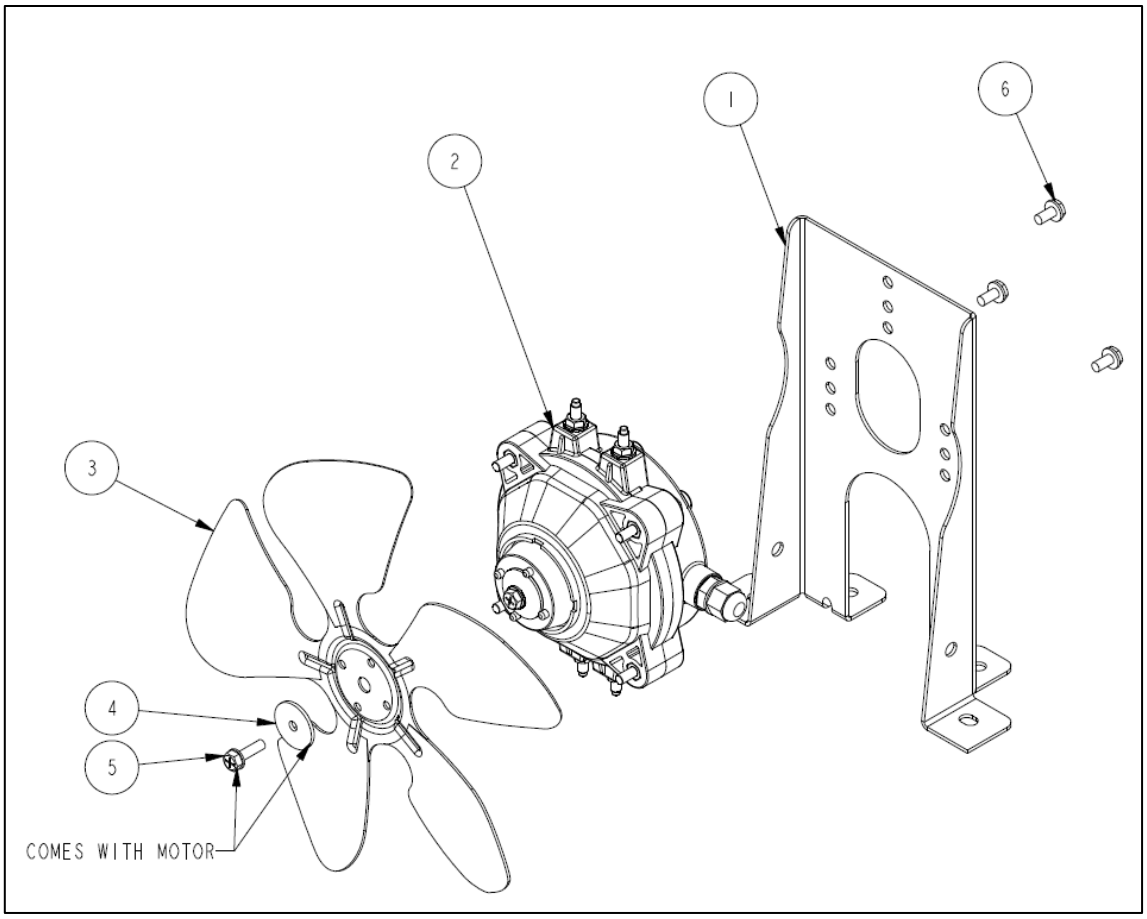

INDEX NO.	SAP CODE	DRAWING NO	PART/ ASSEMBLY	DESCRIPTION	UOM	HRWE77LS4 SERIES
1	1110086	0115146	PART	CONDENSOR MOTOR BRACKET	NOS	1
2	1525005	-	PART	EC MOTOR SAIWEI NEC4810_18W_8+9INCH	NOS	1
3	1114886	-	PART	IMPELLER -WRL 5 X 9" V 28 DEG	NOS	1
4	-	-	PART	WASHER FOR MOTOR(COMES WITH MOTOR)	NOS	1
5	-	-	PART	MOTOR SCREW(COMES WITH MOTOR)	NOS	1
6	1512981	-	PART	SCREW STAR HEX HEAD M4X8 (T2) SUS	NOS	3

KW COMMERCIAL KITCHEN
Distributed by KW Commercial Kitchen | 1300 001 366
www.kwcommercial.com.au | sales@kwcommercial.com.au

10. POWER BOX ASSEMBLY

(DRAWING NO. 0712974)

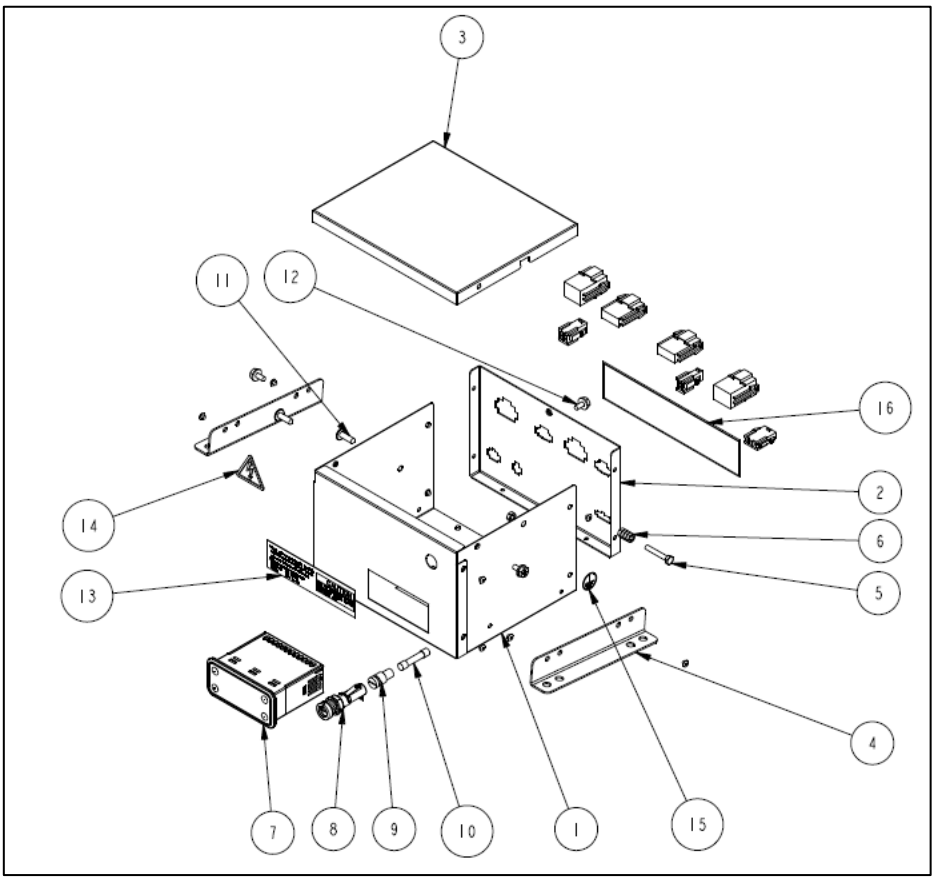

INDEX NO.	SAP CODE	DRAWING NO	PART/ASSEMBLY	DESCRIPTION	UOM	HRWE77LS4 SERIES
1	1131729	0121639	PART	POWER BOX BASE	NOS	1
2	1136529	0122295	PART	BACK PLATE	NOS	1
3	1107293	0116037	PART	CONTROL BOX COVER	NOS	1
4	1107867	0114475	PART	LEG CONTROL BOX	NOS	2
5	1502067	-	PART	BOLT EARTHING M4X25-BRASS	NOS	1
6	1502088	-	PART	NUT M4 EARTHING - BRASS	NOS	5
7	1515957	-	PART	ELECT CONTROLLER XR06CH-5N5C5-B_DIXELL	NOS	1
8	1510504	-	PART	FUSE SOCKET,0031.1693.SI,IP40_UC	NOS	1
9	1510505	-	PART	FUSE CARRIER,0031.1666.SI,IP40_UC	NOS	1
10	1510503	-	PART	FUSE 10A,8020.5021.G.SI _UC	NOS	1
11	1502192	-	PART	SCREW T5 X 15 (T4) MZN	NOS	2
12	1508312	-	PART	SCREW TAPTITE M4X8	NOS	3
13	NEW CODE	0507341	PART	TEMPERATURE LABEL	NOS	1
14	1510405	0502436	PART	CAUTION STICKER HIGH VOLTAGE	NOS	1
15	1510404	0502251	PART	CAUTION STICKER EARTHING	NOS	1
16	1604767	0507385	PART	CONNECTOR LABEL	NOS	1
17	1136465	0601873	PART	POWER BOX HARNESS	NOS	1
18	1119468	0601231	PART	SENSOR CONNECTING HARNESS DIXELL	NOS	1

KW COMMERCIAL KITCHEN
Distributed by KW Commercial Kitchen | 1300 001 366
www.kwcommercial.com.au | sales@kwcommercial.com.au

11. DOOR ASSEMBLY HALF DOOR BOTTOM

(DRAWING NO. 0703652)

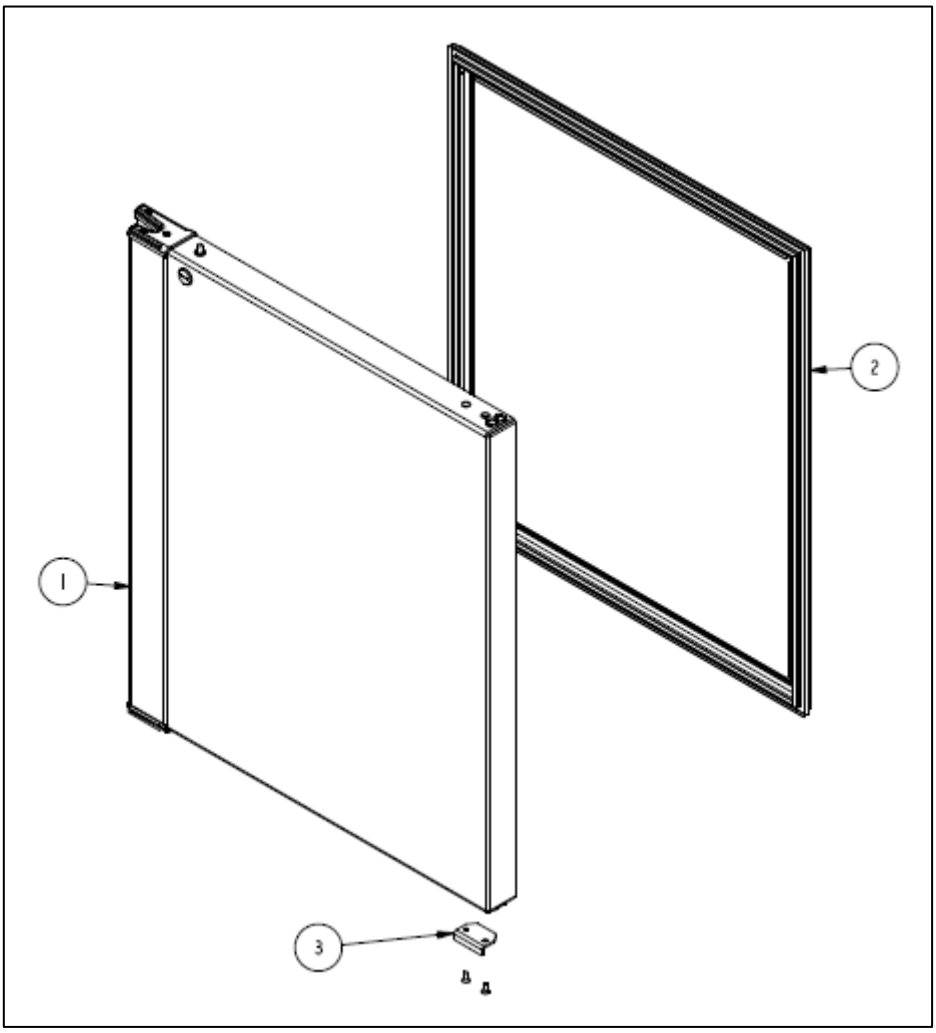

INDEX NO.	SAP CODE	DRAWING NO	PART/ ASSEMBLY	DESCRIPTION	UOM	HRWE77LS4
1	1116032	0703417	PART	FOAM DOOR RT	NOS	1
2	1514301	0201139	PART	DOOR GASKET	NOS	1
3	1514112	0117246	PART	DOOR STOPPER TYPE 2	NOS	1

KW COMMERCIAL KITCHEN
Distributed by KW Commercial Kitchen | 1300 001 366
www.kwcommercial.com.au | sales@kwcommercial.com.au

12. DOOR ASSEMBLY HALF DOOR TOP

(DRAWING NO. 0703652)

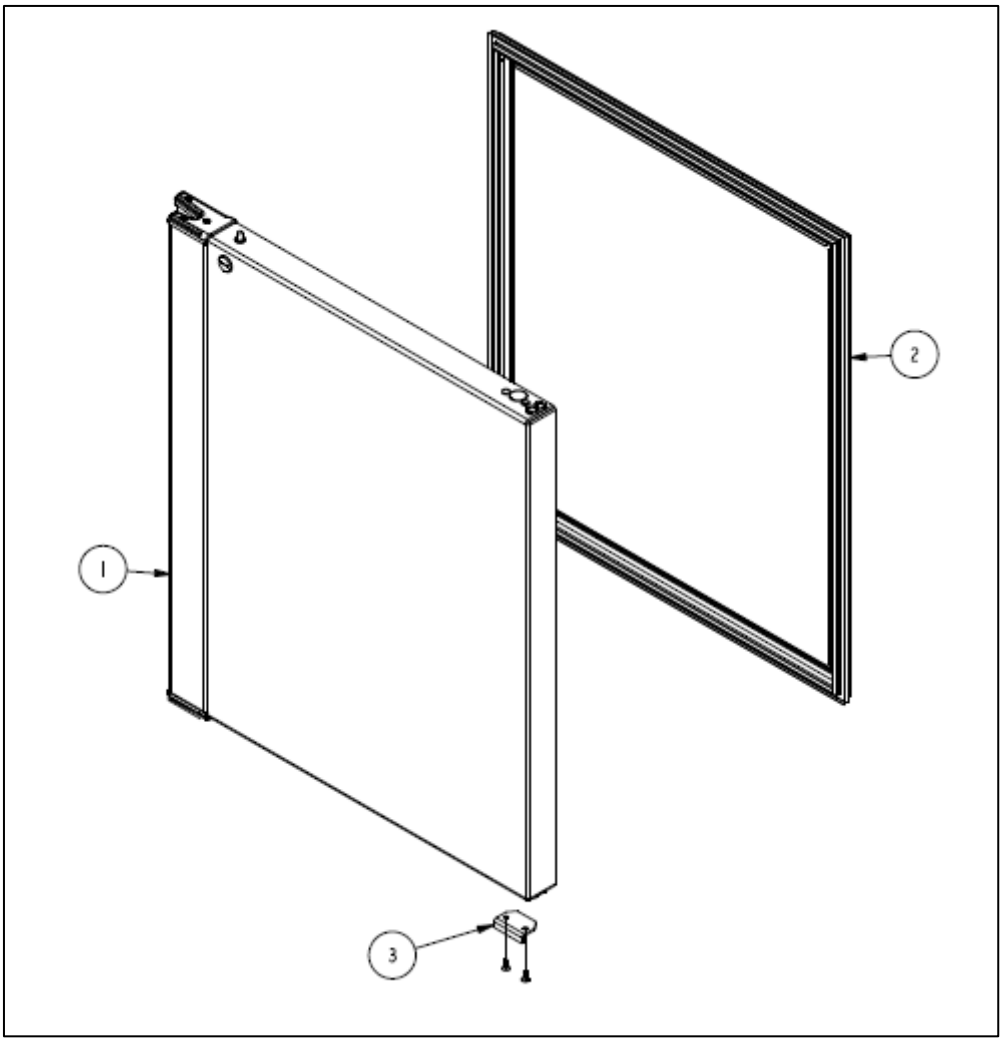

INDEX NO.	SAP CODE	DRAWING NO	PART/ ASSEMBLY	DESCRIPTION	UOM	HRWE77LS4
1	1116034	0703417	PART	FOAMED DOOR RT WLM	NOS	1
2	1514301	0201139	PART	DOOR GASKET	NOS	1
3	1514112	0117246	PART	DOOR STOPPER TYPE 2	NOS	1

13. DOOR ASSEMBLY LONG DOOR

(DRAWING NO. 0710125)

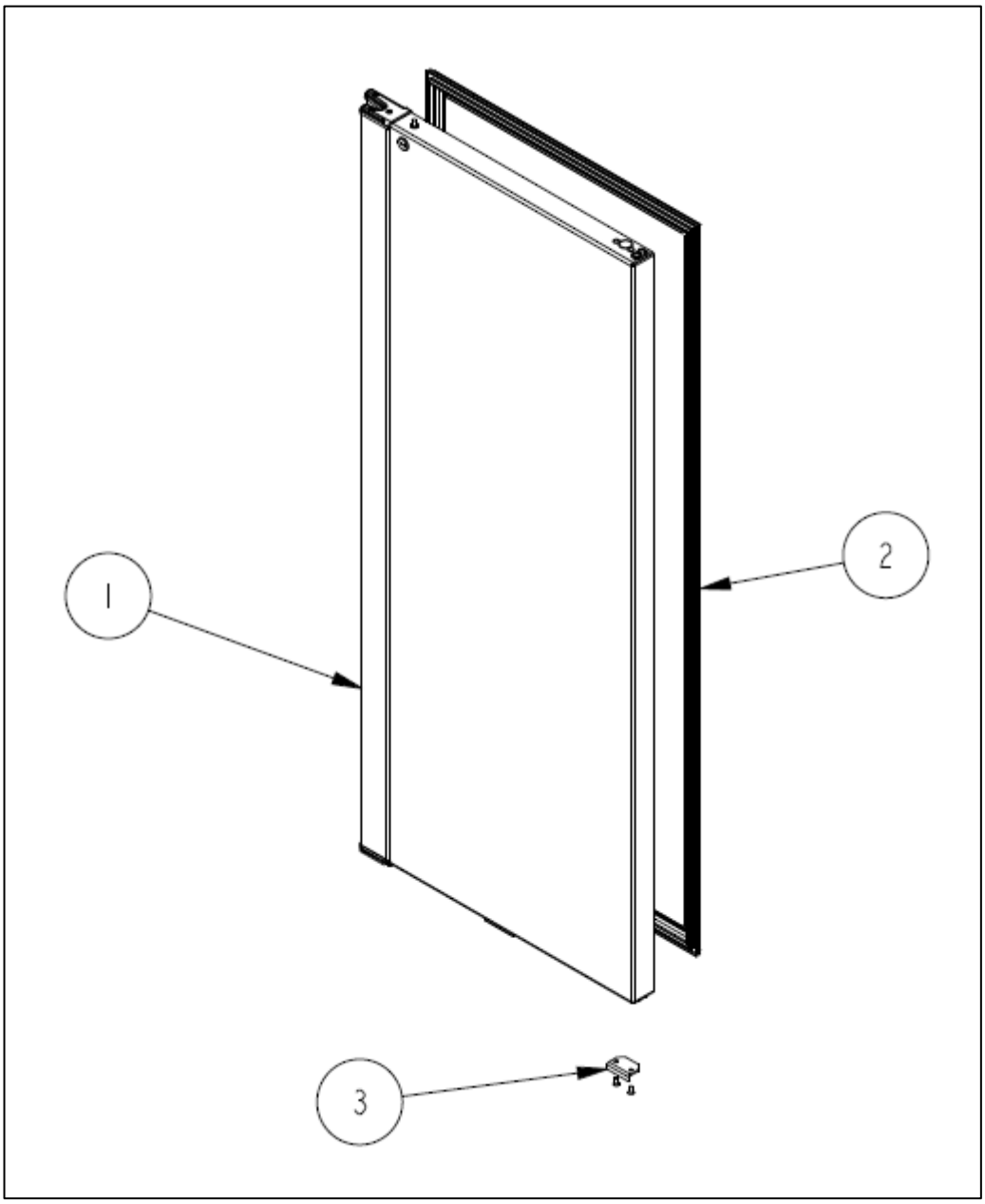

INDEX NO.	SAP CODE	DRAWING NO	PART/ ASSEMBLY	DESCRIPTION	UOM	HRWE77LS4-LDGN
1	1116035	0703415	PART	FOAMED DOOR WL RT	NOS	1
2	1514304	-	PART	DOOR GASKET	NOS	1
3	1514112	0117246	PART	NEW DOOR STOPPER	NOS	1

KW COMMERCIAL KITCHEN
Distributed by KW Commercial Kitchen | 1300 001 366
www.kwcommercial.com.au | sales@kwcommercial.com.au

14. DOOR ASSEMBLY LONG GLASS

(DRAWING NO. 0703893)

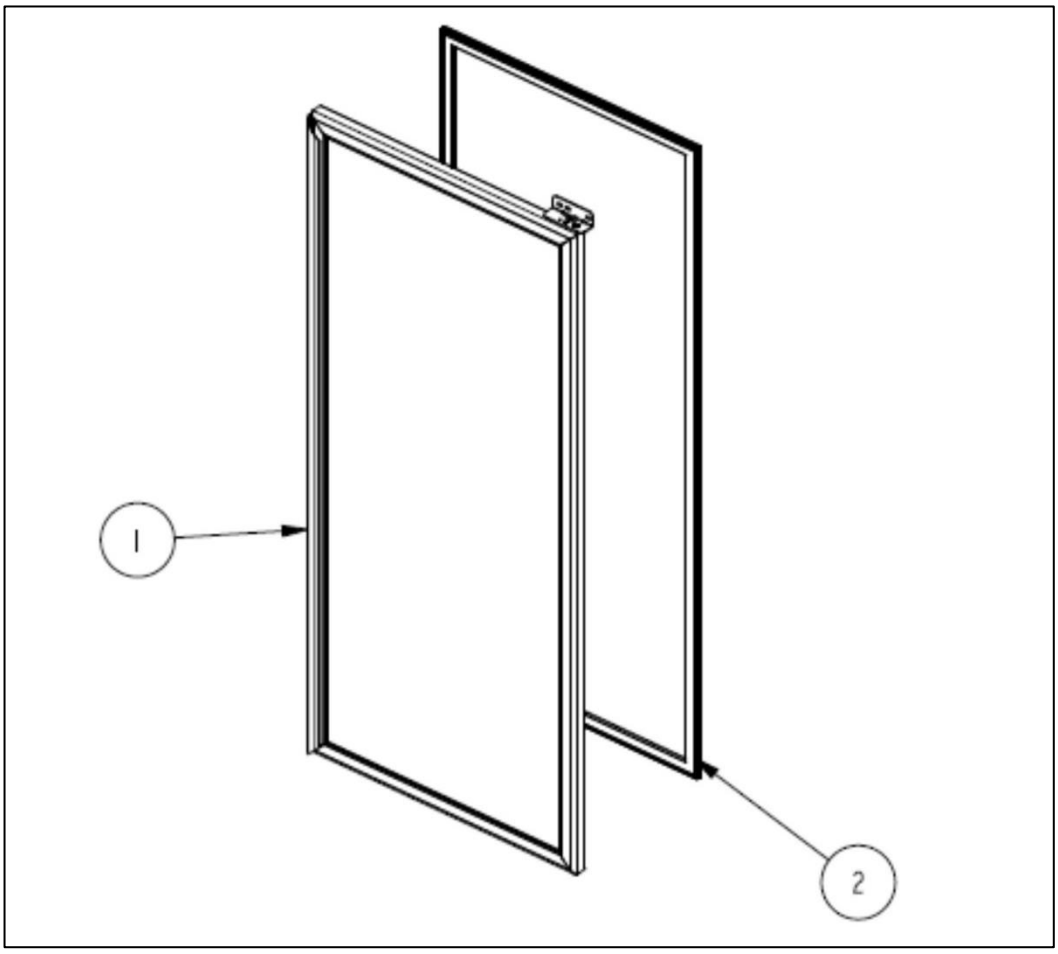

INDEX NO.	SAP CODE	DRAWING NO	PART/ ASSEMBLY	DESCRIPTION	UOM	HRWE77LS4-LG
1	-	0703894	PART	GLASS DOOR RT	NOS	1
2	1516315	0201825	PART	DOOR GASKET BIG BALLON	NOS	1

Distributed by KW Commercial Kitchen | 1300 001 366
www.kwcommercial.com.au | sales@kwcommercial.com.au

15. CANOPY ASSEMBLY

(DRAWING NO. 0701479 & 0712972)

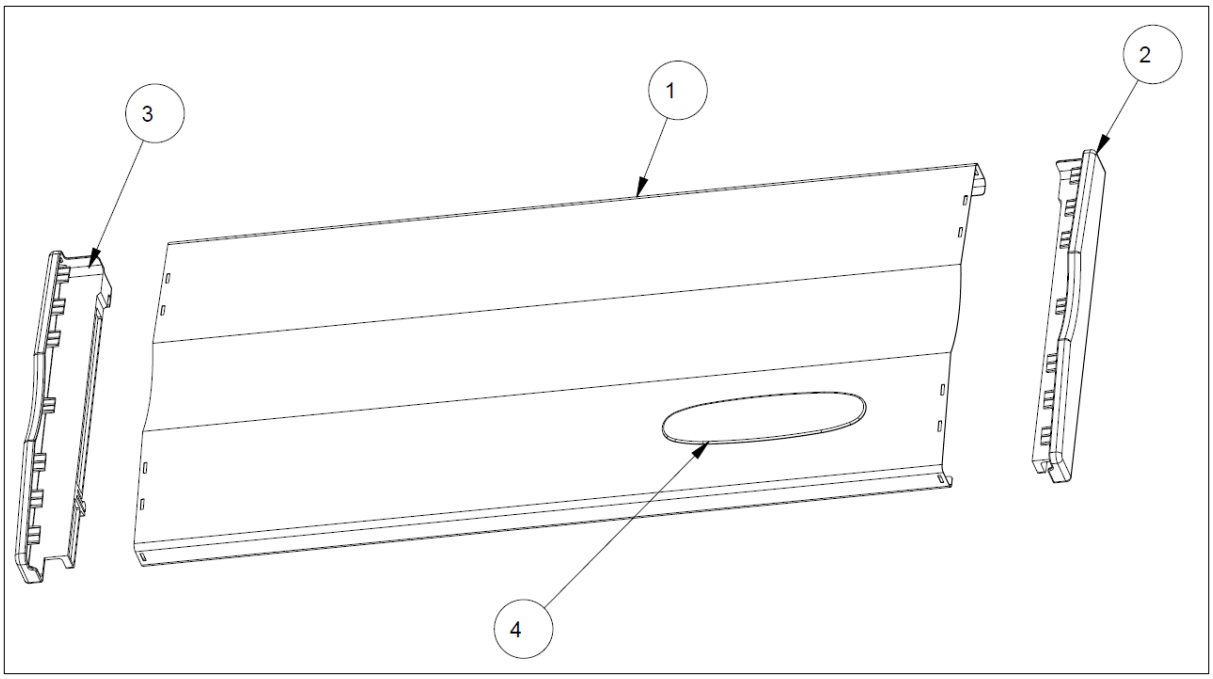

INDEX NO.	SAP CODE	DRAWING NO	PART/ ASSEMBLY	DESCRIPTION	UOM	HRWE77LS4	HRWE77LS4-LG	HRWE77LS4-LDGN
1	1107302	0114119	PART	FRONT CANOPY PANEL	NOS	1	-	1
	1136482	0122294	PART	FRONT CANOPY PANEL	NOS	-	1	-
2	1517042	0202001	PART	PLASTIC CORNER – FRONT PANEL (R)	NOS	1	1	1
3	1517043	0202002	PART	PLASTIC CORNER – FRONT PANEL (L)	NOS	1	1	1
4	1508081	0201743	PART	WINDOW PANEL	NOS	1	1	1

Distributed by KW Commercial Kitchen | 1300 001 366
www.kwcommercial.com.au | sales@kwcommercial.com.au

16. OPTIONAL PARTS (Replace Castor by)

INDEX NO.	SAP CODE	DRAWING NO	PART/ ASSEMBLY	DESCRIPTION	UOM	HRWE77LS Series
1	1515007	-	PART	LEG 90 MM	NOS	4
	1508307	-	PART	LEG 150 MM	NOS	4

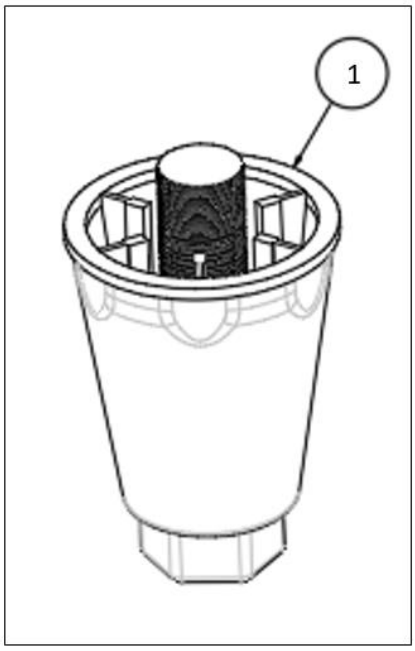

Distributed by KW Commercial Kitchen | 1300 001 366
www.kwcommercial.com.au | sales@kwcommercial.com.au

17. REVISION DETAILS:

REVISION	REVISION DETAIL	DATE