PRODUCT DOCUMENT PACK

Prepared and distributed by KW Commercial Kitchen

PRODUCT

Hoshizaki 97000192 HF-147-GN 1,365L Gastronorm Freezer 2 Door

Model / SKU: 97000192

KW COMMERCIAL KITCHEN

7/72 Canterbury Road, Bankstown NSW 2200

Phone 1300 001 366

Email sales@kwcommercial.com.au

Web www.kwcommercial.com.au

Scan for the current KW product page

DOCUMENT NOTICE

The supplier document begins on the next page. KW contact branding is added in a separate footer area and does not replace the supplier's instructions, specifications or warranty terms.

Official supplier source: /media/products/82223/documents/manual-1.pdf

COMMERCIAL REFRIGERATOR / FREEZER

HRWE - Series
HFWE - Series
HRFWE - Series

INSTRUCTION MANUAL
(ORIGINAL INSTRUCTIONS)

1001545_B

CONTENTS

PAGE

I. INSTALLATION INSTRUCTIONS----------1
1. SAFETY INFORMATION----------1
2. CONSTRUCTION----------2
3. PRODUCT NOMENCLATURE----------6
4. SPECIFICATION----------7
5. ACCESSORIES----------9
6. LOCATION----------9
7. SETUP----------10
8. DRAIN PAN----------11
9. SHELF AND SHELF CLIP----------12
10. ELECTRICAL CONNECTIONS----------13

II. OPERATING INSTRUCTIONS----------17
1. START UP----------18
2. FRONT PANEL----------18
3. CABINET TEMPERATURE SETTING----------18
4. DEFROST----------19
5. INDICATOR LIGHTS----------19
6. SHUT DOWN----------19

III. SERVICING OF APPLIANCE----------19
1. INTERIOR, EXTERIOR, SHELF----------19
2. BEFORE CALLING A SERVICE AGENT----------20
[a] TROUBLES WITH ERROR CODE INDICATION----------20
[b] TROUBLES WITHOUT ERROR CODE INDICATION----------20
3. DISPOSAL----------21
4. WARRANTY----------21

I. INSTALLATION INSTRUCTIONS

1. SAFETY INFORMATION

WARNING: RISK OF FIRE / FLAMMABLE MATERIALS

IMPORTANT NOTICE

These appliances contains small quantity of flammable refrigerant. all machines are to be serviced only by trained technicians for handling of hydrocarbon refrigerant. all electric components in this cooler are spark free, while replacing please ensure these are replaced with genuine authenticated components.

IMPORTANT REFRIGERANT AWARENESS

WARNING

Refrigeration system charged with flammable refrigerant.

R-290

WARNING: RISK OF FIRE / FLAMMABLE MATERIAL

R-290 (refrigerant grade propane only)
Ensure all operatives are aware of the cabinet being charged with highly flammable refrigerant.

- Keep clear of obstruction and ventilation openings in the appliance enclosure or in the structure for building in.
- Risk of fire flammable material. Never store any flammable, explosive and corrosive liquid or gas product in the appliance.
- Do not use mechanical devices or other means to accelerate the defrosting process, other than those recommended by the manufacturer.

KW COMMERCIAL KITCHEN
Distributed by KW Commercial Kitchen | 1300 001 366
www.kwcommercial.com.au | sales@kwcommercial.com.au

WARNING

Keep Dry

Do not wet the product or use it in potentially wet conditions. This may cause electrical leakage, resulting in electric shock or fire.

- The refrigerated unit contains R-290 and polyester lubricant. These components have a high moisture absorbing characteristics. Exposure to ambient condition should be avoided. Only approved polyester lubricants to be used. Failure to do so will void all parts and compressor warranty.
- Keep the cabinet surrounding open in order to get proper ventilation.
- Do not damage the refrigeration circuit.
- In case of damage to wiring/power cord, do not replace/repair yourself. Call your authorised service person.
- Do not use electrical appliances inside storage compartment.
- Do not move the unit while in use.

IMPORTANT

1. This booklet is an integral and essential part of the product and should be kept and preserved by the user. Please read carefully the guidelines and warnings contained herein as they are intended to provide the installer/ user with essential information for the proper installation and the continued safe use and maintenance of the product. Please preserve this booklet for any further consultation that may be necessary.

2. This is a commercial Refrigerator/Freezer, and should be destined only to be used for the purpose for which it has been expressly designed. Any other use should be considered improper and therefore dangerous. The manufacturer will not be held liable or responsible for any damage caused by improper, incorrect and unreasonable use.

3. This appliance can be used by children aged from 8 years and above and persons with reduced physical, sensory or mental capabilities or lack of experience and knowledge if they have been given supervision or instruction concerning use of the appliance in a safe way and understand the hazards involved. Children shall not play with the appliance. Cleaning and user maintenance shall not be made by children without supervision. Children should be supervised to ensure that they do not play with the appliance.

2. CONSTRUCTION

2.1 (HRWE77/HFWE77)

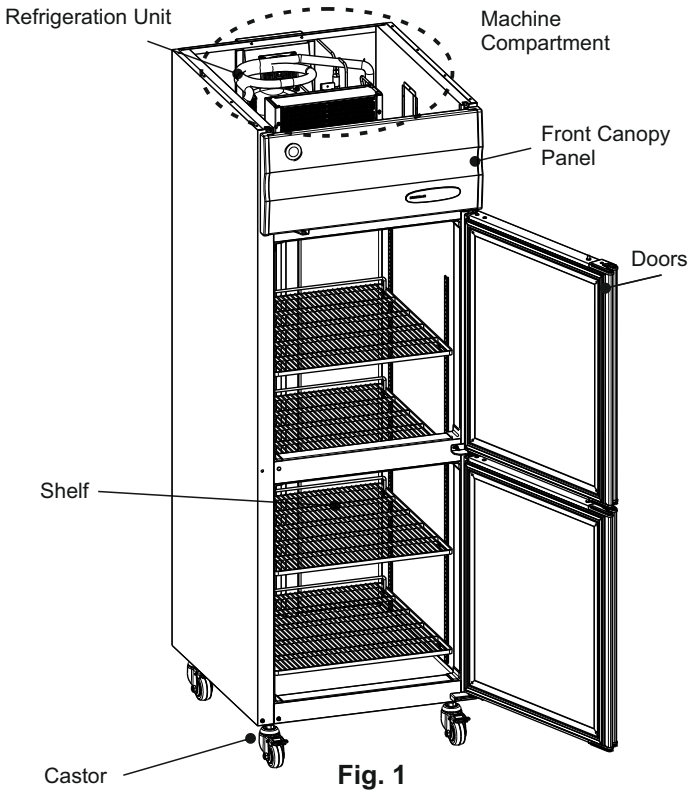

Fig. 1

2.2 (HRWE77/HFWE77-LDGN)

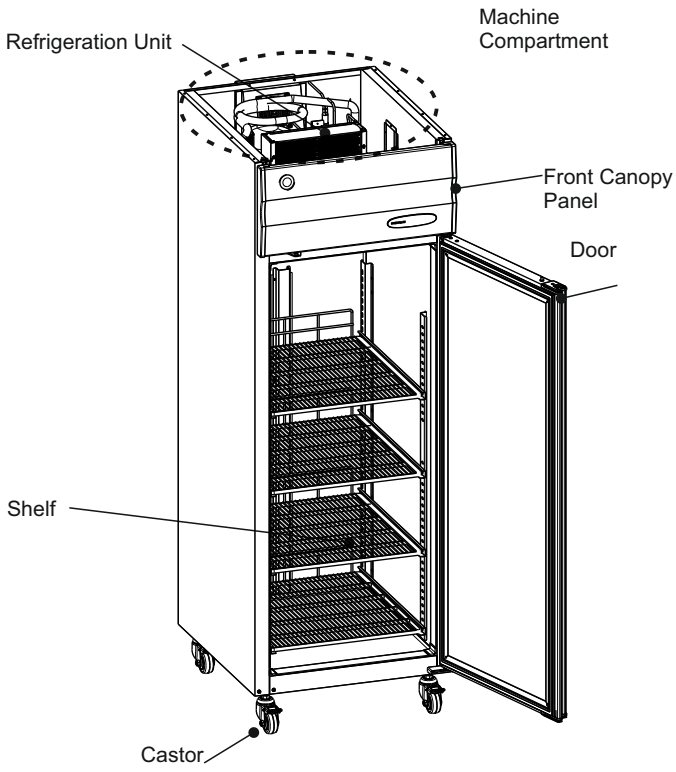

Fig. 2

KW COMMERCIAL KITCHEN
Distributed by KW Commercial Kitchen | 1300 001 366
www.kwcommercial.com.au | sales@kwcommercial.com.au

2.5 (HRWH77L-LG)

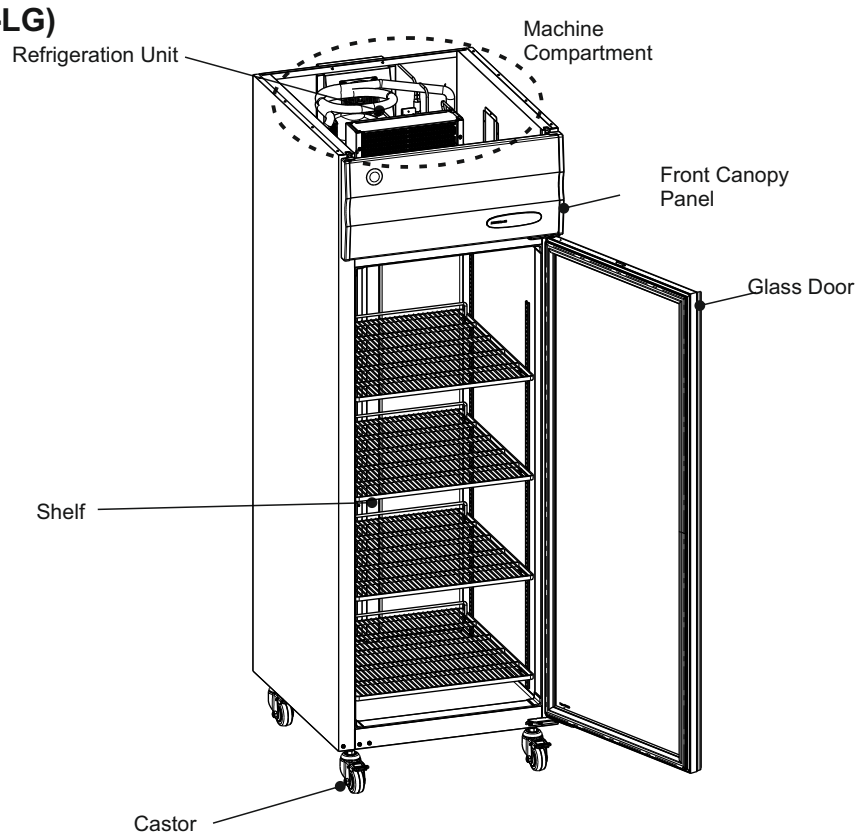

Fig. 3

2.7 (HRWH127/147/HFWH127/147)

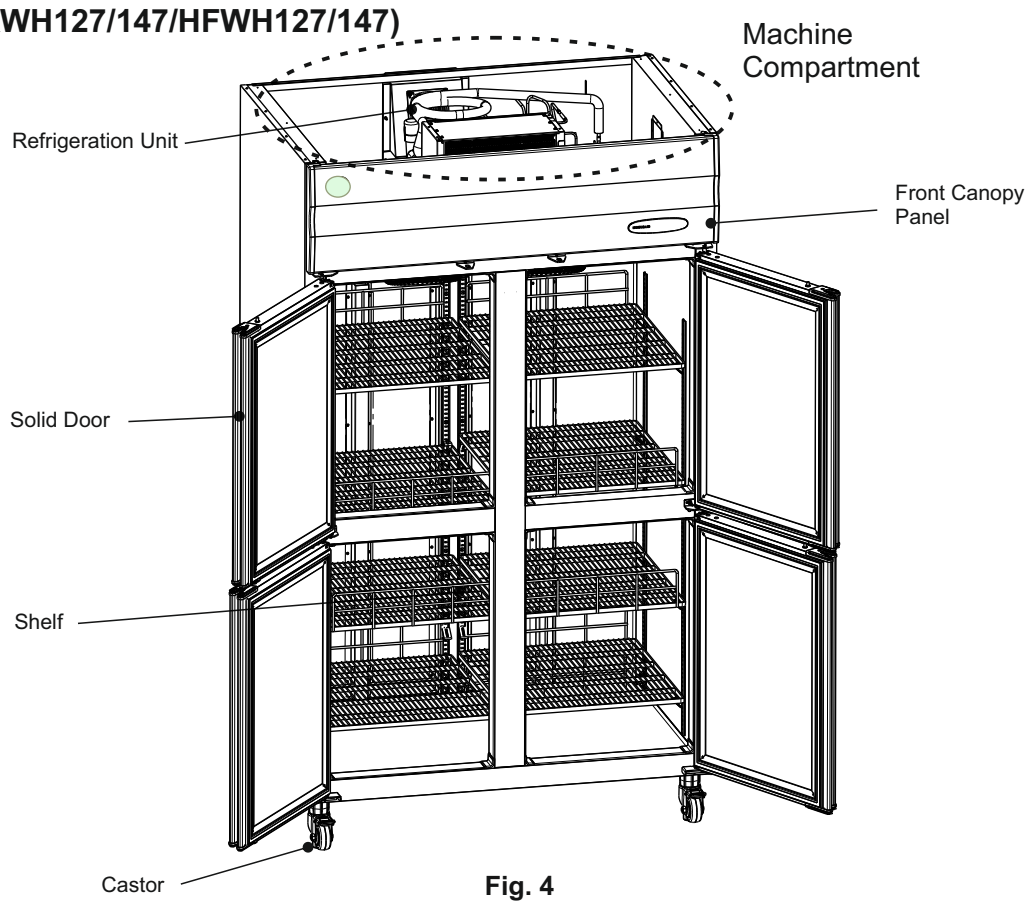

Fig. 4

KW COMMERCIAL KITCHEN
Distributed by KW Commercial Kitchen | 1300 001 366
www.kwcommercial.com.au | sales@kwcommercial.com.au

2.11 (HRWE127-LG)

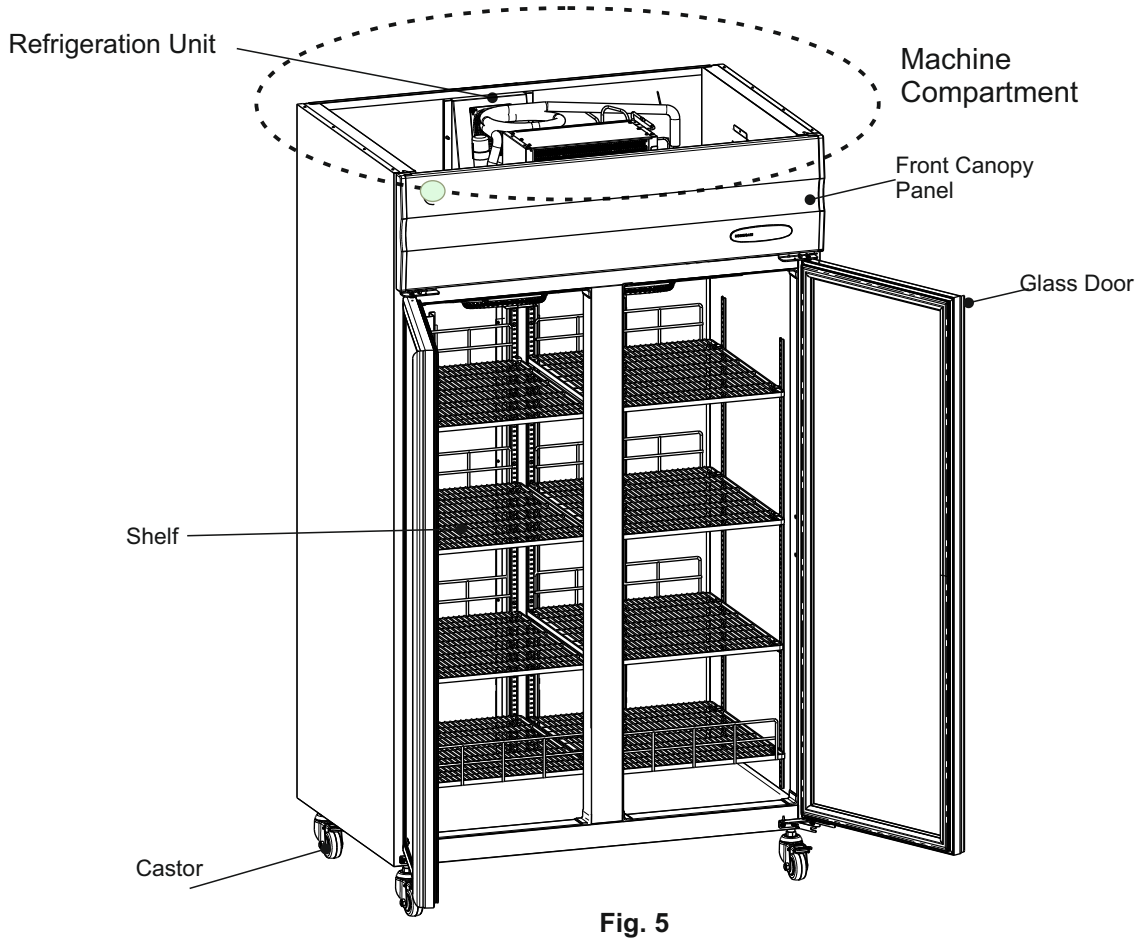

Fig. 5

2.11 (HRWE/HFWE147-LDGN)

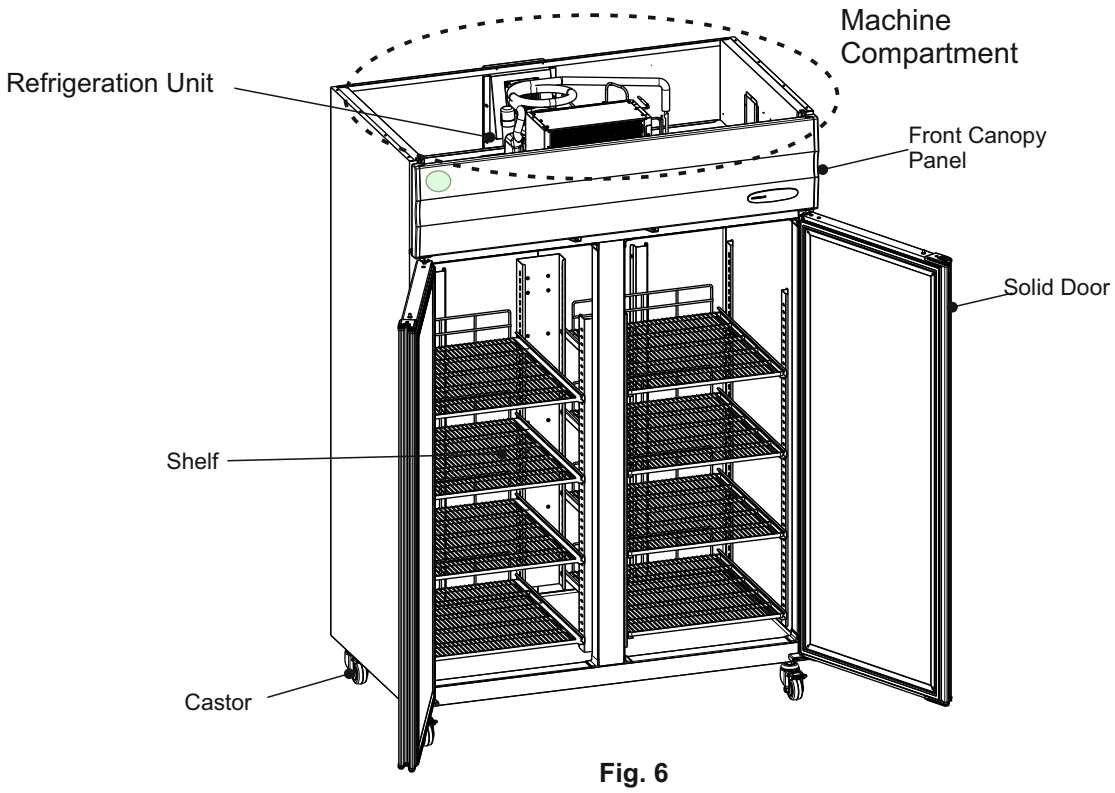

Fig. 6

KW COMMERCIAL KITCHEN
Distributed by KW Commercial Kitchen | 1300 001 366
www.kwcommercial.com.au | sales@kwcommercial.com.au

2.10 (HRFWE77)

2.10 (HRFWE127)

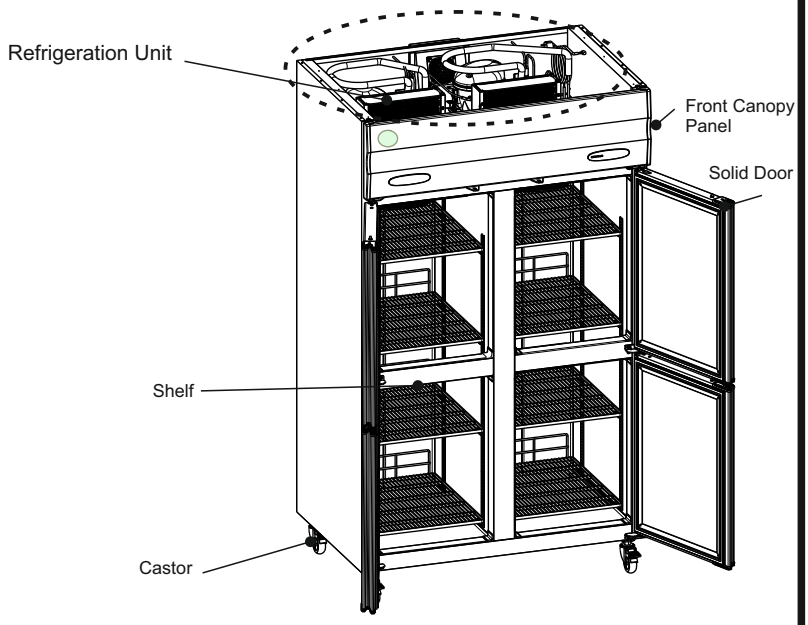

Fig. 7

Fig. 8

2.12 (HRFWE127-LD)

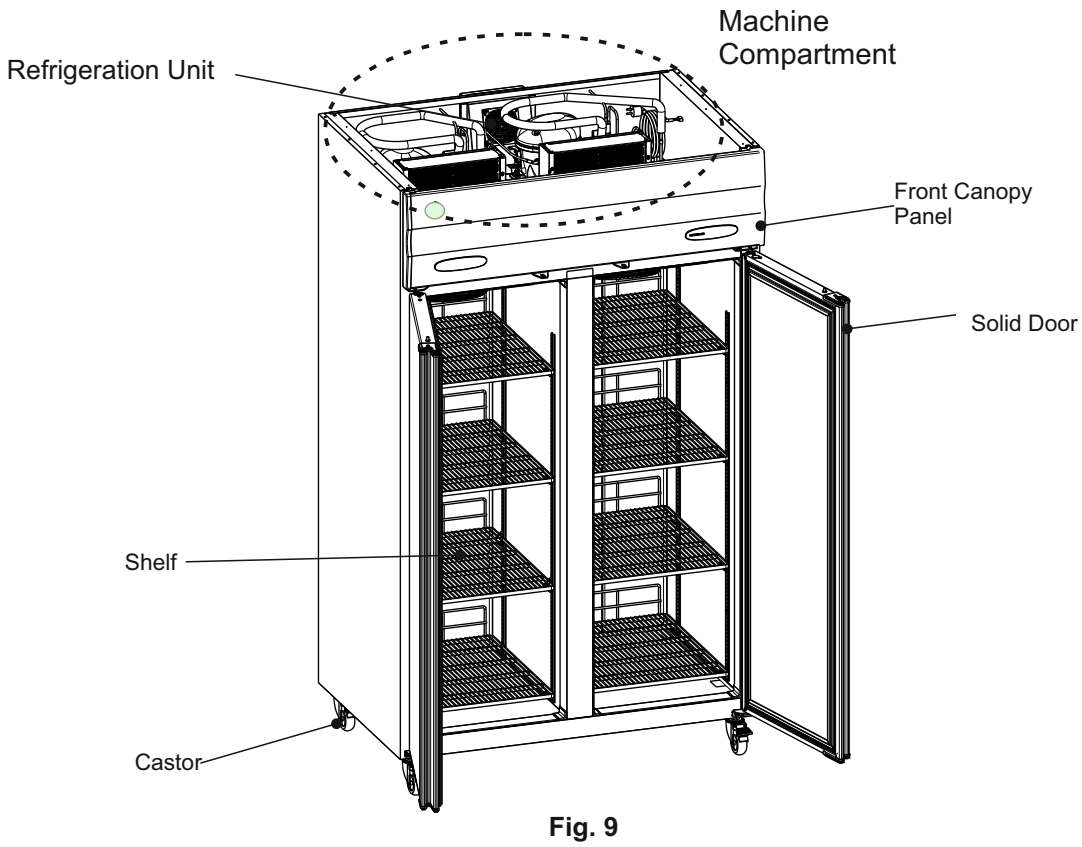

Fig. 9

KW COMMERCIAL KITCHEN
Distributed by KW Commercial Kitchen | 1300 001 366
www.kwcommercial.com.au | sales@kwcommercial.com.au

3. PRODUCT NOMENCLATURE:

HRWE77-MS4R-LDGN

H: HOSHIZAKI
R/F:REFRIGERATOR/ FREEZER
W: WESTERN

E: Energy Efficient

77: 70cm Width 70cm internal depth
147: 140cm Width 70cm internal depth
127: 120cm Width 69cm internal depth

R: Right Side handle Door

S4: SS 430 HL NO 4 FINISH
S3: SS 304 HL NO 4 FINISH

M: Standard Model (230V 50Hz)
L: LED Version (230V 50Hz)

GN: Gastronome PAN compatible (2/1 GN max)
LD: Long Door Solid
LDGN: Combination of GN & LD
HGGN: Combination of GN & Half Glass Door
LG: Long Glass Door
LGGN: Combination of GN & Long Glass Door

KW COMMERCIAL KITCHEN
Distributed by KW Commercial Kitchen | 1300 001 366
www.kwcommercial.com.au | sales@kwcommercial.com.au

ENGLISH

4. SPECIFICATIONS:

Model	HRWE77	HRWH77-LG	HRWH127	HRWH127-LG	HRWH147
Power Supply	Single phase, 230V AC, 50Hz				
Rated Current	1.3 Amp	1.3 Amp	2.3 Amp	2.3 Amp	2.3 Amp
Rated Power	280 Watt	280 Watt	520 Watt	520 Watt	520 Watt
Power cord	10 Amps / 3 meter				
Outside dimension with castor	700 (W) x 881 (D) x 2024 (H)		1200 (W) x 881(D) x 2024 (H)		1400 (W) x 881(D) x 2024 (H)
Inside dimension	596 (W) x 700 (D) x 1505 (H)		1076 (W) x 690 (D) x 1495 (H)		1296 (W) x 700 (D) x 1505 (H)
Insulation foam blowing agent	Cyclopentane				
Refrigeration system	Forced Air Circulation				
Defrost system	In compressor off cycle				
Refrigerant	R-290				
Temperature control	Electronic controller				
Defrost control	By temperature controller				
Electric circuit protection	Non resettable fuse (Glass Fuse)				
Operating condition	Ambient temperature : 10 to 43°C Voltage range rated voltage ±6%				
Shelf	4 Nos of shelves		8 Nos of shelves		
Cabinet Lamp	LED 1 Nos., 2W		LED 2 Nos., 2W		

Model	HFWE77	HFWE127	HFWE147	HRFWE77
Power Supply	Single phase, 230V AC, 50Hz			
Rated Current	1.8Amp	4.0 Amp	4.0 Amp	** Amp
Rated Power	400 Watt	900 Watt	900 Watt	** Watt
Power cord	10 Amps / 3 meter			
Outside dimension with castor	700 (W) x 881(D) x 2024 (H)	1200 (W) x 881 (D) x 2024 (H)	1400 (W) x 881(D) x 2024 (H)	700 (W) x 881(D) x 2024 (H)
Inside dimension	596 (W) x 700 (D) x 1505 (H)	1076 (W) x 690 (D) x 1495 (H)	1296 (W) x 700 (D) x 1505 (H)	Chiller section:596 (W) x 700 (D) x 692 (H) Freezer section:596 (W) x 700 (D) x 692 (H)
Insulation foam blowing agent	Cyclopentane			
Refrigeration system	Forced Air Circulation			
Defrost system	Heater Defrost			
Refrigerant	R-290			
Temperature control	Electronic controller			
Defrost control	By Electronic (temperature) controller			
Electric circuit protection	Non resettable fuse (Glass Fuse)			
Operating condition	Ambient temperature 10 to 43°C Voltage range rated voltage ±6%			
Shelf	4 nos of shelves	8 nos of shelves		
Cabinet Lamp	LED 1 Nos., 2W	LED 2 Nos., 2W		

KW COMMERCIAL KITCHEN
Distributed by KW Commercial Kitchen | 1300 001 366
www.kwcommercial.com.au | sales@kwcommercial.com.au

4. SPECIFICATIONS:

Model	HRFWE127		HRFWE127-LD	
	REFRIGERATOR SECTION	FREEZER SECTION	REFRIGERATOR SECTION	FREEZER SECTION
Power Supply	Single phase, 230V AC, 50Hz			
Rated Current	** Amp	** Amp	** Amp	** Amp
Rated Power	*** Watt	*** Watt	*** Watt	*** Watt
Power cord	10 Amps / 3 meter			
Outside dimension with castor	1200 (W) x 881 (D) x 2024 (H)		1200 (W) X 881 (D) x 2024 (H)	
Inside dimension	494 (W) x 690 (D) x 1495 (H)	494 (W) x 690 (D) x 1495 (H)	494 (W) x 690 (D) x 1495 (H)	494 (W) x 690 (D) x 1495 (H)
Insulation foam blowing agent	Cyclopentane			
Refrigeration system	Forced Air Circulation			
Defrost system	Refrigerator: In Compressor Off cycle defrost. Freezer: Heater defrost			
Refrigerant	R-290 for Chiller & Freezer Section			
Temperature control	Electronic controller			
Defrost control	By temperature controller			
Electric circuit protection	Non resettable fuse (Glass Fuse)			
Operating condition	Ambient temperature : ******°C Voltage range rated voltage ±6%			
Shelf	8 Nos of shelves			
Cabinet Lamp (Applicable to LS4 version)	LED 2 nos., 2W			

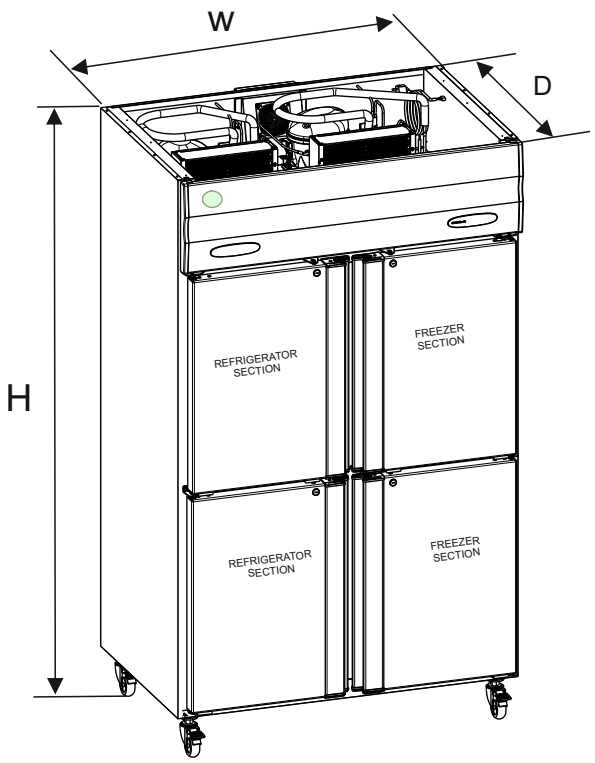

Fig. 10

HALF DOOR VERSION

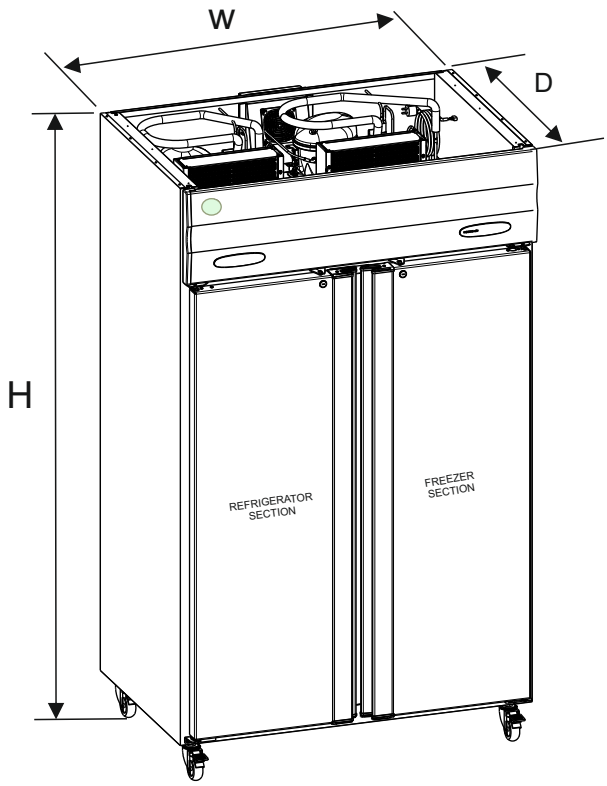

Fig. 11

LONG DOOR VERSION

KW COMMERCIAL KITCHEN
Distributed by KW Commercial Kitchen | 1300 001 366
www.kwcommercial.com.au | sales@kwcommercial.com.au

PRODUCT OUTSIDE DIMENSIONS IN MM (WITH 124 MM CASTORS):

HALF DOOR MODELS:

HRWE77LS4	700 (W) x 881 (D) x 2024 (H)
HRWE127LS4	1200 (W) x 881 (D) x 2024 (H)
HRWE147LS4	1400 (W) x 881 (D) x 2024 (H)
HFWE77LS4	700 (W) x 881 (D) x 2024 (H)
HFWE127LS4	1200 (W) x 881 (D) x 2024 (H)
HFWE147LS4	1400 (W) x 881 (D) x 2024 (H)
HRFWE77LS4	700 (W) x 881 (D) x 2024 (H)
HRFWE127LS4	1200 (W) x 881 (D) x 2024 (H)
HRWE77LS4-GN	700 (W) x 881 (D) x 2024 (H)
HRWE147LS4-GN	1400 (W) x 881 (D) x 2024 (H)
HFWE77LS4-GN	700 (W) x 881 (D) x 2024 (H)
HFWE147LS4-GN	1400 (W) x 881 (D) x 2024 (H)
HRFWE77LS4-GN	700 (W) x 881 (D) x 2024 (H)

LONG DOOR MODELS:

HRWE77LS4-LD	700 (W) x 881 (D) x 2024 (H)
HRWE127LS4-LD	1200 (W) x 881 (D) x 2024 (H)
HRWE147LS4-LD	1400 (W) x 881 (D) x 2024 (H)
HFWE77LS4-LD	700 (W) x 881 (D) x 2024 (H)
HFWE127LS4-LD	1200 (W) x 881 (D) x 2024 (H)
HFWE147LS4-LD	1400 (W) x 881 (D) x 2024 (H)
HRFWE127LS4-LD	1200 (W) x 881 (D) x 2024 (H)
HRWE77LS4-LDGN	700 (W) x 881 (D) x 2024 (H)
HRWE147LS4-LDGN	1400 (W) x 881 (D) x 2024 (H)
HFWE77LS4-LDGN	700 (W) x 881 (D) x 2024 (H)
HFWE147LS4-LDGN	1400 (W) x 881 (D) x 2024 (H)
HRFWE77LS4-LDGN	700 (W) x 881 (D) x 2024 (H)

LONG GLASS MODELS:

HRWE77LS4-LG	700 (W) x 881 (D) x 2024 (H)
HRWE127LS4-LG	1200 (W) x 881 (D) x 2024 (H)
HRWE77LS4-LGGN	700 (W) x 881 (D) x 2024 (H)

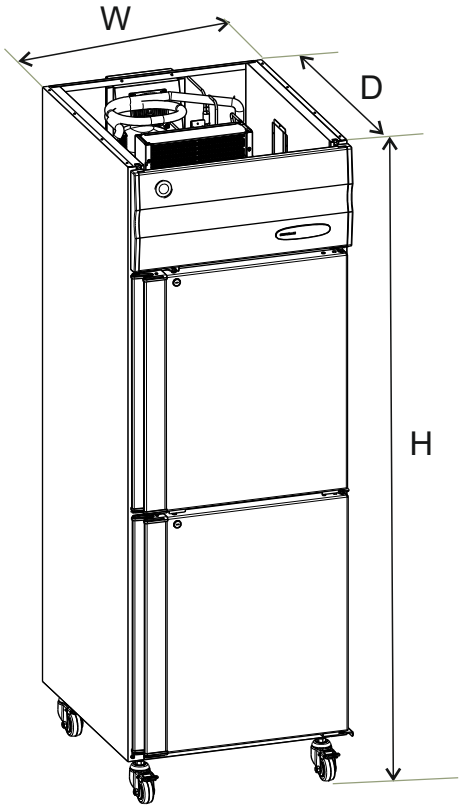

Fig. 12

5. ACCESSORIES

Width	700mm	1200/1400mm
a) Shelf:	4	8
b) Shelf Clip:	16	32

Note: Customized products may have different numbers of accessories.

6. LOCATION

IMPORTANT

This appliance is suitable for use only in climatic class 5 i.e. At 40°C and 40% RH

For best operating results:

* The refrigerator/freezer should not be located next to ovens, grills or other high heat producing equipment.
* The location should provide a firm foundation for the equipment.

KW COMMERCIAL KITCHEN
Distributed by KW Commercial Kitchen | 1300 001 366
www.kwcommercial.com.au | sales@kwcommercial.com.au

∗ Avoid a site where dripping is not allowed. Especially, a side-by-side or back-to-back installation (possibly with other manufacturer's unit) may cause condensation between the two units, resulting in dripping onto the floor.

∗ Do not expose the unit to direct sunlight or higher temperatures.

∗ Allow at least 120 cm clearance at the front of the unit for smooth door operation. Also allow at least 30 cm clearance from the ceiling to the top of the unit for proper air circulation.

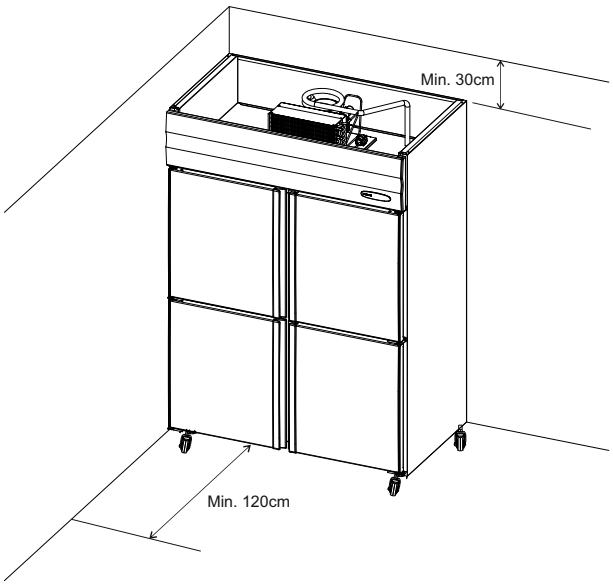

Fig.13

7. SET UP

IMPORTANT

1. Do not tilt the unit while removing pallet
2. Carry the unit by holding its bottom.

3) Cut the vinyl shipping strip and remove the carton.

4) Take out the accessory shelves and shelf clips. Attach the four shelf clips horizontally to the shelf posts. Place the shelf on the shelf clips.

5) Remove the bolts from the bottom of the unit.

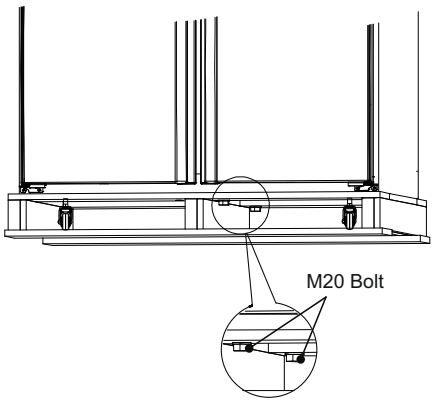

Fig. 14

6) Pull up the unit to separate from pallet.
7) Take out the pallet and rest the unit on floor

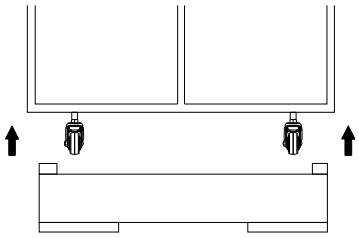

Fig. 15

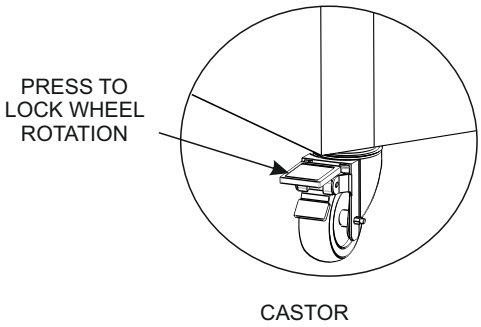

Fig. 16

8) Attach the four shelf clips horizontally to the shelf posts. Place the shelf on the shelf clips.

KW COMMERCIAL KITCHEN
Distributed by KW Commercial Kitchen | 1300 001 366
www.kwcommercial.com.au | sales@kwcommercial.com.au

8. DRAIN PAN

IMPORTANT

1. The drain pan is at rear side of the body
2. Drain pan surface is hot, do not touch it

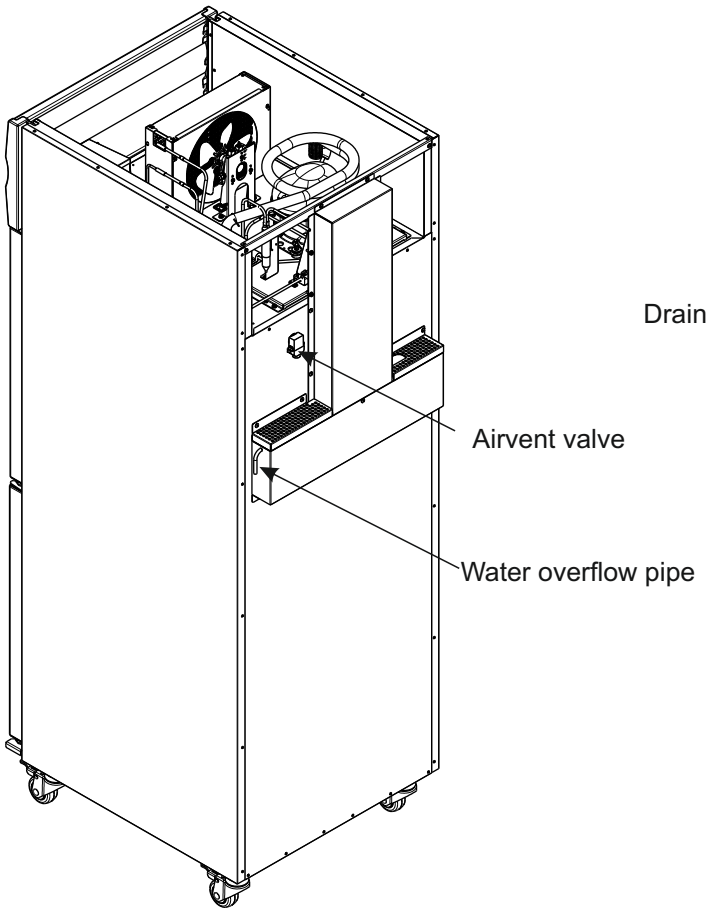

Fig. 17

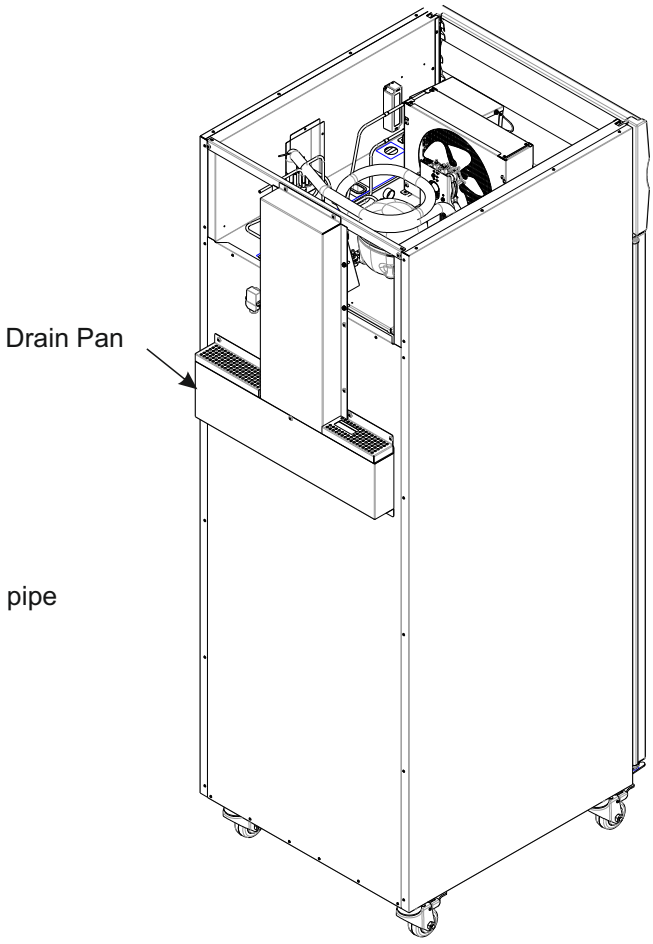

Fig. 18

KW COMMERCIAL KITCHEN
Distributed by KW Commercial Kitchen | 1300 001 366
www.kwcommercial.com.au | sales@kwcommercial.com.au

CAUTION

Do not move the unit in fully loaded condition. It may cause human fatigue.

Front caster must be locked while unit is in use. And can be unlocked while moving.

* Remove the protective plastic film from the doors and front canopy panel.

9. SHELF AND SHELF CLIP

✶ The shelf is adjustable in 1.27 cm increments. Adjust the shelf clips according to the height of stored items.

✶ To attach the shelf clip, insert the upper tab into an adjust hole in the shelf post to hook the shelf clip, and push the lower tab into another adjust hole until it locks in place. To detach the shelf clip, reverse the above procedure.

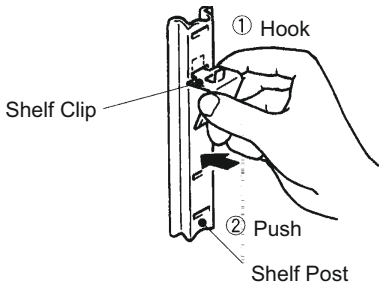

Fig. 19

CAUTION

Attach the shelf clips properly to make the shelf level.

8. ELECTRICAL CONNECTIONS

IMPORTANT

This appliance has no power switch, earth leakage circuit breaker or overcurrent protection. Install an earth leakage circuit breaker with overload protection rated at least 10A on the main power supply.

This is equipped with 10A supply cord.

✶ This Appliance must be plugged into the separated power receptacle which is readily accessible and has enough capacity. The maximum allowable voltage variation should not exceed ± 6 percent of the nameplate rating. See the nameplate.

✶ If the supply cord and the plug should need to be replaced, it should only be done by a qualified service engineer to avoid any danger.

✶ Ensure proper earthing provided. ⏚

KW COMMERCIAL KITCHEN
Distributed by KW Commercial Kitchen | 1300 001 366
www.kwcommercial.com.au | sales@kwcommercial.com.au

ELECTRICAL WIRING DIAGRAM

THIS WIRING DIAGRAM IS APPLICABLE FOR HRWE77 Series Models

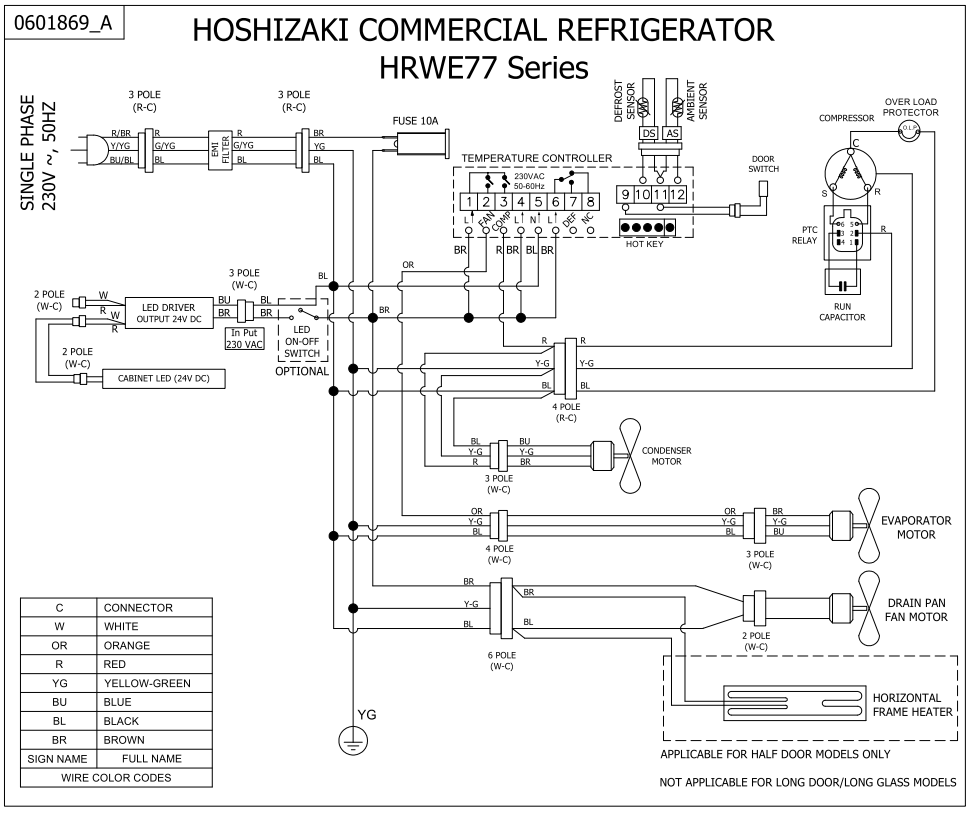

C	CONNECTOR
W	WHITE
OR	ORANGE
R	RED
YG	YELLOW-GREEN
BU	BLUE
BL	BLACK
BR	BROWN
SIGN NAME	FULL NAME
WIRE COLOR CODES	

THIS WIRING DIAGRAM IS APPLICABLE FOR HRWE127/147 Series Models

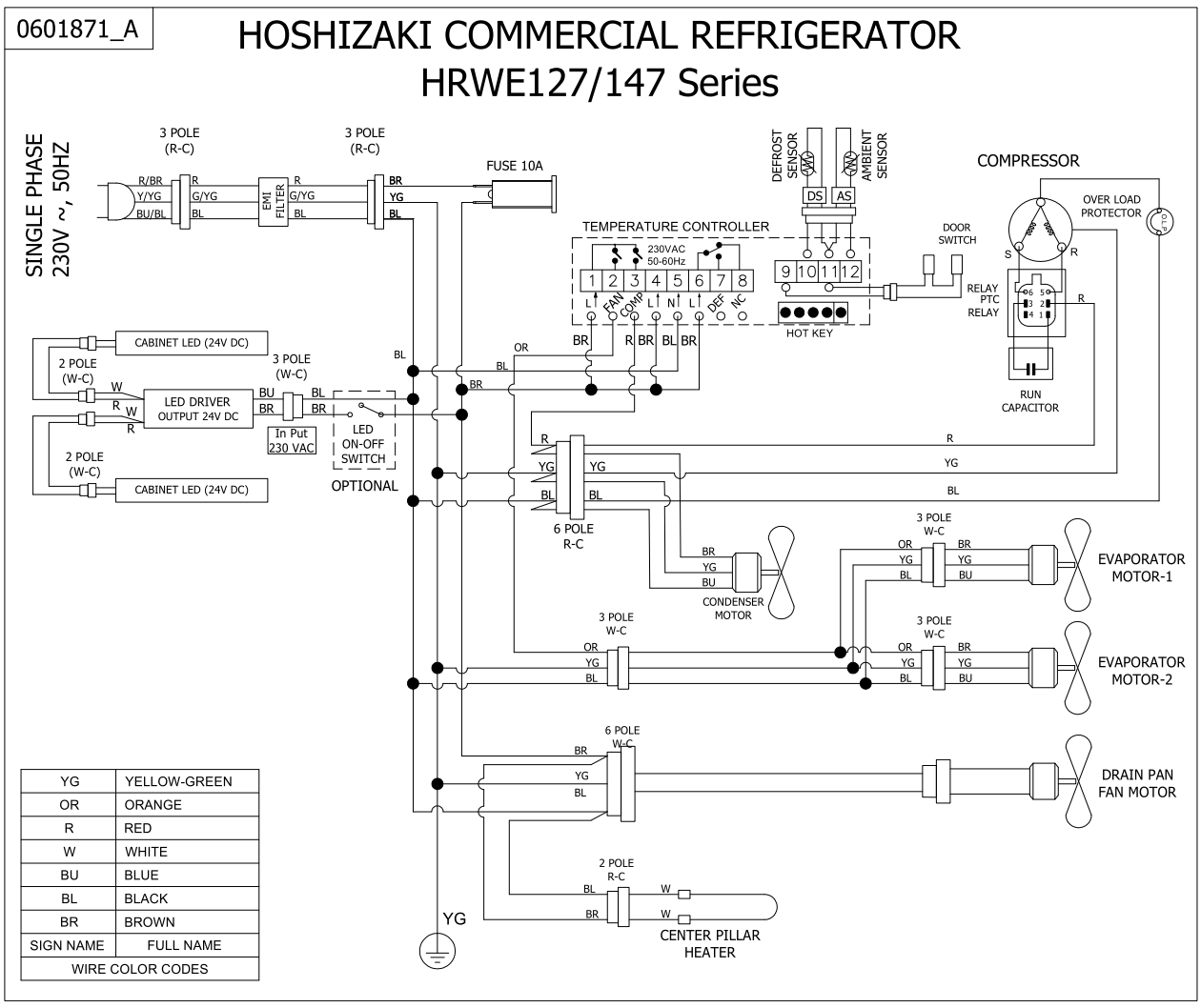

YG	YELLOW-GREEN
OR	ORANGE
R	RED
W	WHITE
BU	BLUE
BL	BLACK
BR	BROWN
SIGN NAME	FULL NAME
WIRE COLOR CODES	

KW COMMERCIAL KITCHEN
Distributed by KW Commercial Kitchen | 1300 001 366
www.kwcommercial.com.au | sales@kwcommercial.com.au

ENGLISH

ELECTRICAL WIRING DIAGRAM

THIS WIRING DIAGRAM IS APPLICABLE FOR HFWE77 Series

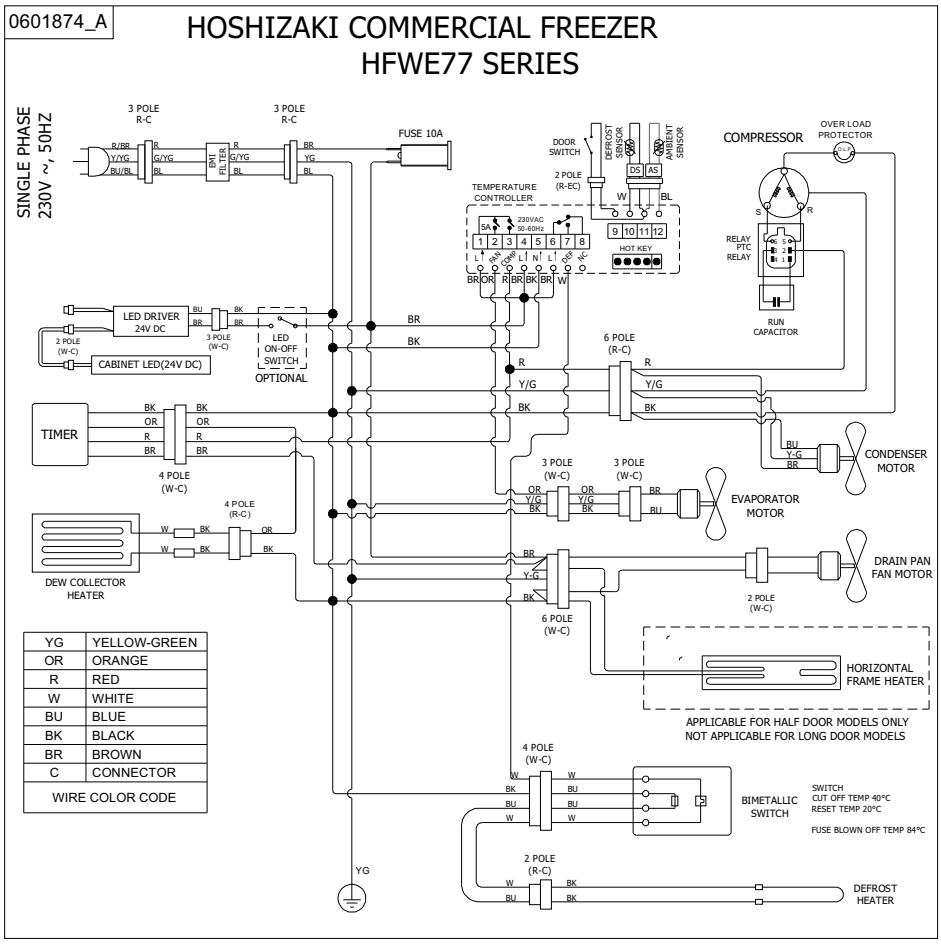

THIS WIRING DIAGRAM IS APPLICABLE FOR HFWE127/147 Series

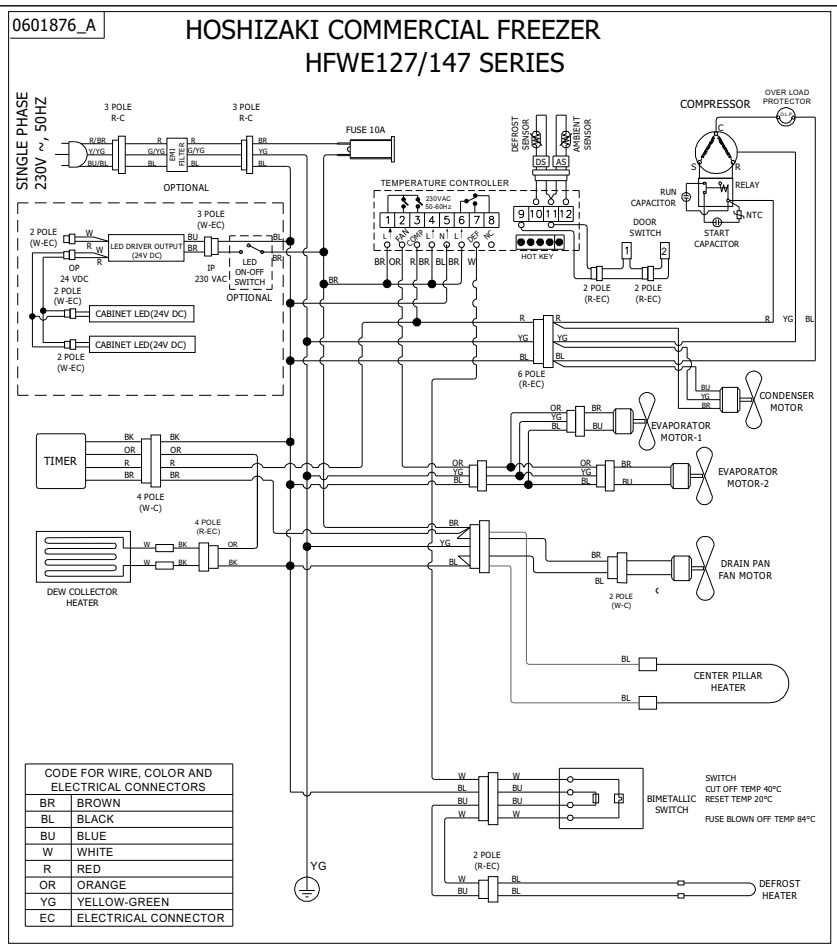

KW COMMERCIAL KITCHEN
Distributed by KW Commercial Kitchen | 1300 001 366
www.kwcommercial.com.au | sales@kwcommercial.com.au

ENGLISH

ELECTRICAL WIRING DIAGRAM

THIS WIRING DIAGRAM IS APPLICABLE FOR HRFWE77 Series

KW COMMERCIAL KITCHEN
Distributed by KW Commercial Kitchen | 1300 001 366
www.kwcommercial.com.au | sales@kwcommercial.com.au

ENGLISH

ELECTRICAL WIRING DIAGRAM

THIS WIRING DIAGRAM IS APPLICABLE FOR HRFWE127 Series

KW COMMERCIAL KITCHEN
Distributed by KW Commercial Kitchen | 1300 001 366
www.kwcommercial.com.au | sales@kwcommercial.com.au

II. OPERATING INSTRUCTIONS

IMPORTANT

1.Use the appliance only at the specified voltage. (As specified in the name plate).

2. Use standard socket. Do not use multi-socket.

3.Be careful not to wet the machine compartment. This might cause failure or electric shock hazard.

4. To prevent electric shock, do not touch the attachment plug with wet hands.

5. Do not store any explosive substances such as Aerosol with a flammable propellant, in this appliance.

6. This appliance is designed only for temporary storage of foods. Use for any other purposes (e.g. storage of chemicals or medical supplies such as vaccine and serum) could cause deterioration of stored items.

7. Do not throw anything onto the shelves or load more than 20 kg on each of them. They may fall off and cause injury.

8. Do not store bottles or cans near the air outlet. They may freeze up and break, causing a risk of injury.

9. Do not use combustible spray or place volatile and flammable substances near the unit. They could catch fire from a spark of a switch or the like.

10. Do not put anything into the machine compartment or the air inlet/outlet. The fan rotating rapidly inside may cause injury or heat.

11. Energies the appliance for 1 hour and check for proper temperature before putting foods in the cabinet.

12. Do not block the air inlet/outlet with foods.

13. Do not pack the cabinet with foods. Allow some space between them to ensure a good air flow.

14. Do not put in warm or hot foods. Let them cool first, or they will raise the cabinet temperature and could deteriorate other foods in the cabinet or overload the refrigerator/freezer.

15. Make sure all items are snug on each shelf.

16. Moist or fresh foods and those with a strong smell like seafood should be wrapped up in a plastic film or packed in a container. Otherwise the foods may dry up or give their smells to other foods.

17. Foods containing acetic acid or yeast should be wrapped up in a plastic film. Otherwise they may accelerate corrosion of the evaporator and copper tubes, resulting in failure.

18. Foods intended for direct human consumption should be stored on the shelf in a proper container and protected from direct contact with the cabinet walls.

19. Do not use the freezer to freeze foods. It is designed only to store frozen foods.

20. To use freezer for ice cream set temperature must be above -20°C

21. The doors may become difficult to open just after closed because of the negative pressure created inside the cabinet. Wait for about 30 seconds.

22. If machines are used and then kept unused for long duration, then faults may arise in the machine i.e. oxidation, gas leak, motor jam etc. which are not in the scope of in-warranty as this is due to the improper storage and wrong usage.

23. Machines installed in coastal belt, around sea front area require regular PM, otherwise oxidation related faults may arise due to extremely high salt & humidity in the environment in such areas, which are also not in the scope of warranty coverage.

KW COMMERCIAL KITCHEN
Distributed by KW Commercial Kitchen | 1300 001 366
www.kwcommercial.com.au | sales@kwcommercial.com.au

ENGLISH

1. START UP

1) Plug in the unit.

2) The compressor and condenser fan motor will start in 3 minutes.

2. FRONT PANEL

To open and close the front canopy panel:

Pull each side of the front panel toward you to release it from the grip on each side of the bottom, and swing up the front panel as shown.

To close the front panel, fit both sides of the bottom securely in the grips.

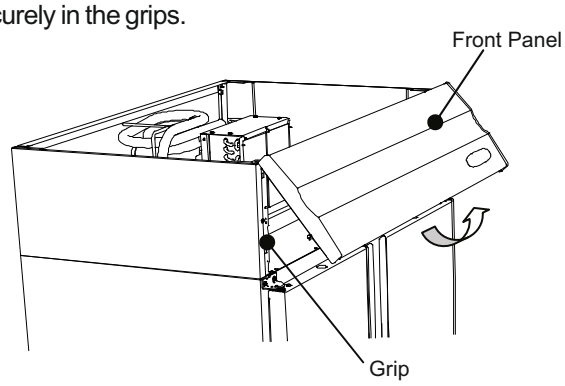

Fig. 20

To remove the front canopy panel:

Release both sides of the bottom from the grips, and lift it off vertically

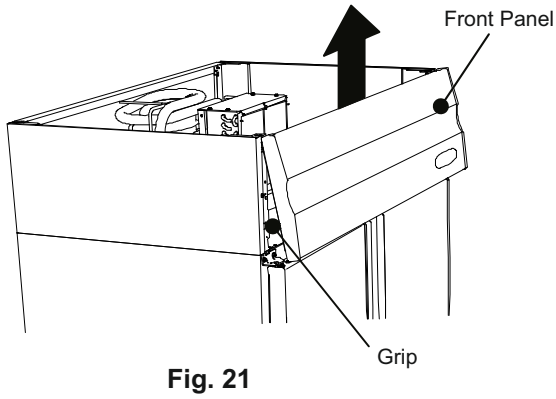

Fig. 21

3. CABINET TEMPERATURE SETTING

IMPORTANT

The temperature range given below is only the adjustable range. The actual cabinet temperature depends on the ambient temperature and other conditions.

IMPORTANT

The displayed cabinet temperature is adjusted to be almost equal to the temperature at the center of the cabinet without foods. But it can be different from the actual temperature depending on arrangement of stored foods, frequency of door opening or measuring points.

The cabinet temperature is factory-adjusted to 2°C for the refrigerator and -20°C for the freezer & Combi. If necessary, readjust the temperature as follows.

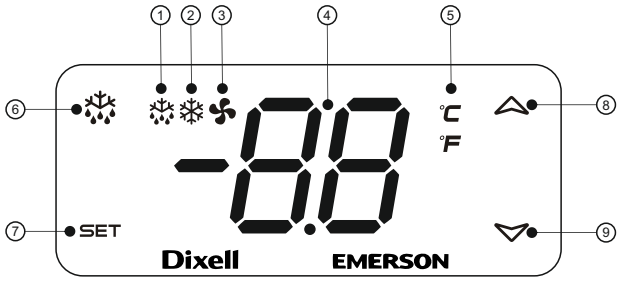

1. Defrost Indicator
2. Compressor Indicator
3. Fan Indicator
4. Screen
5. Measurement Unit Display
6. Defrost Key
7. Set Key
8. Up Key
9. Down Key

Fig. 22

1. Push the SET key for more than 2 seconds to change the Set point value;

2. The value of the set point will be displayed and the "°C" LED starts blinking;

3. To change the Set value push the up or down arrows within 10s.

4. To memorise the new set point value push the SET key again or wait 10s.

Function	Set range	Default	Unit
Temperature Setting HFWE	-7 to -25	-20	°C
Temperature Setting HRFWE (FREEZER SECTION)	-16 to -23	-20	°C
Temperature Setting HRWE /HRFWE(CHILLER SECTION)	-2 to +12	+2	°C

KW COMMERCIAL KITCHEN
Distributed by KW Commercial Kitchen | 1300 001 366
www.kwcommercial.com.au | sales@kwcommercial.com.au

HRWE / HFWE / HRFWE (Common)

The compressor stops when the cabinet temperature reaches down to the set temperature or minimum compressor ON time whichever comes later, and starts when the cabinet temperature rises to the set temperature + differential or minimum compressor OFF time whichever comes later.
The average cabinet temperature will be around the set temperature.
Refer temperature controller setting sheet of respective model for actual differential value.

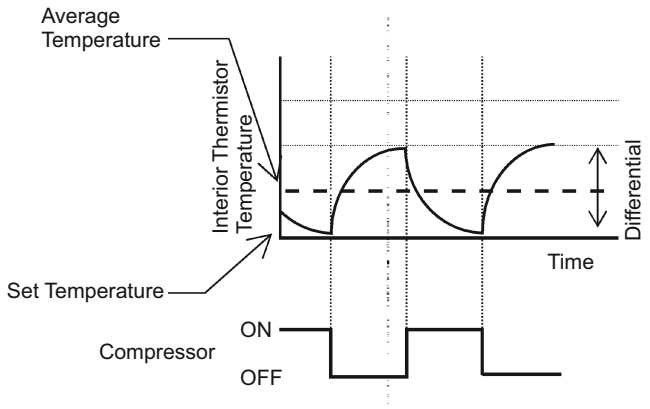

Fig. 23

4. DEFROST

Automatic defrost cycle

Freezer:
The automatically defrost the evaporator after 5 hours from previous defrost or from refrigeration start or based on auto defrost start temperature. the defrost indication will turn on and display the message "dF"

Refrigerator:
The automatically defrost the evaporator after 4 hours from previous defrost or from refrigeration start. the defrost indication will turn on and display the message "dF" alternating with the temperature measured by control probe..

Manual defrost cycle
Push the defrost ❄ key for more than 2 seconds and a manual defrost will start. The defrost indicator will turn on and display the message “dF”.

5. INDICATOR LIGHTS

Indicator	Symbol	Status	Function
Compressor	❄	On	Compressor running
		Off	Compressor off
		Flashing	Compressor start delay
Evaporator fan		On	Evaporator fan running
		OFF	Evaporator fan off
		Flashing	Evaporator fan start delay
Defrost		On	Defrosting
		Off	Defrost stopped
Temperature	°C	On	Measurement Unit
		Flashing	Programming mode

6. SHUT DOWN

IMPORTANT

1) Before shutting down the unit, move the stored foods into another storage refrigerator/freezer.

2) Unplug the unit or disconnect the main power supply.

3)When preparing the unit for long storage, clean the cabinet interior and door gaskets, dry them thoroughly and store the unit in a dry place.

III. SERVICING OF APPLIANCE

1.Disconnect the Appliance from power source during servicing & when replacing parts.
2. For good performance of cabinet, clean the condenser once in a month.
3. Clean the dust from condenser by means of soft wire brush, blower or vacuum cleaner.
Note: Do not use water for cleaning condenser.
4. Do not touch or wet the machine compartment parts. This could result in failure or breakdown.
5.To prevent possible damage, do not clean the plastic parts with water above 40°C

1. INTERIOR, EXTERIOR, SHELF

✶ Disconnect the appliance from power source before cleaning.

✶ Clean the interior and exterior at least once a week for sanitation.

✶ Clean off the interior and exterior with a soft cloth soaked in cold or warm water containing the proper amount of neutral cleaner and wrung dry. Do not use a water jet to clean the machine compartment.

✶ Chemical agents other than neutral cleaner might cause damage to the interior and exterior surfaces.

KW COMMERCIAL KITCHEN
Distributed by KW Commercial Kitchen | 1300 001 366
www.kwcommercial.com.au | sales@kwcommercial.com.au

✶ Any remaining detergent will damage metal or plastic surfaces. Use a soft cloth dampened with warm water to wipe it off.

✶ Do not use the following items. They could damage painted or plastic surfaces:

Polishing powder, alcohol, thinner, benzine, acidic or alkaline detergent, hot water, petroleum, soap powder, metal scourer or brush, etc. Especially detergent to clean grease on ventilator or microwave.

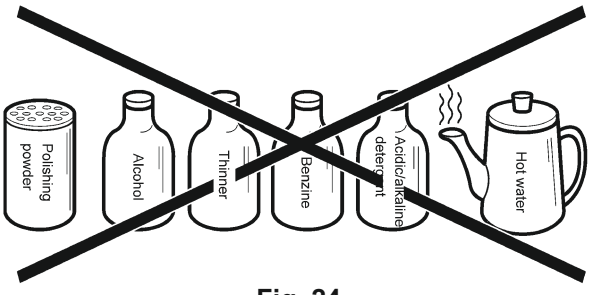

Fig. 24

Note: Some solutions other than the above may also damage painted or plastic surfaces. Immediately stop using such solutions if they cause any problems.

✶ The door gasket and its contact surface get soiled easily. Clean every surface of these parts thoroughly. Remnants of food will accelerate aging.

✶ Use a cloth to wipe off any water staying inside the cabinet.

2. BEFORE CALLING A SERVICE AGENT

IMPORTANT

1. If the screen on the operation panel indicates an error code or something seems wrong with the unit, check for possible causes according to the following instructions. If the problem still exists, immediately contact an authorized HOSHIZAKI service company.

2. When contacting a service company, let them know the model name, serial number, date of installation (see warranty card) and state of the trouble.

3. Do not attempt to repair the unit yourself.

Code	Possible Cause	Operation and Remedy
P1	Cabinet sensor error	Compressor will follow cycle of 20min on and 10min off. Press any key to stop beep. When troubleshooting is over, system recalculates compressor delay time. Immediately contact an authorized HOSHIZAKI service company.
P2	Defrost sensor Error	Defrost termination temperature is invalid. Press any key to stop beep. Immediately contact an authorized HOSHIZAKI service company.

* The code "dF" is not an error code but indicates the unit is in defrost cycle.

[b] TROUBLES WITHOUT ERROR CODE INDICATION

1) Unit fails to operate:
(1) Unplugged.
(2) Power failure.
(3) Main power supply disconnected.
(4) Switch off from controller.

2) Poor cooling performance:
(1) Ambient temperature too high (above 43°C).
(2) Door(s) opened too often.
(3) Cabinet temperature setting too high.
(4) Too packed with foods.
(5) Air circulation path blocked.
(5) Door(s) left open.

3) Condensation around door(s):
(1) Ambient humidity too high.
(2) Door(s) not closed properly.

4) Noise:
(1) Normal operating sounds of compressor or condenser fan.

5) Frosting inside compartment:
(1) Ambient humidity too high.
(2) Door(s) opened too often.
(3) Door(s) not closed properly.
(4) Too packed with foods beyond load line.

KW COMMERCIAL KITCHEN
Distributed by KW Commercial Kitchen | 1300 001 366
www.kwcommercial.com.au | sales@kwcommercial.com.au

3. DISPOSAL

This marking indicated that this product should not be Disposed with other household wastes throughout the European union. To prevent possible harm to the environment or human health from uncontrolled waste disposal, recycle it responsibly to promote the Sustainable reuse of material resources. To return your used device, please use the return and collection systems or contact the retailer where the product was purchased. They can take this product for environmental safe recycling.

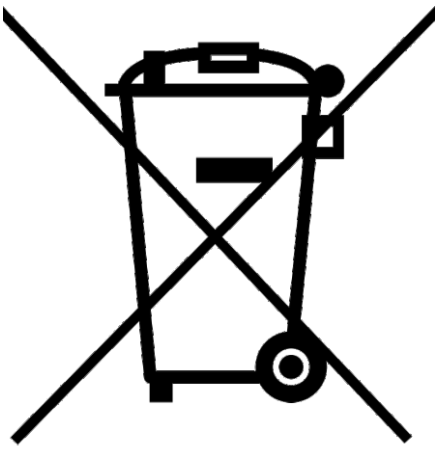

IMPORTANT

The insulation foaming agent used for the unit body contains flammable gas cyclopentane. With this in mind, dispose of the properly.

4. WARRANTY

HOSHIZAKI warrants to the original owner/user that all HOSHIZAKI branded products shall be free of defects in material and/or workmanship for the duration of the "warranty period". The warranty shall be effective for one year from the date of installation.

HOSHIZAKI's liability under the terms of the warranty are limited and shall exclude routine servicing, cleaning, essential maintenance and/or repairs occasioned by misuse and installations not in accordance with HOSHIZAKI guidelines.

Warranty repairs should be completed by an approved HOSHIZAKI dealer or service agency using genuine HOSHIZAKI components.

To obtain full details of your warranty and approved service agency, please contact your dealer/supplier, or contact on toll free number 1300 551 361

HEAD OFFICE:
Office Premises 501, 502, 503, 504, 505,
5th Floor, Ascot Centre, Sahar Road,
Next to Hotel Hilton, Andheri (East),
Mumbai – 400 099.
E-mail: service@westernequipments.com

MANUFACTURING ADDRESS :
WESTERN REFRIGERATION PVT. LTD.
Survey. No. 635/726/732/748/752/762,
Village - Tadgam, Taluka - Umbergaon,
District - Valsad, (Gujarat)
PIN Code - 396135, INDIA

WESTERN REFRIGERATION PVT. LTD.
Paikee 1,49/3, Vankas,
Survey No.19/5,21/1,22/2,
Village - Tumb, Taluka - Umbergaon,
District - Valsad (Gujarat)
PIN Code - 396150, INDIA

WESTERN REFRIGERATION PVT. LTD.
Plot No. 288, At Old Agra Road,
Village Lahe, Atgaon, Taluka - Shahapur,
District - Thane (Maharashtra)
PIN Code - 421603, INDIA

DRAWING NUMBER: 1001545-B
REVISION DATE: 21.10.2024
PPS: 64-PPS-IM
MANUAL SIZE: Size: 204 Width X 280 Length (± 5mm)

PDF COPY OF THIS MANUAL CAN BE PROVIDED ON REQUEST.

KW COMMERCIAL KITCHEN
Distributed by KW Commercial Kitchen | 1300 001 366
www.kwcommercial.com.au | sales@kwcommercial.com.au