PRODUCT DOCUMENT PACK

Prepared and distributed by KW Commercial Kitchen

PRODUCT

Waldorf CH8600ED-LS 600mm Electric Chargrill - Leg Stand

Model / SKU: CH8600ED-LS

KW COMMERCIAL KITCHEN

7/72 Canterbury Road, Bankstown NSW 2200

Phone 1300 001 366

Email sales@kwcommercial.com.au

Web www.kwcommercial.com.au

Scan for the current KW product page

DOCUMENT NOTICE

The supplier document begins on the next page. KW contact branding is added in a separate footer area and does not replace the supplier's instructions, specifications or warranty terms.

Official supplier source: https://moffat.global.ssl.fastly.net/sites/default/files/products/manual/249141-8.pdf

Waldorf®
800 SERIES

Installation and Operation Manual

Electric Chargrill

CH8600ED
CH8900ED

Date Purchased

Serial Number

Dealer

Service Provider

For use in GB & IE

249141-8

KW COMMERCIAL KITCHEN
Distributed by KW Commercial Kitchen | 1300 001 366
www.kwcommercial.com.au | sales@kwcommercial.com.au

MANUFACTURED BY

Moffat Limited
Rolleston 7675
New Zealand

INTERNATIONAL CONTACTS

AUSTRALIA

Moffat Pty Limited

Web:	www.moffat.com.au
E.Mail:	vsales@moffat.com.au
Main Office:	(tel) +61 (03) 9518 3888
	(fax) +61 (03) 9518 3833
Service:	(tel): 1800 622 216
Spares:	(tel): 1800 337 963
Customer Service:	(tel): 1800 335 315
	(fax): 1800 350 281

CANADA

Serve Canada

Web:	www.servecanada.com
E.Mail:	info@servecanada.com
Sales:	(tel): 800 551 8795 (Toll Free)
Service:	(tel): 800 263 1455 (Toll Free)

NEW ZEALAND

Moffat Limited

Web:	www.moffat.co.nz
E.Mail:	sales@moffat.co.nz
Main Office:	(tel): 0800 663328

UNITED KINGDOM

Blue Seal

Web:	www.blue-seal.co.uk
E.Mail:	sales@blue-seal.co.uk
Sales:	(tel): +44 121 327 5575
	(fax): +44 121 327 9711
Spares:	(tel): +44 121 322 6640
	(fax): +44 121 327 9201
Service:	(tel): +44 121 322 6644
	(fax): +44 121 327 6257

UNITED STATES

Moffat

Web:	www.moffat.com
Sales:	(tel): 1-800 551 8795 (Toll Free)
	(tel): 336 661 1556
	(fax): 336 661 9546
Service:	(tel): 866 673 7937 (Toll Free USA only)

REST OF WORLD

Moffat Limited

Web:	www.moffat.co.nz
E.Mail:	export@moffat.co.nz

The reproduction or copying of any part of this manual by any means whatsoever is strictly forbidden unless authorized previously in writing by the manufacturer.

In line with policy to continually develop and improve its products, Moffat Ltd. reserves the right to change the specifications and design without prior notice.

© Copyright Moffat Ltd. July 2026.

Contents

Waldorf Electric Chargrill

CH8600ED	**Electric Chargrill,**	**600 mm**
CH8900ED	**Electric Chargrill,**	**900 mm**

Introduction **2**

Specifications **3**
- Model Numbers Covered in this Specification
- Electrical Supply Requirements
- Electrical Connection

Dimensions **4**

Installation **7**
- Installation Requirements
- Unpacking
- Location
- Clearances
- Assembly
- Electrical Connection
- Commissioning

Operation **10**
- Operation Guide
- Description of Controls

Cleaning and Maintenance **13**
- General
- After Each Use
- Daily Cleaning

Fault Finding **14**

Circuit Schematics **15**

Wiring Diagrams **17**

Replacement Parts List **19**

1 Introduction

We are confident that you will be delighted with your WALDORF ELECTRIC CHARGRILL, and it will become a most valued appliance in your commercial kitchen.
To ensure you receive the utmost benefit from your new WALDORF Appliance, there are two important things you can do.

Firstly:

Please read the instruction book carefully and follow the directions given. The time taken will be well spent.

Secondly:

If you are unsure of any aspect of the installation, instructions or performance of your appliance, contact your WALDORF dealer promptly. In many cases a phone call could answer your question.

CE Only:

These instructions are only valid if the country code appears on the appliance. If the code does not appear, refer to the supplier of this appliance to obtain the technical instructions for adapting the appliance to the conditions for use in that country.

Recognise safety information:

Safety alert symbol.
When you see this symbol in the manual or on the appliance, pay special attention to the instructions.

Read the instructions before using this appliance.

Risk of electric shock.

WARNING:

IMPROPER INSTALLATION, ADJUSTMENT, ALTERATION, SERVICE OR MAINTENANCE CAN CAUSE PROPERTY DAMAGE, INJURY OR DEATH. READ THE INSTALLATION, OPERATING AND MAINTENANCE INSTRUCTIONS THOROUGHLY BEFORE INSTALLING OR SERVICING THIS APPLIANCE.

WARNING:

GREAT CARE MUST BE TAKEN BY THE OPERATOR TO USE THE EQUIPMENT SAFELY TO GUARD IT AGAINST RISK OF FIRE.

- **THE APPLIANCE MUST NOT BE LEFT ON UNATTENDED.**
- **IT IS RECOMMENDED THAT A REGULAR INSPECTION IS MADE BY A COMPETENT SERVICEMAN TO ENSURE CORRECT AND SAFE OPERATION OF YOUR APPLIANCE IS MAINTAINED.**
- **DO NOT STORE OR USE GASOLINE OR OTHER FLAMMABLE VAPOURS OR LIQUIDS IN THE VICINITY OF THIS OR ANY OTHER APPLIANCE.**
- **DO NOT SPRAY AEROSOLS IN THE VICINITY OF THIS APPLIANCE WHILE IT IS IN OPERATION.**
- **DO NOT USE WATER JET, SPRAY, OR STEAM CLEANER TO CLEAN THIS APPLIANCE.**

CAUTION:

This appliance is;

- **Intended for commercial use only, in kitchens of restaurants, canteens, and so on. This appliance is not inteneded for use in continuous mass production of food.**
- **For professional use and is only to be used by suitably qualified / trained persons.**
- **Only qualified service persons are to carry out installation, servicing and gas conversion operations.**
- **Components having adjustments protected (e.g. paint sealed) by the manufacturer should not be adjusted by the user / operator.**
- **DO NOT operate the appliance without the legs supplied fitted.**

KW COMMERCIAL KITCHEN
Distributed by KW Commercial Kitchen | 1300 001 366
www.kwcommercial.com.au | sales@kwcommercial.com.au

Model Numbers Covered in this Specification

Model Number	Model Type	Total Power Input	Net Weight
CH[1]8600ED - B	600 mm Bench Model	8.4 kW	68 kg
CH[1]8600ED - L	600 mm Leg Stand Model	8.4 kW	68 kg
CH[1]8600ED - C	600 mm Cabinet Base and no Door	8.4 kW	70 kg
CH[1]8600ED - D	600 mm Cabinet Base with door	8.4 kW	75 kg
CH[1]8900ED - B	900 mm Bench Model	13.4 kW	93 kg
CH[1]8900ED - L	900 mm Leg Stand Model	13.4 kW	93 kg
CH[1]8900ED - C	900 mm Cabinet Base and no Door	13.4 kW	126 kg
CH[1]8900ED - D	900 mm Cabinet Base with Door	13.4 kW	131 kg

NOTE:

[1]: - Model Options;

- \- Standard.
- L - Low Back.
- B - Bold Front.
- LB - Low Back and Bold Front.

Electrical Supply Requirements

Model	Electrical Supply			Nominal Rating				
	Voltage	Power	Frequency	Power Input	Current (A)			Voltage
					L1	L2	L3	
CH8600ED	400-415 Vac	3 P+N+E	50 / 60 Hz	9.0 kW	11.6	14.7	11.6	415 Vac
	380-415 Vac	3 P+N+E	50 / 60 Hz	8.4 kW	11.4	11.5	11.4	400 Vac
CH8900ED	400-415 Vac	3 P+N+E	50 / 60 Hz	14.4 kW	14.7	23.3	23.3	415 Vac
	380-415 Vac	3 P+N+E	50 / 60 Hz	13.4 kW	14.5	22.9	22.9	400 Vac

Electrical Connection

Warning

THIS APPLIANCE MUST BE EARTHED. IF THE SUPPLY CORD IS DAMAGED, IT MUST BE REPLACED BY A SUITABLY QUALIFIED PERSON IN ORDER TO AVOID A HAZARD.

When connecting a Waldorf electric appliance to the mains supply, ensure that the following is carried out:-

- An isolating switch is fitted within 2m of the appliance, but not on the appliance and in such a position that the user does not have to reach across the cooking surface.
- Supply cord shall be oil-resistant, sheathed flexible cable and not lighter than ordinary polychloroprene or other equivalent synthetic elastomer sheathed cord (as per AS / NZS 3191 part 2.10.11. or IEC 60245-IEC-57) e.g. H05 RN-F Type.
- The branch supply line shall be individually overload protected to the correct current rating and the supply chord shall be protected against any mechanical or thermal damage.
- A grommet is fitted around the wiring entry hole into the appliance.
- All wiring connections must be tight.
- If the appliance is intended to be moved for cleaning, then it shall be installed with flexible power supply and equipotential bonding connections, such that the appliance can be moved forward not less than 1320 mm without the flexible connections becoming taut or strained.
- A residual-current device (RCD) is recommended for protection of the power supply to this appliance.

Refer to the appropriate wiring standards for the size of cable that is to be supplied to an appliance for the current drawn on that line.

KW COMMERCIAL KITCHEN
Distributed by KW Commercial Kitchen | 1300 001 366
www.kwcommercial.com.au | sales@kwcommercial.com.au

3 Dimensions

Dimensions for Bench Models

CH(L)8600ED - B

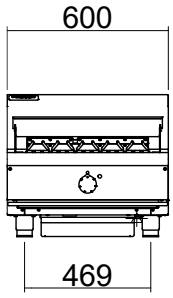

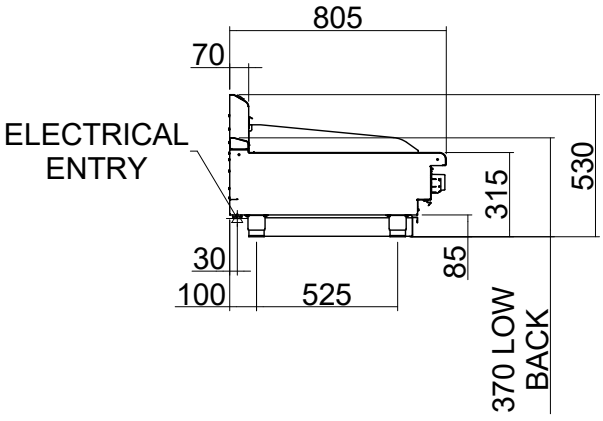

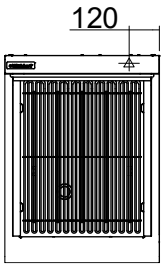

CH(L)8900ED - B

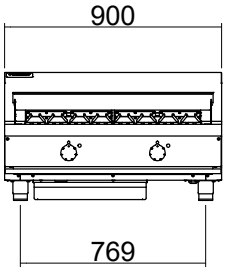

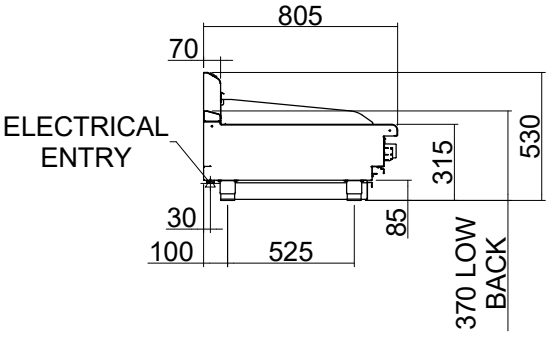

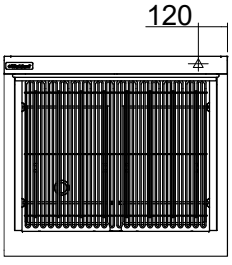

= ELECTRICAL CONNECTION POINT.

Distributed by KW Commercial Kitchen | 1300 001 366
www.kwcommercial.com.au | sales@kwcommercial.com.au

Dimensions for Leg Stand Models

(R) = Rating Plate Location for this option.

CH(L)8600ED - L

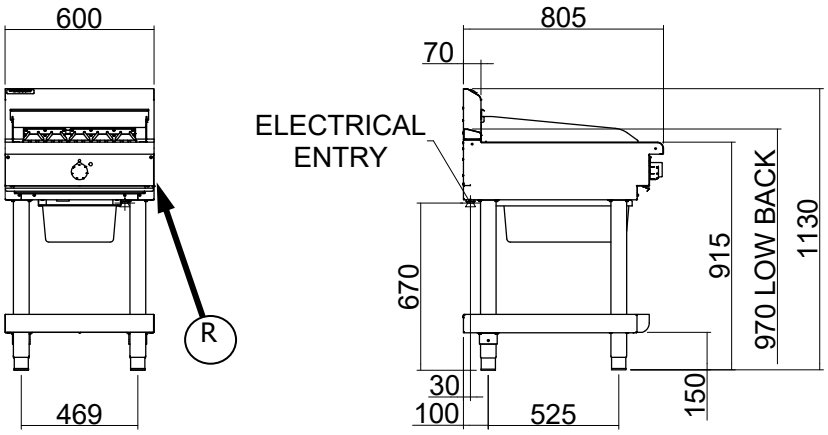

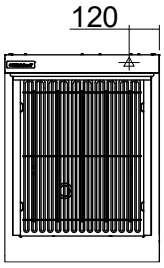

CH(L)8900ED - L

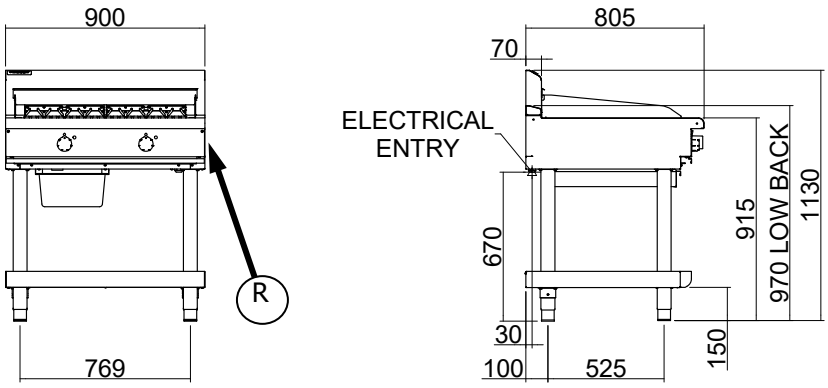

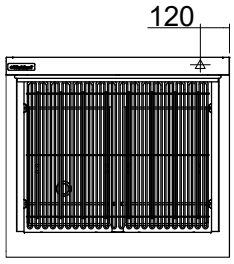

= ELECTRICAL CONNECTION POINT.

Distributed by KW Commercial Kitchen | 1300 001 366
www.kwcommercial.com.au | sales@kwcommercial.com.au

Dimensions for Cabinet Models

(R) = Rating Plate Location for this option.

CH(L)8600ED - C

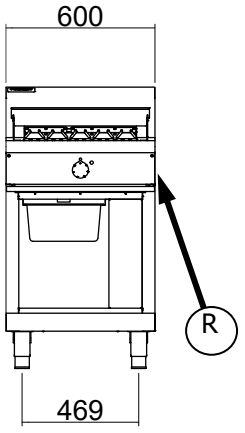

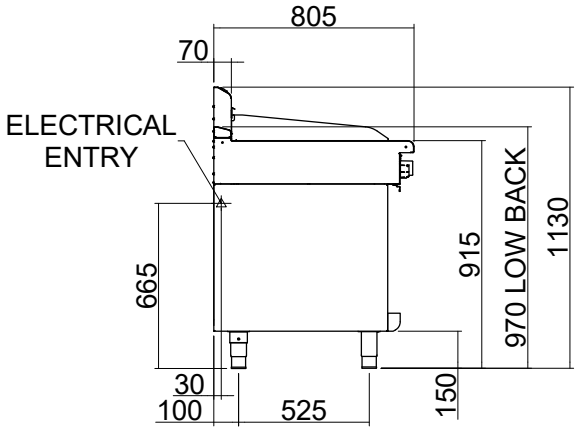

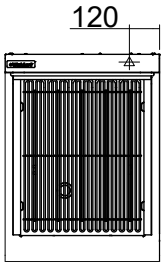

CH(L)8900ED - C

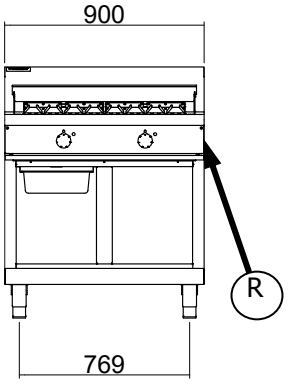

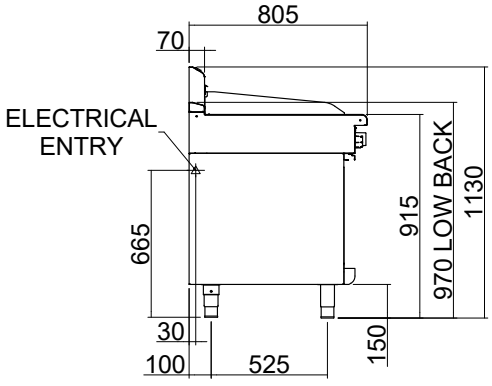

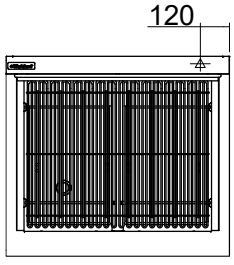

KW COMMERCIAL KITCHEN
Distributed by KW Commercial Kitchen | 1300 001 366
www.kwcommercial.com.au | sales@kwcommercial.com.au

Installation Requirements

NOTE:

- **It is most important that this appliance is installed correctly and that operation is correct before use. Installation shall comply with local electrical and health and safety requirements.**
- **This appliance shall be installed with sufficient ventilation to prevent the occurrence of unacceptable concentrations of health harmful substances in the room, the appliance is installed in.**

Waldorf Electric Chargrills are designed to provide years of satisfactory service and correct installation is essential to achieve the best performance, efficiency and trouble-free operation.
This appliance must be installed in accordance with National installation codes and in addition, in accordance with relevant National / Local codes covering electrical and fire safety.

Australia / New Zealand	AS / NZS3000	- Wiring Rules.
United Kingdom:	BS 7671	- Requirements for Electrical Installations.

Installations must be carried out by qualified persons only. Failure to install equipment to the relevant codes and manufacturer's specifications shown in this section will void the warranty.

Components having adjustments protected (e.g. paint sealed) by the manufacturer are only to be adjusted by an authorised service agent. They are not to be adjusted by the installation person.

Unpacking

- Remove all packaging and transit protection from the appliance including all protective plastic coating from the exterior stainless steel panels.
- Check equipment and parts for damage. Report any damage immediately to the carrier and distributor.
- Ensure that the 2 front adjustable feet and rear rollers are securely fitted.
- Report any deficiencies to the distributor who supplied the appliance.
- Check that the available electrical supply is correct to that shown on the rating plate (Refer to the dimension drawings for rating plate location).

Location

1. Installation must include adequate clearance and ventilation, to prevent dangerous build up of combustion products.
2. Never directly connect a ventilation system to the appliance flue outlet.
3. Position the appliance in its approximate working position.
4. The legs / castors must always be fitted to the base of the appliance.
5. Components having adjustments protected (e.g. paint sealed) by manufacturer are only to be adjusted by an authorised service agent. They are not to be adjusted by the installation person.

NOTE: Do not obstruct or block the appliances flue. Never directly connect a ventilation system to the appliance flue outlet.

Clearances

	Combustible Surface	Non Combustible Surface
Left / Right Hand Side	400mm	0mm
Rear	200mm	0mm

NOTE: This appliance should only be placed in close proximity to walls, partitions, furniture, or other surfaces if they are made of or cladded with non-combustible material.

KW COMMERCIAL KITCHEN
Distributed by KW Commercial Kitchen | 1300 001 366
www.kwcommercial.com.au | sales@kwcommercial.com.au

4 Installation

Assembly

NOTE:

- **All Models are delivered completely assembled. No further assembly is required. Refer to the information below for assembly instructions.**
- **This appliance is fitted with adjustable feet to enable the unit to be positioned securely and level. This should be carried out on completion of the electrical connection. Refer to the 'Electrical Connection' section.**

Optional Accessories (Refer to Replacement Parts List)

- Plinth Kit. For installation details, refer to the instructions supplied with each kit.

Electrical Connection

Warning

THIS APPLIANCE MUST BE EARTHED. IF THE SUPPLY CORD IS DAMAGED, IT MUST BE REPLACED BY A SUITABLY QUALIFIED PERSON IN ORDER TO AVOID A HAZARD.

NOTE: ALL ELECTRICAL CONNECTIONS MUST ONLY BE CARRIED OUT BY A QUALIFIED PERSON.

Each appliance should be connected to an adequately protected power supply and isolation switch mounted adjacent to, but not behind the appliance. This switch must be clearly marked and readily accessible in case of fire.

1. Check that the electricity supply is correct as shown on the Rating Plate. (Refer to the dimension drawings for rating plate location).
2. The supply terminal connections are located at the rear of the appliance. Refer to 'Electrical Connections' in the 'Specifications' section of the manual.
3. Remove the rear panel to allow connection access for the electrical supply.
4. Bring the supply cable up through the grommet at the back of the appliance and through the compression type gland provided on the rear of the main electrical switchgear panel.
5. Connect the mains supply to L1, L2 and L3 terminals.
6. Connect neutral and earth conductors to neutral and earth terminals respectively.
7. For all connections ensure that conductors are secure and appropriately terminated.
8. Tighten the cable gland to secure against tension on the cable.

NOTE:

- **This appliance must be grounded / earthed.**
- **Fixed wiring installations must incorporate an all-pole disconnection switch.**

9. Correctly locate the appliance into its final operating position and using a spirit level, adjust the legs so that the appliance is level and at the correct height.
10. Connect the power supply to the appliance.
11. Check that the electrical supply is as shown in 'Specifications' section of this manual.

KW COMMERCIAL KITCHEN
Distributed by KW Commercial Kitchen | 1300 001 366
www.kwcommercial.com.au | sales@kwcommercial.com.au

Commissioning

1. Before leaving the new installation;
   a. Check the following functions in accordance with the operating instructions specified in the 'Operation' section of this manual.
      - Check the current draw and loading for the equipment. Refer specification section for correct electrical requirements.
      - Check that all the connections are correct and that all cover panels have been re-fitted.
      - Check that the appliance functions in accordance with the operating instructions.
      - Ensure that this instruction manual is left with the appliance.
      - Ensure that all the relevant details and contacts have been added to the front of this manual.
   b. Ensure that the operator has been instructed in the areas of correct operation and shutdown procedure for the appliance.

2. This manual must be kept by the owner for future reference and as a record of ***Date of Purchase, Date of Installation*** and ***Serial Number of Unit*** recorded and kept with this manual. **(These details can be found on the Rating Plate**. **(Refer to the dimension drawings for rating plate location).**

NOTE:

- **If for some reason it is not possible to get the appliance to operate correctly, turn 'Off' the electrical power supply and contact a qualified service person. The supplier of this appliance will be able to recommend a suitable person.**
- **Make sure that the electrical supply is turned 'Off' before any service or maintenance work is carried out.**

KW COMMERCIAL KITCHEN
Distributed by KW Commercial Kitchen | 1300 001 366
www.kwcommercial.com.au | sales@kwcommercial.com.au

Operation Guide

Caution

- **This appliance is for professional use and is only to be used by qualified persons.**
- **Only authorised service persons are to carry out installation and servicing operations.**
- **Components having adjustments protected (e.g. paint sealed) by the manufacturer should not be adjusted by the user / operator.**

Caution

Before turning on the appliance always check that there is sufficient water in the tank; do not use the appliance with an empty tank.

Description of Controls

Electric Chargrill Controls
(Model CH8600ED-L shown)

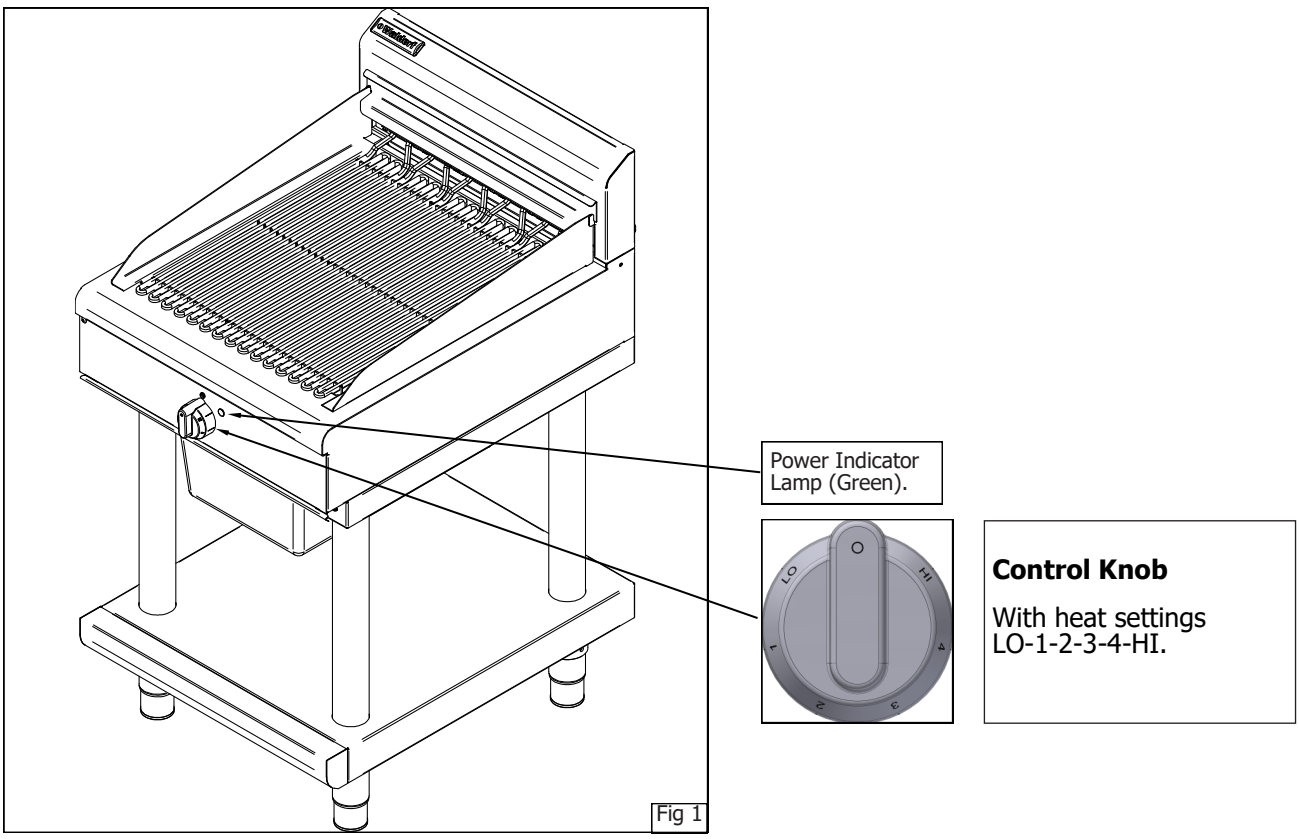

Fig 1

Chargrill Operational Guidance

For optimal cooking performance, adjust the control knob to power settings 1–4. The high setting (HI) is designated exclusively for the pyrolytic cleaning function and should not be used for cooking.

During periods of inactivity, reduce the power level to maintain element warmth. This practice conserves energy and extends the lifespan of the heating element.

When resuming cooking, restore the power level to the appropriate setting. The element will rapidly reach the required temperature.

KW COMMERCIAL KITCHEN
Distributed by KW Commercial Kitchen | 1300 001 366
www.kwcommercial.com.au | sales@kwcommercial.com.au

Operating the Electric Chargrill

Fit the Chargrill for operation

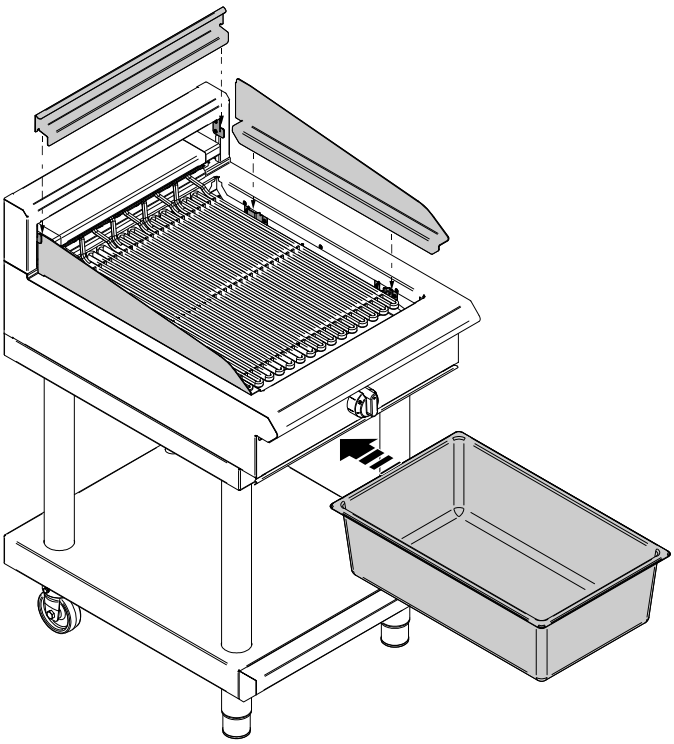

Before operation, ensure that the chargrill is fitted with the following parts:

- Left and right side splash guards.
- Rear splash guard.
- Drain pan
-

Water Bath Operation

The water bath can be refilled during service; the unit does **not** need to be switched off or cooled before topping up. Use a jug, funnel, or similar method to add water **between** the elements. Fill until water begins to overflow into the catch container below.

During a full day of operation, expect water to evaporate and require refilling **2–3 times**, depending on cooking load and operating conditions.

Surface fat may overflow into the waste container as fat floats on water. Ensure the water level is maintained throughout service to support cooking performance.

General Operation - Prior to daily operation when unit is cold

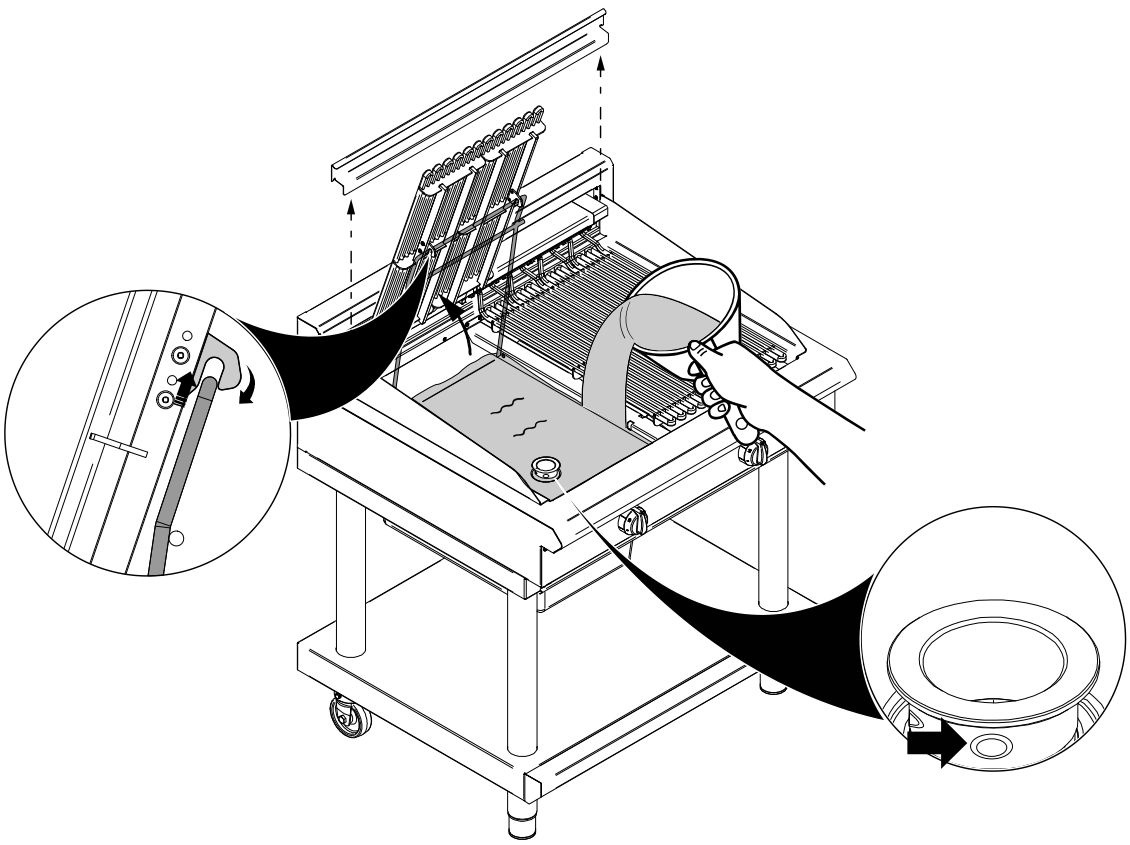

1. Ensure that the drain pan is fitted.
2. Remove the rear splash guard.
3. Raise the chargrill element and latch it in the upright position with the latching arm.
4. Pour sufficient water into the tank up to the relief holes on the drain plug.
   NOTE: Excess water drains into the drain pan.
5. Unlatch and lower the chargrill element.
6. Fit the rear splash guard back into the chargrill.
7. Turn the temperature control knob to the required setting.

KW COMMERCIAL KITCHEN
Distributed by KW Commercial Kitchen | 1300 001 366
www.kwcommercial.com.au | sales@kwcommercial.com.au

6 Cleaning and Maintenance

General

Caution

Always turn 'Off' the electrical supply before cleaning the appliance.

This appliance is not water proof.

Do not use water jet spray or steam cleaner to clean interior or exterior of this appliance.

Clean the chargrill regularly. A clean appliance looks better, will last longer and will perform better. Carbonised grease on the surface of the elements will hinder the transfer of heat from the cooking surface to the food. This will result in loss of cooking efficiency.

NOTE: Each Heavy Duty chargrill is supplied with a scraper tool for cleaning the chargrill elements.

DO NOT use water on the elements while they are still hot as warping and cracking may occur. Allow the elements to cool before cleaning.

NOTE:

- **DO NOT use strong solvents, abrasive or caustic detergents as they could corrode or damage the chargrill.**
- **To prevent rust forming on the elements, ensure that any detergent or cleaning material has been completely removed after each cleaning. The appliance should be switched 'On' briefly to ensure the elements are dry.**

KW COMMERCIAL KITCHEN
Distributed by KW Commercial Kitchen | 1300 001 366
www.kwcommercial.com.au | sales@kwcommercial.com.au

After Each Use

Caution

Never drain the tank with power turned 'ON'.
Always switch 'OFF' the chargrill before draining or re-filling the tank.

1. Remove the drain plug to empty the tank into the drain pan.

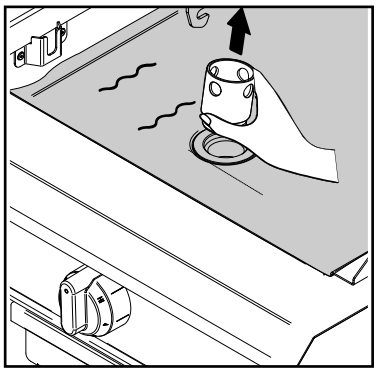

2. Carefully remove the drain pan and empty it.

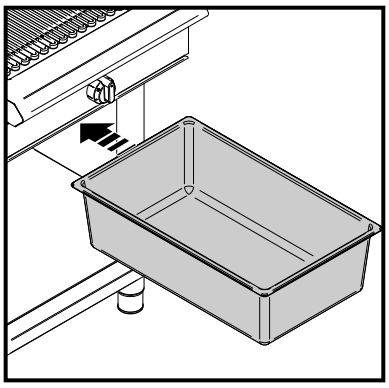

3. To assist with element cleaning, turn the control knob to the HI setting for approximately 10-15 minutes to burn-off any cooking residues.
   WARNING: Do not operate the chargrill at the HI setting for more than 15 minutes.
4. Turn the control knob to 'O' and turn 'OFF' the mains power to the chargrill.
5. Clean the elements with the supplied scraper tool to remove any food debris.
6. Empty the tank after each use.

Daily Cleaning

1. Scrape the element down with the supplied cleaning tool to remove the larger debris.
2. Turn the element to "HI" for 10 - 15 minutes to carbonise any remaining debris.
3. Turn the element off and wire brush to remove any "burnt" remnants .
4. The collection pan should be checked and emptied frequently to prevent overflow and spillage.
5. Empty the pan and wash thoroughly in the same manner as any cooking utensil.
6. Clean the Control Panel with a damp cloth lightly moistened with a solution of mild detergent and water.
7. Thoroughly clean the splash back, the interior and exterior surfaces of the chargrill with hot water, a detergent solution and a soft scrubbing brush.
8. Brush the tank surface with a soft bristled brush. Any carbon deposits should be removed by wiping with a damp cloth to prevent accumulation of food deposits.
9. Dry the chargrill thoroughly with a dry cloth and polish with a soft dry cloth.

KW COMMERCIAL KITCHEN
Distributed by KW Commercial Kitchen | 1300 001 366
www.kwcommercial.com.au | sales@kwcommercial.com.au

7 Fault Finding

This section provides an easy reference guide to the more common problems that may occur during the operation of your equipment. The fault finding guide in this section is intended to help you correct, or at least accurately diagnose problems with your equipment.

Although this section covers the most common problems reported, you may encounter a problem not covered in this section. In such instances, please contact your local authorised service agent who will make every effort to help you identify and resolve the problem. Please note that the service agent will require the following information:-

- **The Model Trade Name and Serial Number of the Appliance can be found on the Rating Plate located on the appliance. (Refer to the 'Dimensions' section).**

Fault	Possible Cause	Remedy
Element does not work when turned 'ON'.	Check for an electrical short by checking that there is NO continuity between any 'Phase In' line and the metal body of the appliance.	Call the service provider.
	Check for the item failing (element, control etc) by using a multimeter.	Call the service provider.
Complete power failure of the appliance.	Check the fuse connection at the mains supply.	Replace the blown fuse.
	Ensure that the fuse size is correct to carry the load.	Carry out a continuity and resistance check on the appliance.
	Check for an electrical short to the appliance.	Call the service provider.

NOTE: Components having adjustments protected (e.g. paint sealed) by the manufacturer, are only to be adjusted by an authorised service agent. They are not to be adjusted by an unqualified service person.

KW COMMERCIAL KITCHEN
Distributed by KW Commercial Kitchen | 1300 001 366
www.kwcommercial.com.au | sales@kwcommercial.com.au

CH8600 - 600 mm Chargrill

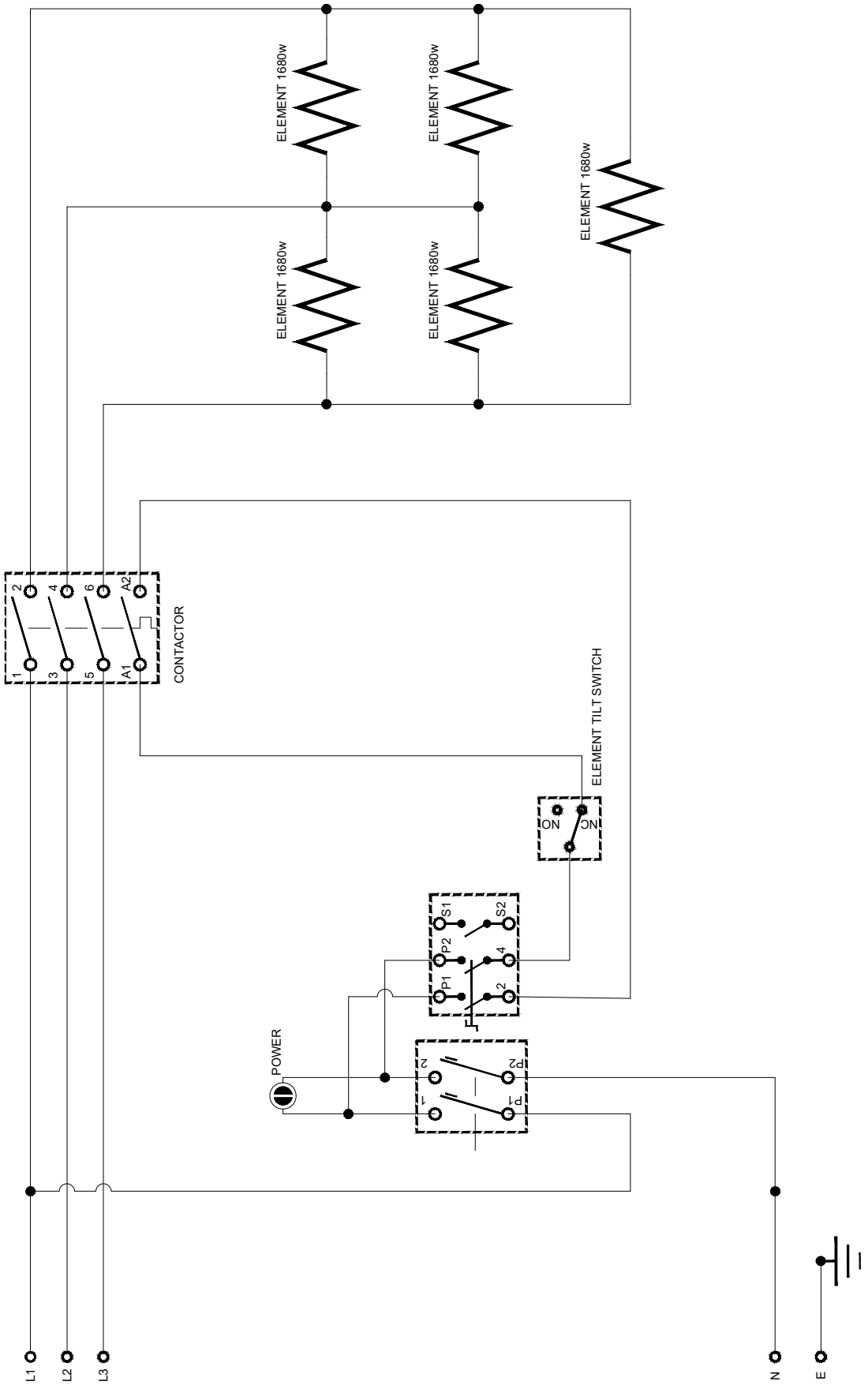

KW COMMERCIAL KITCHEN
Distributed by KW Commercial Kitchen | 1300 001 366
www.kwcommercial.com.au | sales@kwcommercial.com.au

CH8900 - 900 mm Chargrill

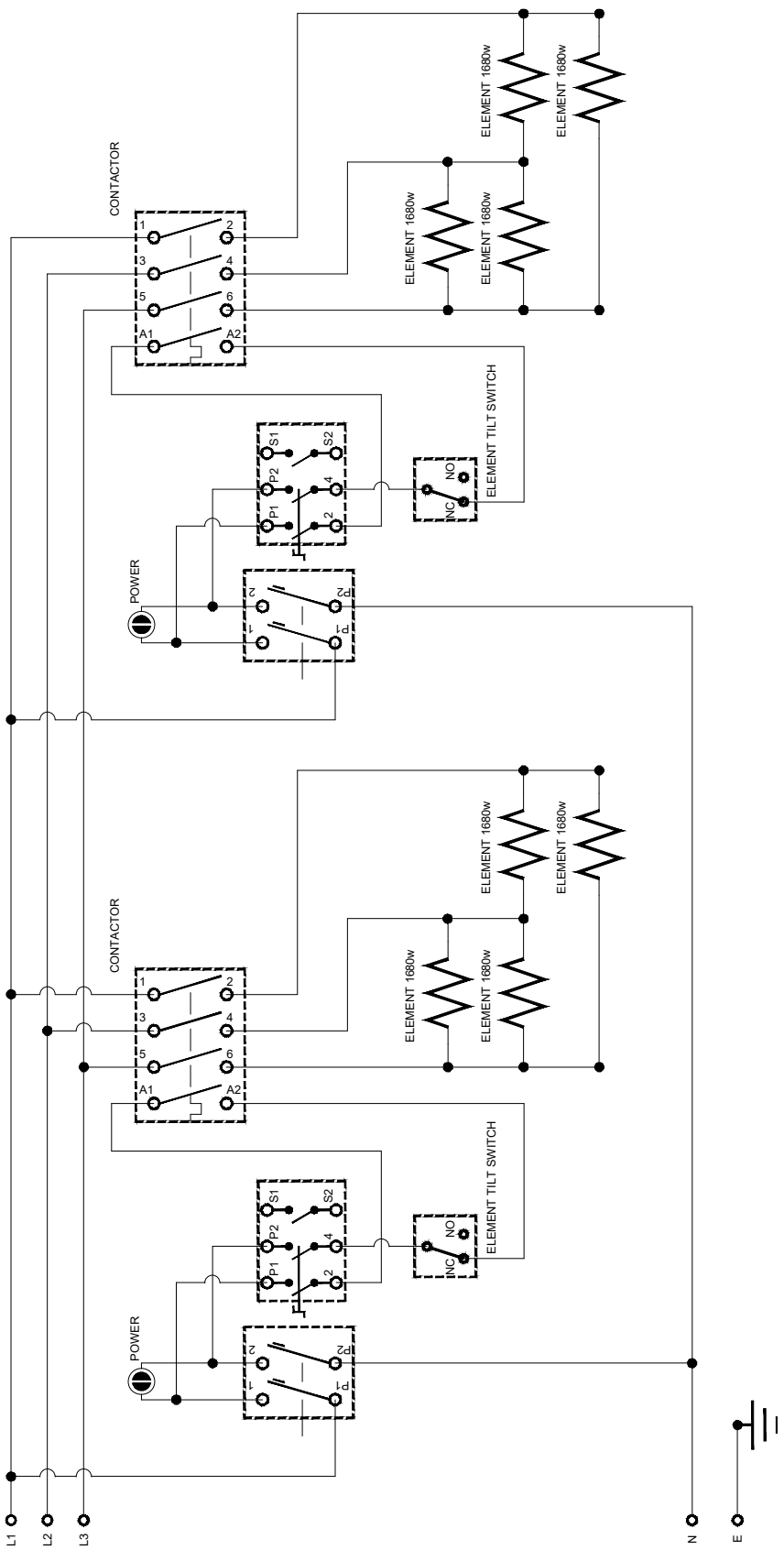

KW COMMERCIAL KITCHEN
Distributed by KW Commercial Kitchen | 1300 001 366
www.kwcommercial.com.au | sales@kwcommercial.com.au

CH8600 - 600 mm Chargrill

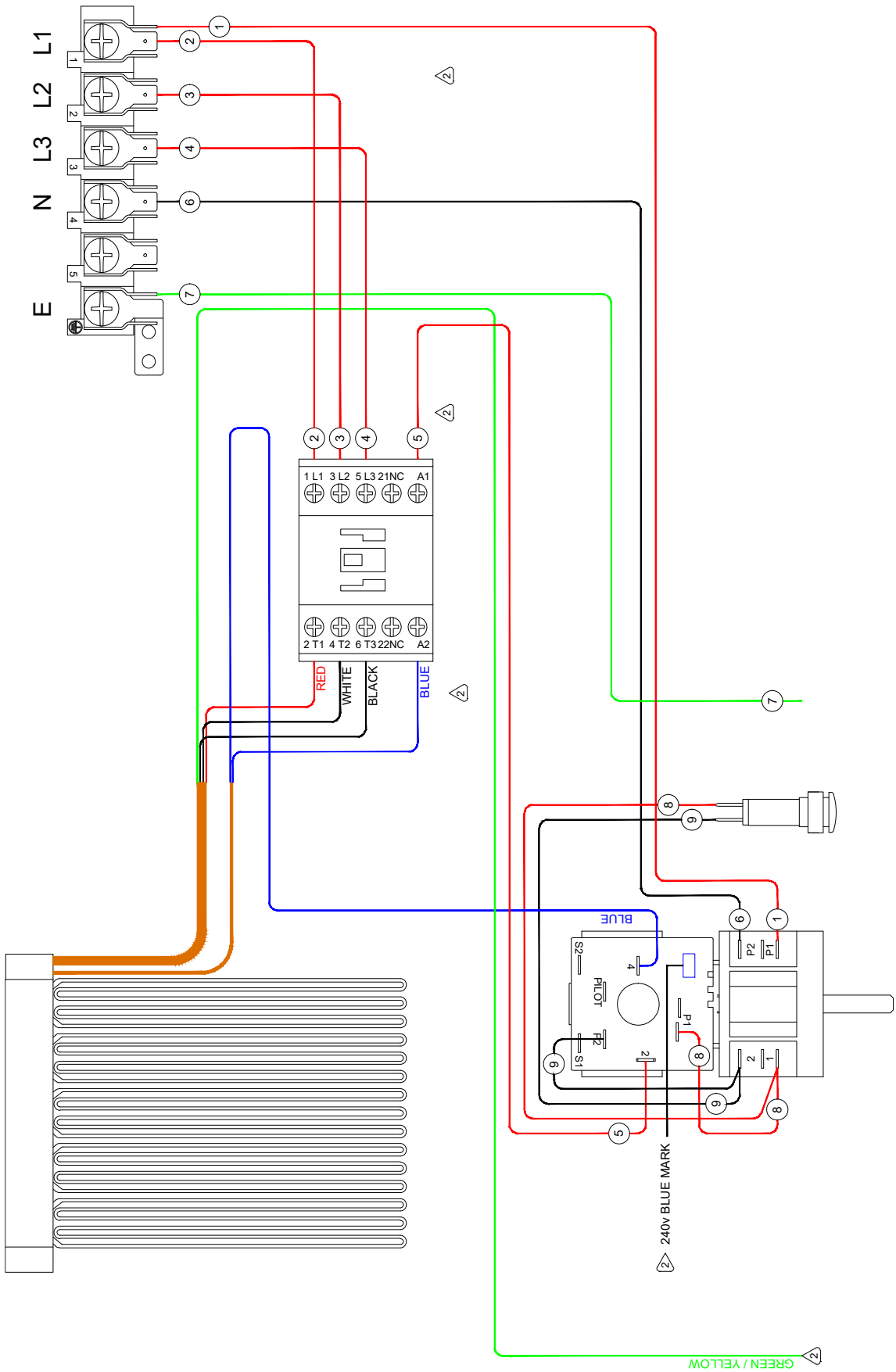

CH8900 - 900 mm Chargrill

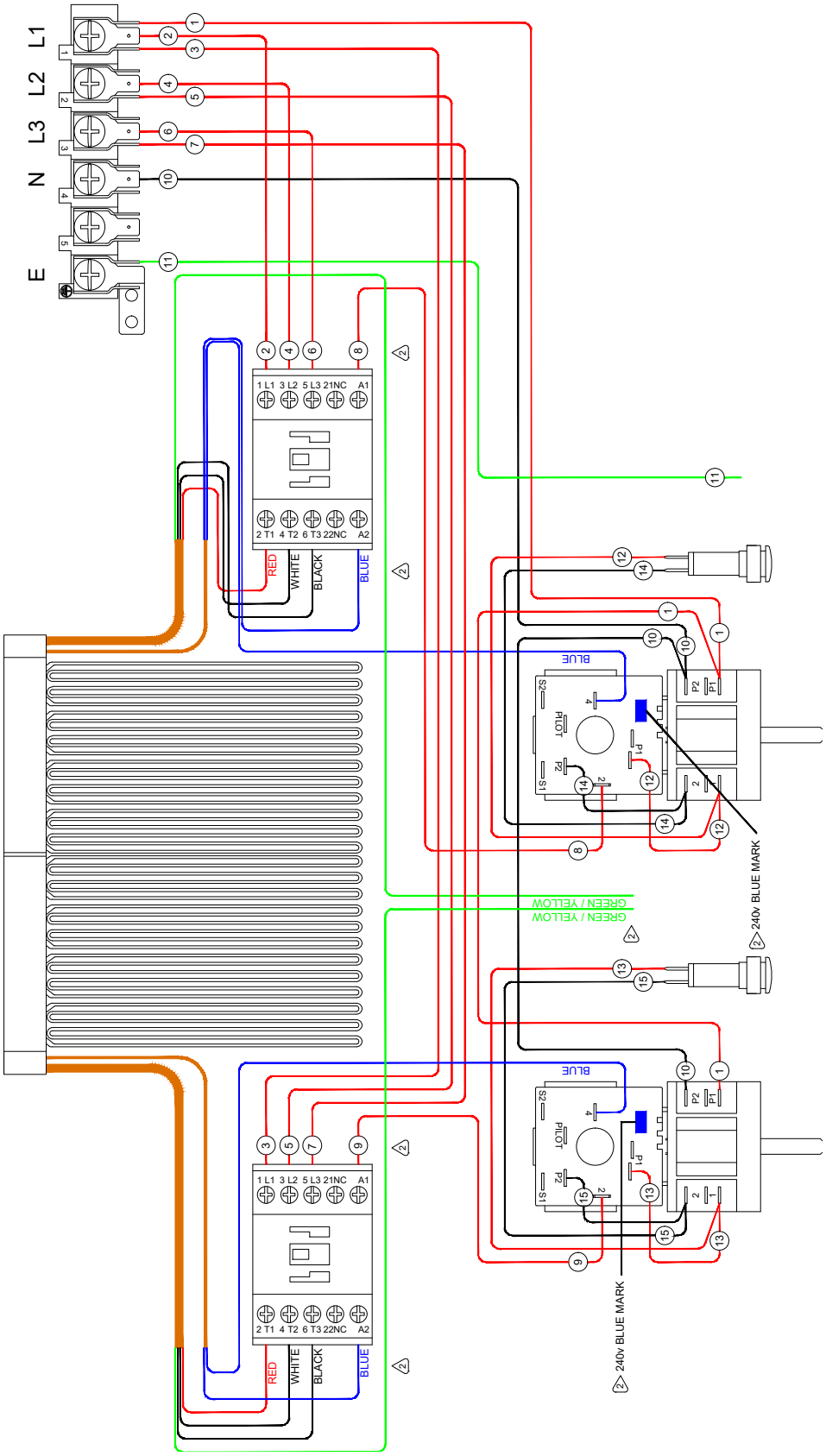

KW COMMERCIAL KITCHEN
Distributed by KW Commercial Kitchen | 1300 001 366
www.kwcommercial.com.au | sales@kwcommercial.com.au

Replacement Parts List

IMPORTANT:

Only genuine authorized replacement parts should be used for servicing and repair of this appliance. Instructions supplied with parts should be followed when replacing components.

For further information and servicing instructions, contact your nearest authorized service branch (contact details are as shown on reverse of front cover of this manual).

When ordering replacement parts, please quote the part number and description as listed below. If the part required is not listed below, request the part by description and quote model number and serial number which is shown on the rating plate.

249004	Contactor 3 Pole DILM7 240 V AC	
013989	Energy Regulator 240 V 50 Hz	
249002	Switch Rotary On-off 2P	
238765	Indicator LED 10 mm Green	
227398	Knob Waldorf 6 mm	
248686M	Electric Chargrill Element 400 V 8400 W	
248687M	Electric Chargrill Element 400 V 13440 W	
249542	Drain Pan 150mm 1/1GN Pan	L and C models only
249582	Drain Pan WA 600	B models only
249512	Drain Pan WA 900	B models only
249052	Electric Chargrill 600 Rear Splash Guard	
249053	Electric Chargrill 900 Rear Splash Guard	
249054	Electric Chargrill Side Splash Guard LH	
249055	Electric Chargrill Side Splash Guard RH	
249498	Electric Chargrill Drain Plug	
249649	O-Ring NBR 70 SH 33x3.5	
249499	Element Stay 600	
249510	Element Stay 900	
249526	Element lifting / cleaning tool	

General

227855	Leg 80 mm	B models only
227850	Rear Leg 150 mm (Flush Stud)	C models only
227851	Leg 150 mm (Extended Stud)	L models only
240534	Front Leg Assembly 150 mm X Ø63 mm C/W Plate	C models only
229674	Rear Roller Assembly	L and C models only

KW COMMERCIAL KITCHEN
Distributed by KW Commercial Kitchen | 1300 001 366
www.kwcommercial.com.au | sales@kwcommercial.com.au