PRODUCT DOCUMENT PACK

Prepared and distributed by KW Commercial Kitchen

PRODUCT

Waldorf FF8135E Filtamax Fryer Oil Filter — 30L

Model / SKU: FF8135E

KW COMMERCIAL KITCHEN

7/72 Canterbury Road, Bankstown NSW 2200

Phone 1300 001 366

Email sales@kwcommercial.com.au

Web www.kwcommercial.com.au

Scan for the current KW product page

DOCUMENT NOTICE

The supplier document begins on the next page. KW contact branding is added in a separate footer area and does not replace the supplier's instructions, specifications or warranty terms.

Official supplier source: https://moffat.global.ssl.fastly.net/sites/default/files/products/manual/FF8130_FF8135_FF8140_Electric_OM_RoW.pd

Waldorf

FF8130E / FF8135E / FF8140E FRYER FILTER

Installation / Operation Manual

25896-4

MANUFACTURED BY

Moffat Limited
Christchurch
New Zealand

INTERNATIONAL CONTACTS

AUSTRALIA

Moffat Pty Limited
E.Mail: vsales@moffat.com.au
Main Office: (tel): +61 (03) 9518 3888
(fax): +61 (03 9518 3833
Service: (tel): 1800 622 216
Spares: (tel): 1800 337 963
Customer Service: (tel): 1800 335 315
(fax): 1800 350 281

CANADA

Serve Canada
Web: www.servecanada.com
E.Mail: info@servecanada.com
Sales: (tel): 800 551 8795 (Toll Free)
Service: (tel): 800 263 1455 (Toll Free)

NEW ZEALAND

Moffat Limited
Web: www.moffat.co.nz
E.Mail: sales@moffat.co.nz
Main Office: (tel): 0800 663328

UNITED KINGDOM

Blue Seal
Web: www.blue-seal.co.uk
E.Mail: sales@blue-seal.co.uk
Sales: (tel): +44 121 327 5575
(fax): +44 121 327 9711
Spares: (tel): +44 121 322 6640
(fax): +44 121 327 9201
Service: (tel): +44 121 322 6644
(fax): +44 121 327 6257

UNITED STATES

Moffat
Web: www.moffat.com
Sales: (tel): 800 551 8795 (Toll Free)
(tel): +1 336 661 1556
(fax): +1 336 661 9546
Service: (tel): 800 858 4477 (Toll Free)
(tel): +1 366 661 1556
(fax): +1 336 661 1660

REST OF WORLD

Moffat Limited
Web: www.moffat.co.nz
E.Mail: export@moffat.co.nz

The reproduction or copying of any part of this manual by any means whatsoever is strictly forbidden unless authorized previously in writing by the manufacturer.

In line with policy to continually develop and improve its products, Moffat Ltd. reserves the right to change the specifications and design without prior notice.

© Copyright Moffat Ltd. January 2014.

Filtamax Fryer Filter

Contents **Page**

Introduction **5**

Specifications **6**

Installation **9**

Before Checking Operation
Electrical Supply
Installation / Storage

Operation **10**

Preparation of Fryer
Preparation of Filter Unit
Important points to remember

Carbon Filter Pads - option **13**

Cleaning **15**

Trouble Shooting **16**

Wiring Diagram **17**

Spare Parts **19**

Date Purchased..... Serial No.....

Dealer.....

Service Agent.....

INTRODUCTION

Filtering oil is essential to maintain consistent high food quality, extend oil life, prevent smoking and saving on costs.

"Filtamax" complements your Sterlec or Waldorf Single and Twin pan fryers, providing a truly affordable filtration system with unique space saving and mobility features.

Storage

"Filtamax" is housed conveniently below your Fast Fri fryer (30/40 models), utilising the otherwise wasted space, refer specifications, pages 6-8.

Mobility

"Filtamax" can be easily wheeled from its housing to filter any other fryers of the same tank capacity, refer specifications, pages 6-8.

Safety

The rigid delivery tube has a heavy duty insulated handle and positions firmly into position, safe from spillage. There are no flexible hoses and no coupling disconnection's required.

Economy

The reusable filter bags, suitable for up to 500 filters can be easily cleaned and simply drop back into place.

Carbon Pad Option

Upgradeable to carbon pad filtering. Refer to your Filtamax dealer for details.

Speedy operation

The whole operation takes approximately 10 minutes to drain, filter and refill a typical fryer tank.

⚠ WARNING

- **ALWAYS TURN FRYER OFF BEFORE USING FILTER MACHINE**
- **DO NOT USE FILTER MACHINE AS AN OIL STORAGE VESSEL**
- **NEVER STORE FILTER MACHINE UNDER FRYER WITH OIL IN FILTER MACHINE**
- **ALWAYS USE PROTECTIVE GEAR WHEN FILTERING HOT OIL**

KW COMMERCIAL KITCHEN
Distributed by KW Commercial Kitchen | 1300 001 366
www.kwcommercial.com.au | sales@kwcommercial.com.au

SPECIFICATIONS

Model: FF8130E

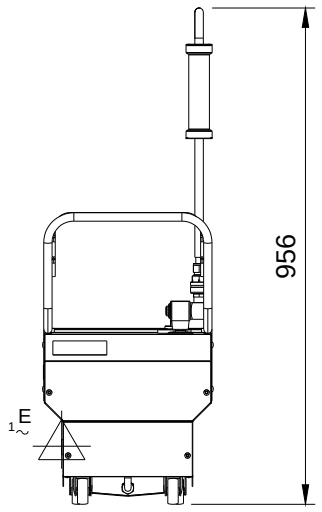

Front

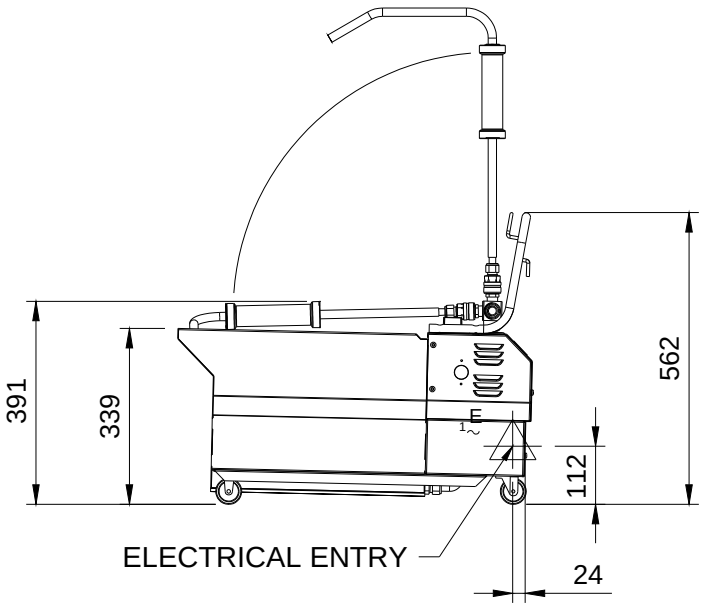

Side

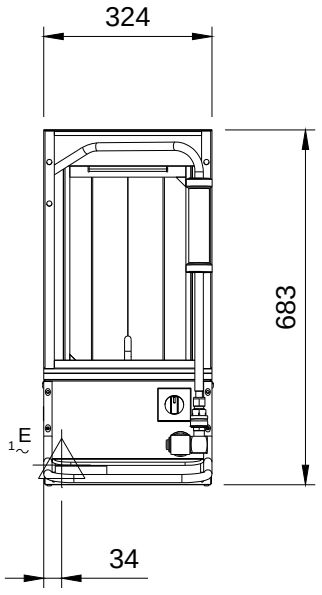

Plan

Electrical Connection	110/120V, 60Hz, 1P+N+E, 6.4A 220/240 V, 50 Hz, 1P+N+E, 3.2A
Pump	1/3 HP single phase reversible pump
Filtering Capacity	Fryers up to 20 litres cold oil capacity
Fryer Filter Storage	Waldorf FN8120G / FN8226G

KW COMMERCIAL KITCHEN
Distributed by KW Commercial Kitchen | 1300 001 366
www.kwcommercial.com.au | sales@kwcommercial.com.au

SPECIFICATIONS

Model: FF8135E

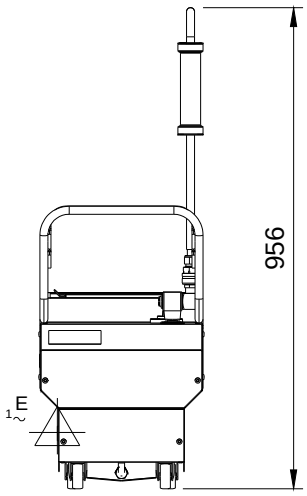

Front

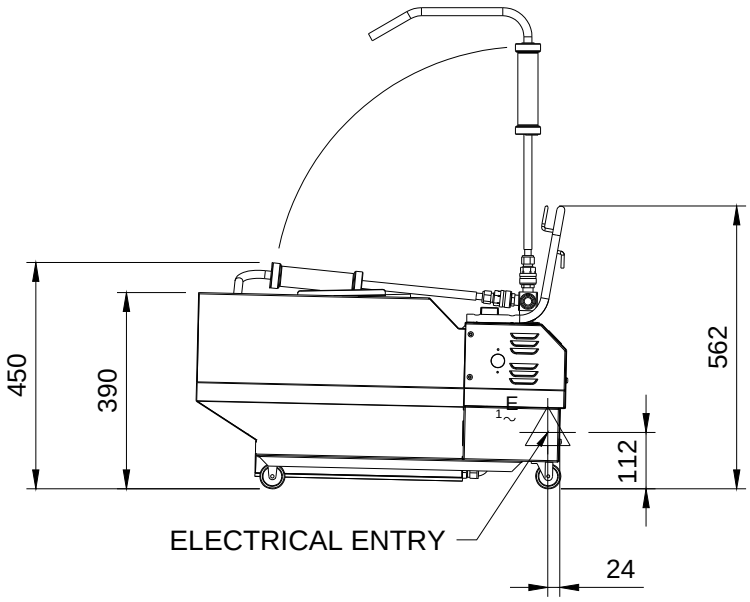

Side

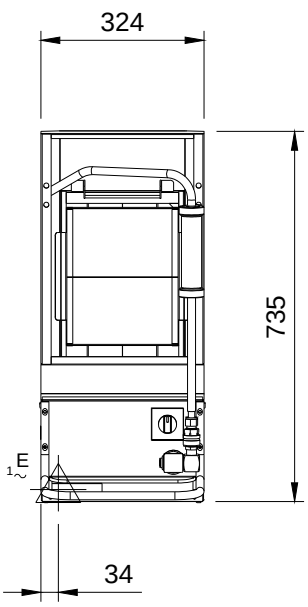

Plan

Electrical Connection	110/120V, 60Hz, 1P+N+E, 6.4A 220/240 V, 50 Hz, 1P+N+E, 3.2A
Pump	1/3 HP single phase reversible pump
Filtering Capacity	Fryers up to 30 litres cold oil capacity
Fryer Filter Storage	No filter storage available

KW COMMERCIAL KITCHEN
Distributed by KW Commercial Kitchen | 1300 001 366
www.kwcommercial.com.au | sales@kwcommercial.com.au

SPECIFICATIONS

Model: FF8140E

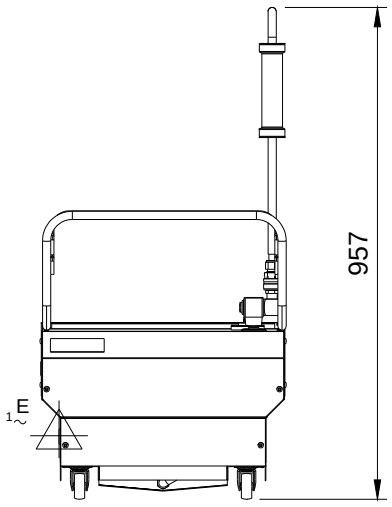

Front

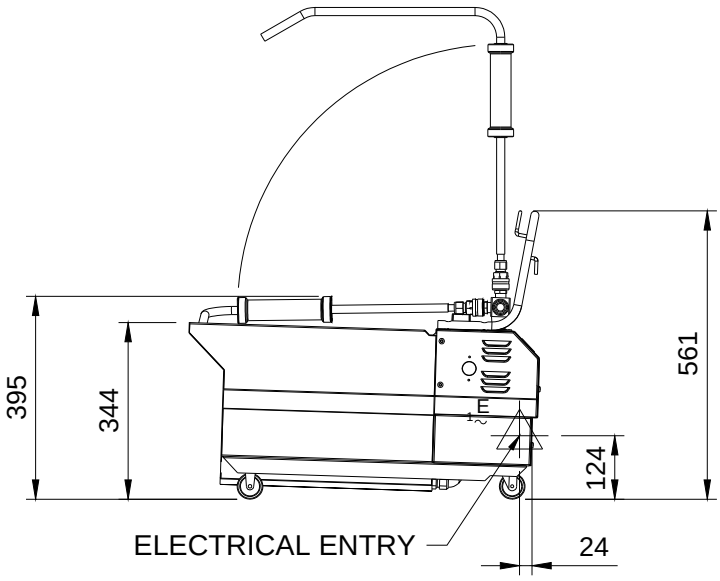

Side

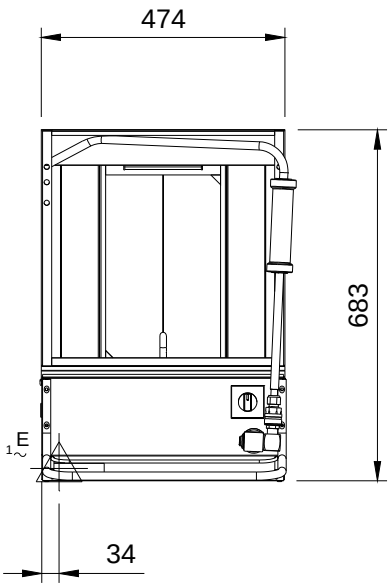

Plan

Electrical Connection	110/120V, 60Hz, 1P+N+E, 6.4A 220/240 V, 50 Hz, 1P+N+E, 3.2A
Pump	1/3 HP single phase reversible pump
Filtering Capacity	Fryers up to 32 litres cold oil capacity
Fryer Filter Storage	Waldorf FN8130GHPO

KW COMMERCIAL KITCHEN
Distributed by KW Commercial Kitchen | 1300 001 366
www.kwcommercial.com.au | sales@kwcommercial.com.au

INSTALLATION

It is most important that the filter is checked and that the unit is operating correctly before handing over to the user.

Before Checking Operation

Unpack and check unit for damage and report any damage to the carrier and supplier. Report any deficiencies to your supplier.

Check that the unit has been supplied with the following:

1 x Filter Bag
1 x Filter Bag Frame
1 x Return Delivery Tube

Electrical supply

Check that the available power supply is suitable. The filter rating plate is located on the side panel below the return delivery tube swivel fitting.

110-120V, 60Hz, 1P+N+E, 6.4 Amp
220-240V, 50Hz, 1P+N+E, 3.2 Amp.

The Filter unit is a mobile appliance and is provided with a 2.5 metre cord set for plugging into a matching electrical socket of the required electrical supply when in use.

When not in use the cord set is stored around the cord-stowage frame on the filter unit's handle.

Important: If an electrical socket is not located in range of the filter cord set when the filter is in position, an extension cord will be necessary. Only use an extension cord with suitable residual current device (R.C.D) circuit breaker. Ensure the R.C.D is connected between the power supply and the extension cord.

Installation / Storage

FF8130E The FF8130E Fryer Filter is designed for use with Waldorf FN8120G/GE and FN8226G/GE gas fryers. The filter is easily stored under these fryers, it can however be stored anywhere provided it is not obstructing normal kitchen traffic and obstructing use of other equipment.

FF8135E The FF8135E Fryer Filter is designed for use with Sterlec FN8123E/EE, FN8223E, FN8127E/EE, FN8224E/EE, FN3050ECS and FN3052ECS electric fryers. As it cannot be stored under the fryers, it can be stored anywhere provided it is not obstructing normal kitchen traffic and obstructing use of other equipment.

FF8140E The FF8140E Fryer Filter is designed for use with Waldorf FN8130GHPO, FN8130G/GE gas fryers. The filter is easily stored under these fryers, it can however be stored anywhere provided it is not obstructing normal kitchen traffic and obstructing use of other equipment.

Never store the fryer filter in a location where it may be subject to damage or foreign matter being dropped into the filter tank or filter bag.

KW COMMERCIAL KITCHEN
Distributed by KW Commercial Kitchen | 1300 001 366
www.kwcommercial.com.au | sales@kwcommercial.com.au

OPERATION

⚠ WARNING

- **ALWAYS TURN FRYER OFF BEFORE USING FILTER MACHINE**
- **DO NOT USE FILTER MACHINE AS AN OIL STORAGE VESSEL**
- **NEVER STORE FILTER MACHINE UNDER FRYER WITH OIL IN FILTER MACHINE**
- **ALWAYS USE PROTECTIVE GEAR WHEN FILTERING HOT OIL**

Preparation of Fryer

1. For safe working practice the fryer should only be filtered with the oil temperature between 120° - 150°C.

2. Always ensure the fryer is turned off when filtering.

3. Cold oil or solid shortening will not filter effectively, therefore if filtering from a cold start set thermostat to 150°C, ie. maximum filtering temperature and allow oil to come up to temperature before starting filter process.

Preparation of Filter Unit

1. With oil in fryer tank at filtering temperature, ensure fryer is turned off.

2. Open fryer door.

3. If filter unit is stored under fryer to be filtered, pull filter unit out from under fryer.

4. Ensure filter bag is fitted correctly, refer figure A.

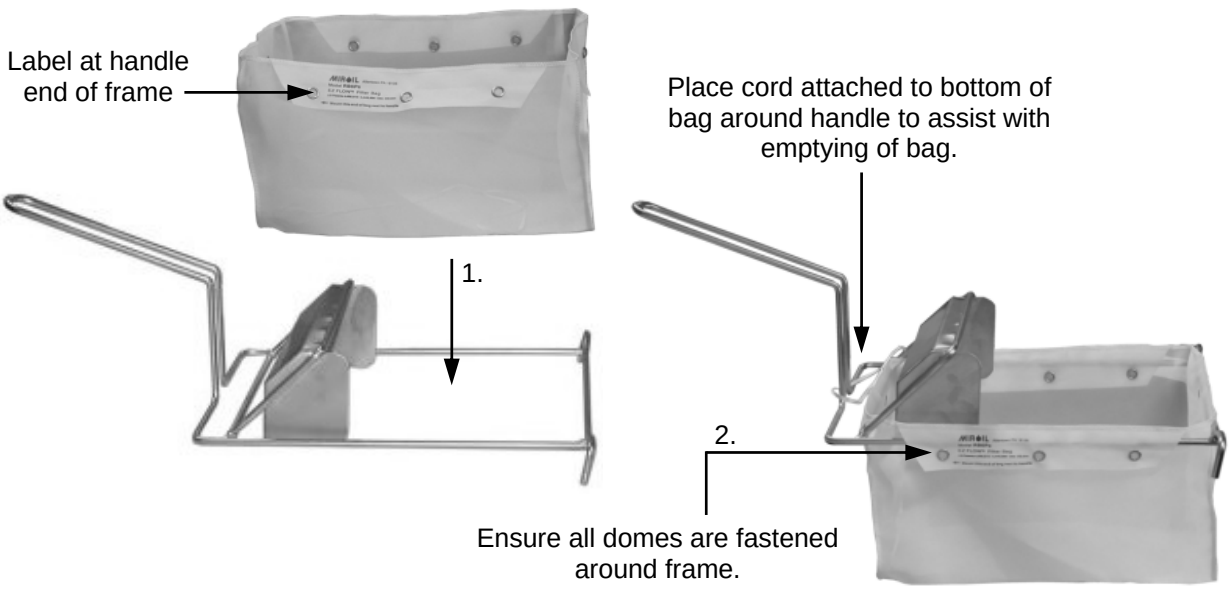

Figure A.

5. Lift up return tube assembly and position filter bag frame in front mounting holes (holes nearest return tube) so that filter bag is in the correct filtering position (horizontal).

KW COMMERCIAL KITCHEN
Distributed by KW Commercial Kitchen | 1300 001 366
www.kwcommercial.com.au | sales@kwcommercial.com.au

OPERATION

6. Unwind electrical supply cord of Filtamax filter from around cord hanger and plug into correct electrical supply. Ensure filter control switch is in the “Off“ position before turning electrical supply on.

7. Switch on electrical supply.

8. Push Filtamax filter unit back into cabinet so that the filter bag drain guard is positioned over the drain valve of the fryer.

9. Position the return tube over the nose rail of the fryer so that the outlet is positioned towards the inside of the fryer tank.

10. The fryer is now ready for filtering.

11. Release the safety catch on the fryer drain valve and slowly open the valve. Drain entire contents of fryer tank into the filter unit.

12. When contents of fryer have been drained into filter unit, remove the sediment tray from the fryer tank for separate cleaning.

13. Holding the return tube insulated handle with one hand, set the filter pump switch to the forward position. The filter will now start pumping the oil from the filter tank back into the fryer tank.

14. With the drain valve still open the returning oil can now be used to wash down sediment from around the tank sides out the drain and into the filter bag.

    To get at all the sediment on the tank insides it may be necessary to use a scrubbing brush to assist with the oil washing down.

15. When the inside of the fryer tank has been suitably washed out, set the filter pump switch back to the “off” position and close the fryer drain valve.

16. The filtered oil can now be returned back to the fryer tank. With the drain valve still closed, set the filter pump switch to the “forward” position again and pump the oil back into the fryer tank.

17. When oil ceases to exit from the return tube and the pump appears to be pumping air only, set the filter pump switch back to the “off” position.

18. Lifting away the return tube by the insulated handle carefully pull the filter unit out from under the fryer until the filter unit is clear.

19. Remove the filter bag and frame from the filter unit.

20. Place the return tube back into it’s storage position.

21. The filter bag sediment contents should now be discarded. The filter bag itself once emptied of the sediment should be cleaned by washing out in hot water only. It is not necessary to unclip the filter bag from the filter bag frame for washing out purposes, although this may be done if desired.

22. With the return tube back in it’s storage position, set the filter pump switch to the “reverse” setting to flush out any oil contained in the pump system back into the filter tank.

NOTE: It is necessary to hold the filter pump switch when in the reverse position for approximately 5-10 seconds to effectively flush all the oil from the pump system.

IMPORTANT

Always ensure that the reversing pump flush out procedure is carried out at the end of a filter operation. If this procedure is not followed, oil or shortening may solidify in the pump system and cause blockages when next filtering.

KW COMMERCIAL KITCHEN
Distributed by KW Commercial Kitchen | 1300 001 366
www.kwcommercial.com.au | sales@kwcommercial.com.au

23. The residual oil now left in the base of the filter tank should now be mopped out and the filter tank cleaned out dry. Do not use a soapy solution to wash out the filter tank as soap is alkaline based and it is alkali's that are responsible for rapid oil breakdown.

24. Place the filter bag and filter bag frame back into the filter unit by positioning the legs of the filter bag frame into the rear positioning holes in the top of the filter tank so that the filter bag frame rests down on an angle and the filter bag frame handle sits flat on top of the pump housing.

25. Switch off the electrical supply and disconnect the filter supply cord. Wind the supply cord back around the filter handle and cord hanger in a clockwise direction tidily.

26. The filtering process is now complete and the filter can be pushed back under the fryer for stowage.

Important Points to Remember When Filtering

a) Always ensure the oil temperature is safe for the filtering process.
Ideally it should be between 120° - 150°C.

b) Always ensure the reverse flushing operation for the pump system is conducted to eliminate the possibility of blockages occurring in the pump system particularly when using shortening.

NOTE: If this procedure is not conducted or if the residual shortening left in the base of the filter tank at the end of a filter operation is not mopped out and the shortening has been left to solidify, it will be necessary to either:-

i) Remove the solid shortening from the base of the filter tank (ensure bleed hole in pick up tube is also free of shortening, refer figure B.) before starting the next filter operation.

ii) When next filtering leave the hot oil or shortening in the filter tank for 10-15 minutes to allow the hot oil to melt any solid shortening left in the base of the filter tank or in the pump pick up tube inside the filter tank.

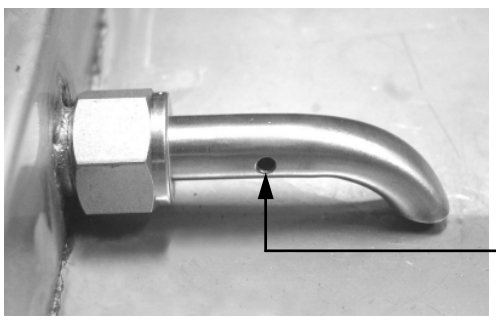

Figure B.

c) The filtering process is designed to be conducted with the operator always in attendance. Do not leave the filter unit pumping oil unattended.

d) Under heavy use situations, the sediment etc accumulated in the cool zone of the fryer may require the filtering process to be conducted twice.

e) Due to the temperature of the oil being pumped, filtering should always be done with due caution being taken. Never touch the return delivery tube except for the insulated handle.

KW COMMERCIAL KITCHEN
Distributed by KW Commercial Kitchen | 1300 001 366
www.kwcommercial.com.au | sales@kwcommercial.com.au

CARBON FILTER PADS - OPTION

Filter Pad - Option

With Supersorb Carbon pads you can achieve even better quality by removing particles 30-50 times smaller than can be removed with standard filtering methods. Which means food can be cooked more efficiently, it tastes better, and you will benefit from reduced oil replacement costs.

If it is desired to use carbon filter pads, then the Filter Pad Kit (part 025669) is required.

To purchase carbon filter pads contact your Filtamax dealer, pad type - FILCO SUPER SORB F16

Converting to Pad Filtering

Strainer Frame

1) Remove filter bag from bag frame.
2) Insert strainer into frame (refer figure A).

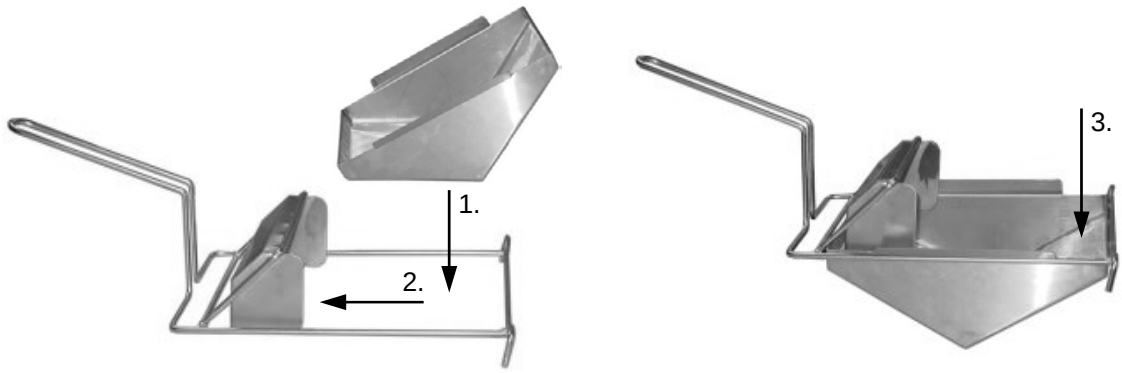

Figure A.

Fitting Filter Pad to Filter

1) Ensure inside of filter is clean (refer Cleaning Instructions page 15).
2) Place Filter Plate in bottom of filter (refer figure B).
3) Fit filter pad with the rough surface up (refer figure C).

   NOTE: The pad has one corner removed which must line up with the corner bracket in the front of the tank.

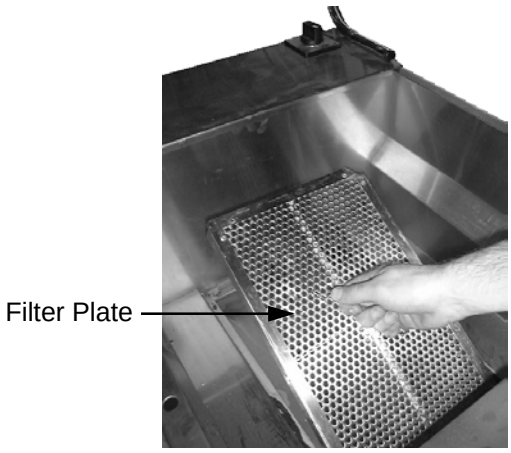

Figure B.

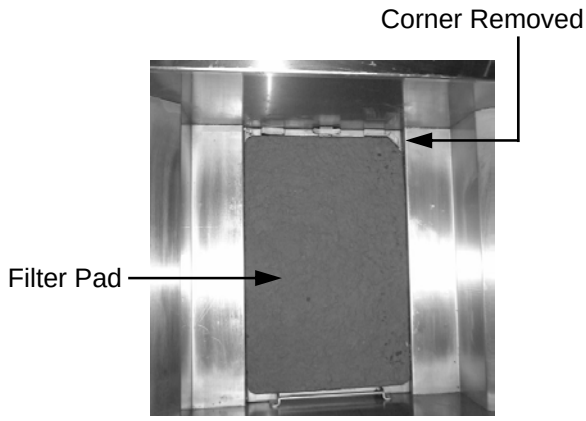

Figure C.

Distributed by KW Commercial Kitchen | 1300 001 366
www.kwcommercial.com.au | sales@kwcommercial.com.au

CARBON FILTER PADS - OPTION

4) Fit filter clamp over filter and lock into place by rotating handle (refer figure D).
5) Place strainer frame on filter unit (refer figure E), Filter is ready for use.

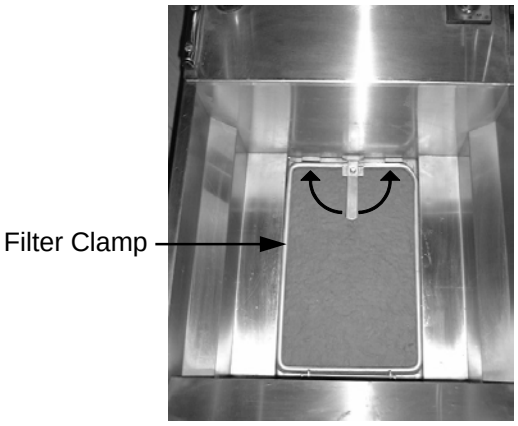

Figure D.

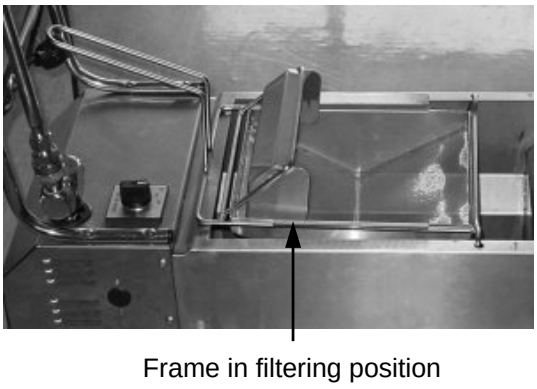

Figure E.

Filter Pad Replacement

Filter pads should be replaced daily to maintain filtering efficiency and to ensure good hygiene.

Filter unit must be empty. If the unit has recently been used for filtering, **allow sufficient time for items inside the tank to cool to a safe handling temperature** before proceeding.

1) Remove strainer and place the return tube assembly to the storage position (refer figure F).
2) Release filter clamp by rotating latch handle a ¼ turn in either direction (refer figure D). Pivot clamp to upright position. (Remove if cleaning required).
3) Remove old filter pad. Remove any crumbs or residue from inside of tank by wiping clean (refer figure G).
4) If required, the filter plate can also be removed, cleaned, and refitted (refer figure B).
5) Fit new filter pad with rough surface up.

   NOTE: The pad has one corner removed which must line up with the corner bracket in the front of the tank (refer figure C).
6) Refit filter clamp and secure latch (handle facing rear of tank, refer figure D). Refit strainer. Filter unit is now ready to be used.

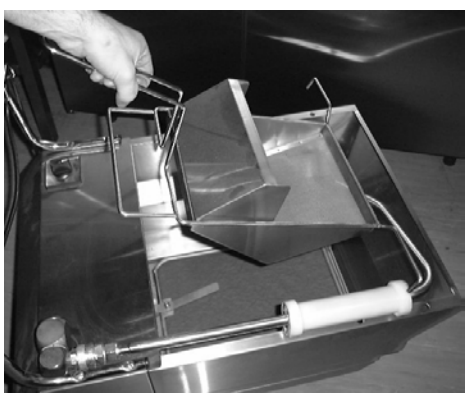

Figure F.

Figure G.

KW COMMERCIAL KITCHEN
Distributed by KW Commercial Kitchen | 1300 001 366
www.kwcommercial.com.au | sales@kwcommercial.com.au

CLEANING INSTRUCTIONS

Exterior

Clean with detergent. You may require to use a good quality stainless steel cleaner or stainless steel wool for heavy duty cleaning. Always apply cleaner when the filter is cool and rub in the direction of the “grain”.

Do not use detergent or stainless steel cleaner on inside of filter tank.

Interior

Refer to the operating instructions for filter tank cleaning necessary after each filter.

For general cleaning, the interior of the filter tank should be cleaned out with dry rags or kitchen towels.

As filtered oil comes into contact with the inside surfaces of the tank it is important that cleaning will not leave moisture or more importantly detergent residues on the tank surface as these will breakdown the oil when they come in contact.

Therefore:-

DO NOT - run a water/detergent solution through the filter system.

DO NOT - run hot water through the filter system.

If it is necessary to thoroughly clean the inside of the filter tank, a hot wash can be carried out. This should be performed by tipping the fryer filter on its end (so the filter handle is up) and manually wash out the filter tank with a scrubbing brush or similar.

ALWAYS dry tank with dry rags or kitchen towels before filtering oil or shortening.

Filter Pad - Option

Remove mesh strainer and clean in hot water only, dry.

Remove filter pad (refer filter pad replacement, page 14)

Remove filter clamp and clean in hot water only, dry.

Lift out filter plate by wire handle in centre of plate and clean in hot water only, dry.

The residual oil left in the base of the filter tank should now be mopped out and the filter tank cleaned out dry. Do not use a soapy solution to wash out the filter tank as soap is alkaline based and it is alkali’s that are responsible for rapid oil breakdown.

Refit filter plate, new filter pad, filter clamp and strainer.

Filter Bags

Refer to Operating Instructions for filter bag cleaning necessary after each filter operation.

<u>NEVER</u> WASH FILTER BAGS OUT IN A DETERGENT SOLUTION.

<u>Only</u> ever wash filter bags in hot clean water.

<u>Always</u> dry out filter bags before filtering oil or shortening.

KW COMMERCIAL KITCHEN
Distributed by KW Commercial Kitchen | 1300 001 366
www.kwcommercial.com.au | sales@kwcommercial.com.au

TROUBLE SHOOTING

ENSURE POWER IS SWITCHED OFF BEFORE SERVICING.

All servicing should be carrier out by a competent electrical serviceman.

FAULT	CAUSE	REMEDY
Motor/Pump will not operate (no motor/pump noise).	No power to unit.	Check supply cord connection. Check power supply is on. Check power is available at supply.
	Motor overload protection has tripped.	Remove access plug from L/H side panel and reset overload switch (depress).
Motor/Pump will not operate (motor/pump makes noise but will not pump oil/shortening).	Motor / Pump stalled.	Switch off then switch on again either in forward or reverse direction.
	Blockage in pump or delivery system.	Refer operating instructions - “Important points to remember” page 12. If unable to free blockage contact an authorised service company.

All other faults refer to an authorised service company.

KW COMMERCIAL KITCHEN
Distributed by KW Commercial Kitchen | 1300 001 366
www.kwcommercial.com.au | sales@kwcommercial.com.au

WIRING DIAGRAM

110 - 120V, 60Hz, 1P+N+E, 6.4A

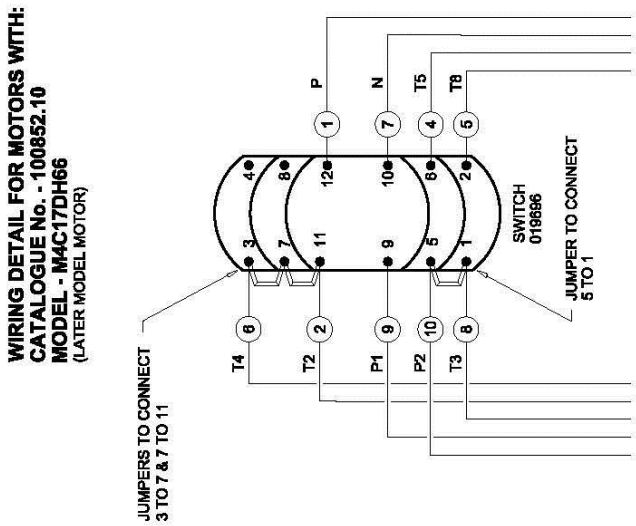

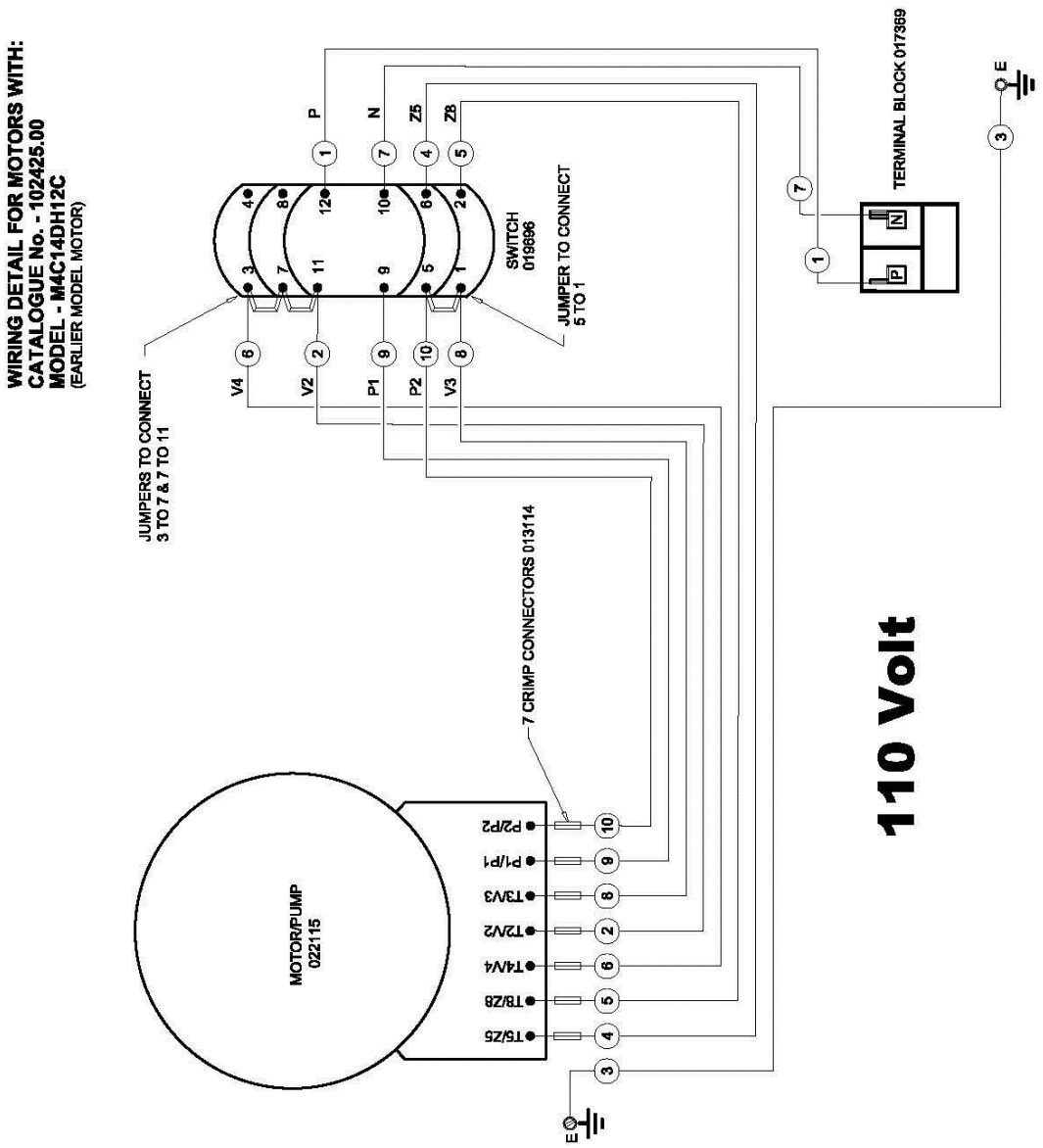

KW COMMERCIAL KITCHEN
Distributed by KW Commercial Kitchen | 1300 001 366
www.kwcommercial.com.au | sales@kwcommercial.com.au

WIRING DIAGRAM

220 - 240V, 50Hz, 1P+N+E, 3.2A

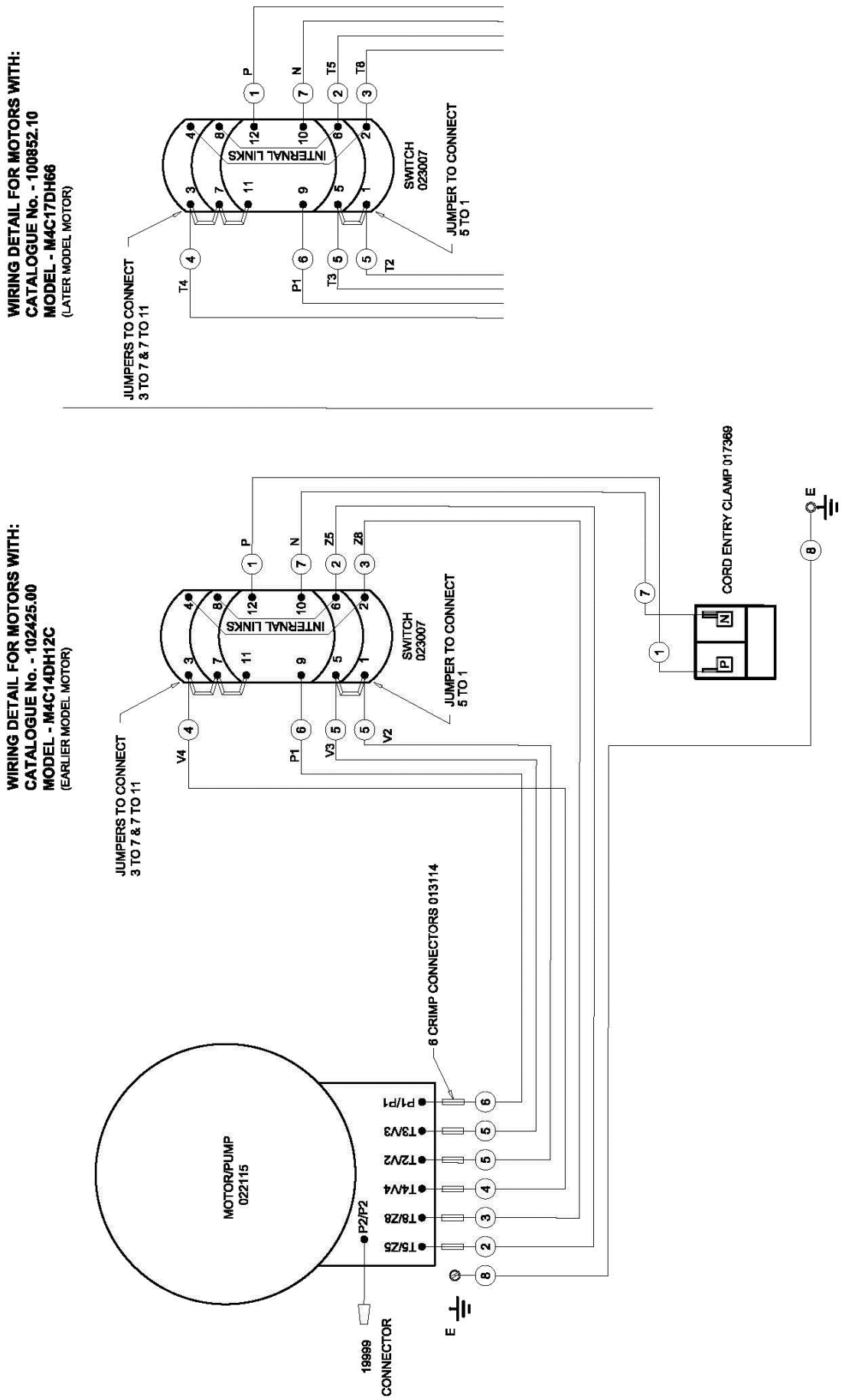

COMMERCIAL KITCHEN
Distributed by KW Commercial Kitchen | 1300 001 366
www.kwcommercial.com.au | sales@kwcommercial.com.au

SPARE PARTS

FF8130E / FF8135E / FF8140E FRYER FILTER

Part No.	Description
025669	Filter Pad Kit - Option
019695	Filter Bag
019784	Filter Bag Frame (FF8130E / FF8135E)
025521	Filter Bag Frame (FF8140E)
023007	Motor/Pump Switch
023009	Motor Switch Seal
019684	Quick Connect Coupling Stem
019683	Quick Connect Coupling Body
020717	Swivel Union Assembly
022814	Oil Pick Up Tube
019808	Motor Overload Access Plug
019668	Filter Handle (FF8130E / FF8135E)
024008	Filter Handle (FF8140E)
235548	Motor / Pump Assembly
025848	Pump
SA1159	Wand Assembly (FF8130E / FF8135E)
SA1556	Wand Assembly (FF8140E)
020417	Flexible Hose Assembly (FF8130E / FF8135E / FF8140E) - Option

O-Ring replacements for the quick-connect coupling body are:-

SWAGELOCK - Type VITON - Code VT-114-70-OR
or equivalent VITON O-Ring $^{5}/_{8}$" x $^{3}/_{32}$"

O-Ring replacements for the swivel fitting body are:-

VITON O-Ring $^{3}/_{4}$" x $^{1}/_{16}$"

KW COMMERCIAL KITCHEN
Distributed by KW Commercial Kitchen | 1300 001 366
www.kwcommercial.com.au | sales@kwcommercial.com.au