PRODUCT DOCUMENT PACK

Prepared and distributed by KW Commercial Kitchen

PRODUCT

Waldorf GPL8900G-LS 900mm Gas Griddle Low Back Version Leg Stand

Model / SKU: GPL8900G-LS

KW COMMERCIAL KITCHEN

7/72 Canterbury Road, Bankstown NSW 2200

Phone 1300 001 366

Email sales@kwcommercial.com.au

Web www.kwcommercial.com.au

Scan for the current KW product page

DOCUMENT NOTICE

The supplier document begins on the next page. KW contact branding is added in a separate footer area and does not replace the supplier's instructions, specifications or warranty terms.

Official supplier source: https://moffat.global.ssl.fastly.net/sites/default/files/products/manual/Waldorf_GPX8000G_228676-28_OM_AN.pdf

Waldorf®
800 SERIES

Installation and Operation Manual

Gas Griddle

GP8450G	GPL8450G	GPB8450G	GPLB8450G
GP8600G	GPL8600G	GPB8600G	GPLB8600G
GP8900G	GPL8900G	GPB8900G	GPLB8900G
GP8120G	GPL8120G	GPB8120G	GPLB8120G

Date Purchased

Serial Number

Dealer

Service Provider

For use in GB & IE

228676-28

KW COMMERCIAL KITCHEN
Distributed by KW Commercial Kitchen | 1300 001 366
www.kwcommercial.com.au | sales@kwcommercial.com.au

MANUFACTURED BY

Moffat Limited
Rolleston 7675
New Zealand

INTERNATIONAL CONTACTS

AUSTRALIA

Moffat Pty Limited

Web:	www.moffat.com.au
E.Mail:	vsales@moffat.com.au
Main Office:	(tel) +61 (03) 9518 3888
	(fax) +61 (03) 9518 3833
Service:	(tel): 1800 622 216
Spares:	(tel): 1800 337 963
Customer Service:	(tel): 1800 335 315
	(fax): 1800 350 281

CANADA

Serve Canada

Web:	www.servecanada.com
E.Mail:	info@servecanada.com
Sales:	(tel): 800 551 8795 (Toll Free)
Service:	(tel): 800 263 1455 (Toll Free)

NEW ZEALAND

Moffat Limited

Web:	www.moffat.co.nz
E.Mail:	sales@moffat.co.nz
Main Office:	(tel): 0800 663328

UNITED KINGDOM

Blue Seal

Web:	www.blue-seal.co.uk
E.Mail:	sales@blue-seal.co.uk
Sales:	(tel): +44 121 327 5575
	(fax): +44 121 327 9711
Spares:	(tel): +44 121 322 6640
	(fax): +44 121 327 9201
Service:	(tel): +44 121 322 6644
	(fax): +44 121 327 6257

UNITED STATES

Moffat

Web:	www.moffat.com
Sales:	(tel): 1-800 551 8795 (Toll Free)
	(tel): 336 661 1556
	(fax): 336 661 9546
Service:	(tel): 866 673 7937 (Toll Free)

REST OF WORLD

Moffat Limited

Web:	www.moffat.co.nz
E.Mail:	export@moffat.co.nz

The reproduction or copying of any part of this manual by any means whatsoever is strictly forbidden unless authorized previously in writing by the manufacturer.

In line with policy to continually develop and improve its products, Moffat Ltd. reserves the right to change the specifications and design without prior notice.

© Copyright Moffat Ltd. March 2017.

Contents

Waldorf Gas Griddle

GP(L)(B)**8450G Gas Griddle 450mm.**
GP(L)(B)**8600G Gas Griddle, 600mm.**
GP(L)(B)**8900G Gas Griddle, 900mm.**
GP(L)(B)**8120G Gas Griddle, 1200mm.**

Introduction **2**

Specifications **3**
- Model Numbers Covered in this Specification
- General
- Gas Supply Requirements
- Gas Connection

Dimensions **5**

Installation **9**
- Installation Requirements
- Unpacking
- Location
- Clearances
- Assembly
- Fitting Rear Rollers
- Gas Connection
- Commissioning

Operation **13**
- Operation Guide
- Description of Controls
- Lighting Pilot Burner
- Lighting Main Burner
- Turning 'Off' Main Burner / Pilot
- Re-Setting Overtemp Device (All UK Chrome Plate and optional All Other models)

Cleaning and Maintenance **16**
- Routine Maintenance
- After Each Use
- Daily Cleaning
- Weekly Cleaning
- Periodic Maintenance

Fault Finding **19**

Gas Conversion and Specifications **20**
- Conversion Procedure
- Gas Specifications

Replacement Parts List **23**

Introduction

We are confident that you will be delighted with your WALDORF GAS GRIDDLE, and it will become a most valued appliance in your commercial kitchen.

To ensure you receive the utmost benefit from your new Waldorf GAS GRIDDLE, there are two important things you can do.

Firstly:

Please read the instruction book carefully and follow directions given. The time taken will be well spent.

Secondly:

If you are unsure of any aspect of the installation, instructions or performance of your appliance, contact your WALDORF dealer promptly. In many cases a phone call could answer your question.

CE Only:

These instructions are only valid if the country code appears on the appliance. If code does not appear on appliance, refer to supplier of this appliance to obtain technical instructions for adapting appliance to conditions for use in that country.

Warning

IMPROPER INSTALLATION, ADJUSTMENT, ALTERATION, SERVICE OR MAINTENANCE CAN CAUSE PROPERTY DAMAGE, INJURY OR DEATH. READ THE INSTALLATION, OPERATING AND MAINTENANCE INSTRUCTIONS THOROUGHLY BEFORE INSTALLING OR SERVICING THIS APPLIANCE.

Warning

INSTRUCTIONS TO BE FOLLOWED IN THE EVENT THE USER SMELLS GAS ARE TO BE POSTED IN A PROMINENT LOCATION. THIS INFORMATION SHALL BE OBTAINED BY CONSULTING THE LOCAL GAS SUPPLIER.

Warning

GREAT CARE MUST BE TAKEN BY THE OPERATOR TO USE THE EQUIPMENT SAFELY TO GUARD IT AGAINST RISK OF FIRE.

- **THE APPLIANCE MUST NOT BE LEFT ON UNATTENDED.**
- **IT IS RECOMMENDED THAT A REGULAR INSPECTION IS MADE BY A COMPETENT SERVICE PERSON TO ENSURE CORRECT AND SAFE OPERATION OF YOUR APPLIANCE IS MAINTAINED.**
- **DO NOT STORE OR USE GASOLINE OR OTHER FLAMMABLE VAPOURS OR LIQUIDS IN THE VICINITY OF THIS OR ANY OTHER APPLIANCE.**
- **DO NOT SPRAY AEROSOLS IN THE VICINITY OF THIS APPLIANCE WHILE IT IS IN OPERATION.**

Caution

- **This appliance is for professional use and is only to be used by qualified persons.**
- **Only authorised service persons are to carry out installation, servicing or gas conversion operations.**
- **Components having adjustments protected (e.g. paint sealed) by the manufacturer should not be adjusted by the user / operator.**
- **DO NOT operate the appliance without the legs supplied fitted.**

KW COMMERCIAL KITCHEN
Distributed by KW Commercial Kitchen | 1300 001 366
www.kwcommercial.com.au | sales@kwcommercial.com.au

Model Numbers Covered in this Specification

GP[1]8450G - [2]	Gas Griddle 450mm wide Bench Model.
GP[1]8450G - [2]	Gas Griddle 450mm wide with Cabinet Base.
GP[1]8450G - [2]	Gas Griddle 450mm wide on Leg Stand.
GP[1]8600G - [2]	Gas Griddle 600mm wide Bench Model.
GP[1]8600G - [2]	Gas Griddle 600mm wide with Cabinet Base.
GP[1]8600G - [2]	Gas Griddle 600mm wide on Leg Stand.
GP[1]8900G - [2]	Gas Griddle 900mm wide Bench Model.
GP[1]8900G - [2]	Gas Griddle 900mm wide with Cabinet Base.
GP[1]8900G - [2]	Gas Griddle 900mm wide on Leg Stand.
GP[1]8900G - [2]	Gas Griddle 900mm wide with Refrigerated Base.
GP[1]8120G - [2]	Gas Griddle 1200mm wide Bench Model.
GP[1]8120G - [2]	Gas Griddle 1200mm wide with Cabinet Base.
GP[1]8120G - [2]	Gas Griddle 1200mm wide on Leg Stand.
GP[1]8120G - [2]	Gas Griddle 1200mm wide with Refrigerated Base.

NOTE:

[1]: - Model Options;

- \- Standard Models.
- L - Low Back Models.
- B - Bold Front.
- LB - Low Back and Bold Front.

[2] - Base Stand Options;

- B - Bench Mount.
- CB - Cabinet Base.
- LS - Leg Stand.
- RB - Refrigerated Base (GP8900G and GP8120G Series only).

General

A commercial heavy duty, fully modular, gas fired griddle using a thermostatic burner system and fitted with aluminised steel burners with full pilot and flame failure protection and piezo ignition. It uses a 20mm thick griddle plate with the option of either ribbed or chromed mirror plate options.

All UK Chrome Plate and optional All Other models are fitted with an overtemp device which isolates the gas supply to burners should gas control system or thermostat malfunction, thus preventing overheating of the griddle.

The Griddle is constructed as a hob unit and is available in 4 options, on Leg Stand (-LS), Bench Mount (-B), Cabinet Base (-CB) or with Refrigerated Base (RB) models (Available for GP8900G and GP8120G Models only).

KW COMMERCIAL KITCHEN
Distributed by KW Commercial Kitchen | 1300 001 366
www.kwcommercial.com.au | sales@kwcommercial.com.au

Gas Supply Requirements

- Australia

	Natural Gas				LP Gas (Propane)			
	GP8450G	GP8600G	GP8900G	GP8120G	GP8450G	GP8600G	GP8900G	GP8120G
Input Rating (N.H.G.C.)	40 MJ/hr	53 MJ/hr	80 MJ/hr	108 MJ/hr	40 MJ/hr	53 MJ/hr	80 MJ/hr	108 MJ/hr
Supply Pressure	1.13 - 3.40 kPa				2.75 - 4.50 kPa			
Burner Operating Pressure (*)	0.90 kPa	0.85 kPa	0.90 kPa		2.6 kPa	2.5 kPa	2.6 kPa	
Gas Connection	¾" BSP Male							

- New Zealand Only:

	Natural Gas				LP Gas			
	GP8450G	GP8600G	GP8900G	GP8120G	GP8450G	GP8600G	GP8900G	GP8120G
Input Rating (N.H.G.C.)	40 MJ/hr	53 MJ/hr	80 MJ/hr	108 MJ/hr	40 MJ/hr	53 MJ/hr	80 MJ/hr	108 MJ/hr
Supply Pressure	1.13 - 3.40 kPa				2.75 - 4.50 kPa			
Burner Operating Pressure (*)	0.90 kPa	0.85 kPa	0.90 kPa		2.6 kPa	2.5 kPa	2.6 kPa	
Gas Connection	¾" BSP Male							

- UK Only:

Category: **II_{2H3P}(20, 37).**
Flue Type: **$A_{1.}$**

	Natural Gas (G20)				Propane (G31)			
	GP8450G	GP8600G	GP8900G	GP8120G	GP8450G	GP8600G	GP8900G	GP8120G
Heat Input (nett)	10.5 kW	13.3 kW	21 kW	28.5 kW	10.5 kW	13.3 kW	21 kW	28.5 kW
Gas Rate (nett)	1.11 m^3/hr	1.41 m^3/hr	2.22 m^3/hr	3.02 m^3/hr	0.81 kg/hr	1.03 kg/hr	1.63 kg/hr	2.21 kg/hr
Supply Pressure	20 mbar				37 mbar			
Burner Operating Pressure (*)	8.2 mbar	8.5 mbar	8.2 mbar		26 mbar			
Gas Connection	$^3/_4$" BSP Male							

*** - Measure burner operating pressure at gas control valve outlet test point with burner operating at 'High' setting. Operating pressure is ex-factory set, through the appliance regulator and not to be adjusted, apart from when converting between gases, if required. (Refer to 'Gas Conversion' section for details).**

For Refrigeration Cabinet Specifications refer to Refrigeration Cabinet Installation and Operation Manual supplied with appliance.

KW COMMERCIAL KITCHEN
Distributed by KW Commercial Kitchen | 1300 001 366
www.kwcommercial.com.au | sales@kwcommercial.com.au

- All Other Markets

	Natural Gas				Town Gas (**)			
	GP8450G	GP8600G	GP8900G	GP8120G	GP8450G	GP8600G (***)	GP8900G	GP8120G
Input Rating (N.H.G.C.)	40 MJ/hr	53 MJ/hr	80 MJ/hr	108 MJ/hr	40 MJ/hr	53 MJ/hr	80 MJ/hr	108 MJ/hr
Supply Pressure	1.13 - 3.40 kPa				0.75 - 1.50 kPa			
Burner Operating Pressure (*)	0.90 kPa	0.85 kPa	0.90 kPa		0.45 kPa			
Gas Connection	¾" BSP Male							

	LP Gas (Propane)				Butane			
	GP8450G	GP8600G	GP8900G	GP8120G	GP8450G	GP8600G	GP8900G	GP8120G
Input Rating (N.H.G.C.)	40 MJ/hr	53 MJ/hr	80 MJ/hr	108 MJ/hr	40 MJ/hr	53 MJ/hr	80 MJ/hr	108 MJ/hr
Supply Pressure	2.75 - 4.50 kPa				2.75 - 4.50 kPa			
Burner Operating Pressure (*)	2.6 kPa	2.5 kPa	2.6 kPa		2.6 kPa	2.5 kPa	2.6 kPa	
Gas Connection	¾" BSP Male							

(*) NOTE:

- **(*) Measure burner operating pressure at at gas valve outlet test point with burner operating at 'High Flame' setting.**
- **NAT, LPG & Butane Only - Operating pressure is ex-factory set and is not to be adjusted, unless when converting between gases, if required.**
- **(**) TOWN GAS Only - Adjust burner operating pressure using adjustable gas regulator supplied.**
- **(***) - GP8600G Town Gas model is available ex-factory on request only.**
- **Refer to 'Gas Conversion and Specifications' section in this manual for further details.**

Gas Connection

Bench Models

Gas supply connection point is located at rear of appliance, approximately 130mm from right hand side, 32mm from rear, 55mm from floor and is reached from rear of appliance. (Refer to 'Dimensions' section).

Connection is ¾" BSP male (For all other models).

All Other Models

Gas supply connection point is located at rear of appliance, approximately 130mm from right hand side, 32mm from rear, 655mm from floor and is reached from beneath appliance. (Refer to 'Dimensions' section).

Connection is ¾" BSP male (For all other models).

KW COMMERCIAL KITCHEN
Distributed by KW Commercial Kitchen | 1300 001 366
www.kwcommercial.com.au | sales@kwcommercial.com.au

Dimensions

Bench Models

(R) = Rating Plate Location for this option.

GP(L)8450G - B

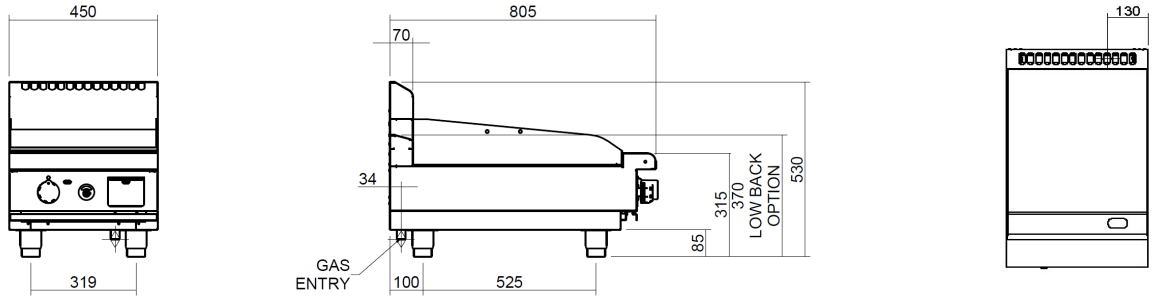

GP(L)8600G - B

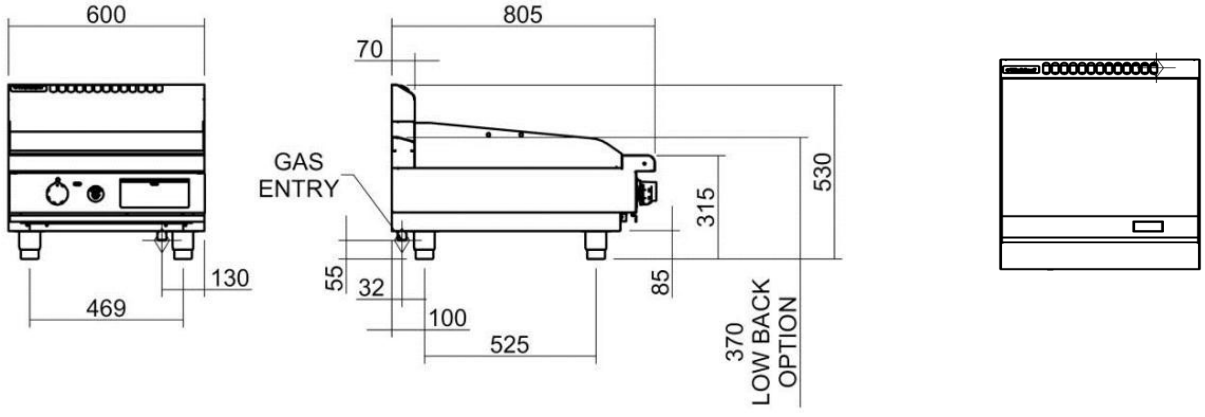

GP(L)8900G - B

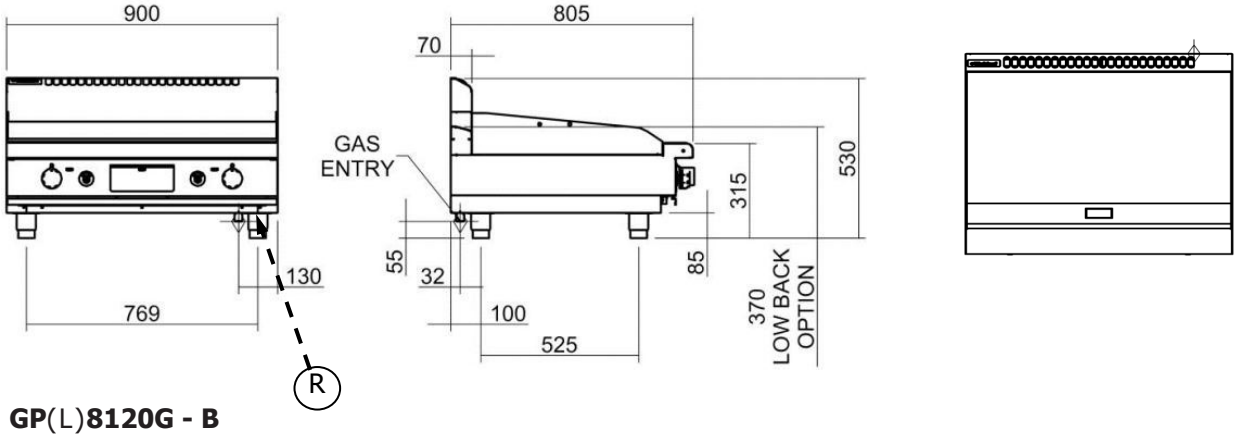

GP(L)8120G - B

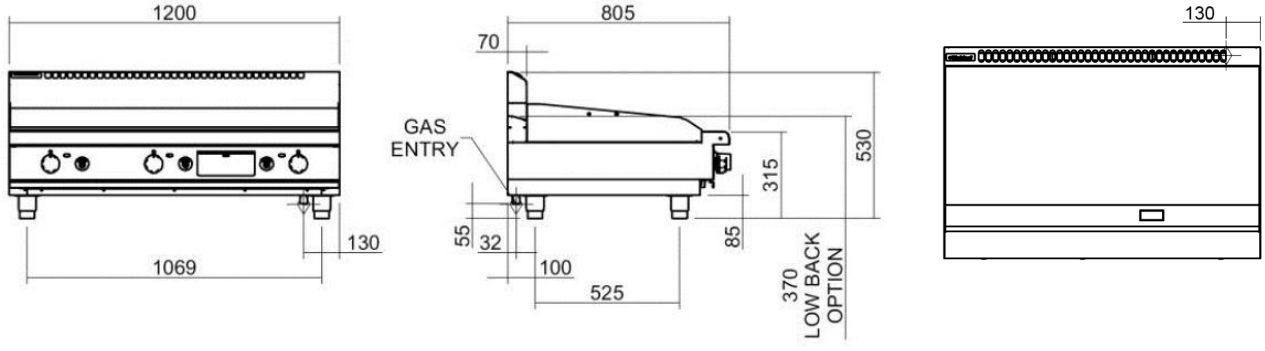

KW COMMERCIAL KITCHEN
Distributed by KW Commercial Kitchen | 1300 001 366
www.kwcommercial.com.au | sales@kwcommercial.com.au

Cabinet Base Models

Ⓡ = Rating Plate Location for this option.

GP(L)8450G - CB

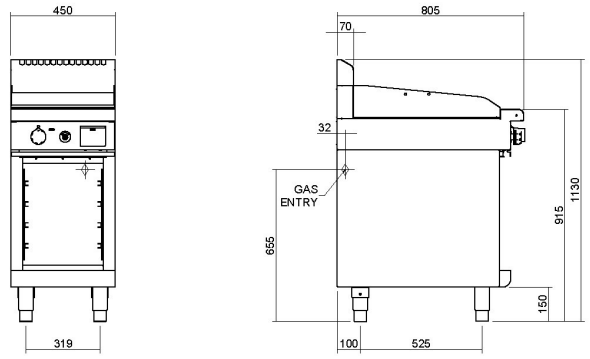

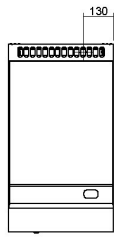

GP(L)8600G - CB

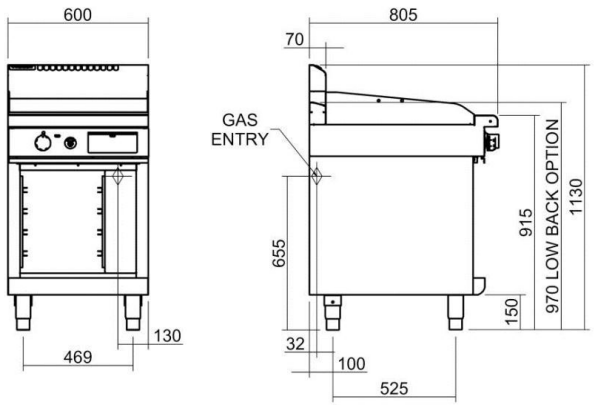

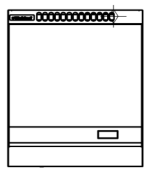

GP(L)8900G - CB

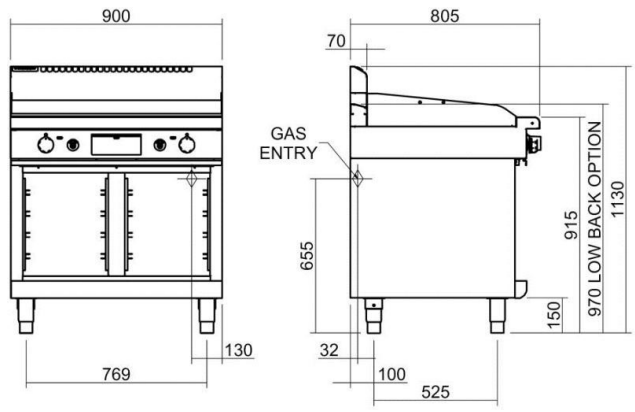

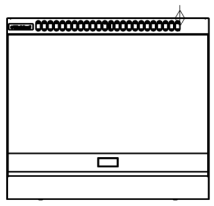

GP(L)8120G - CB

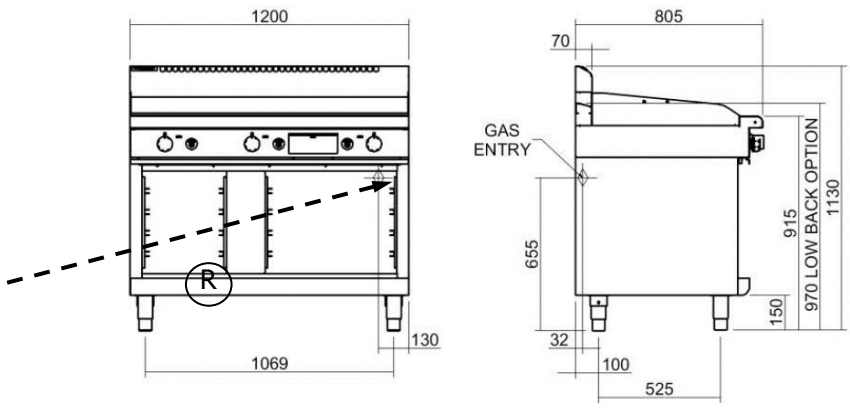

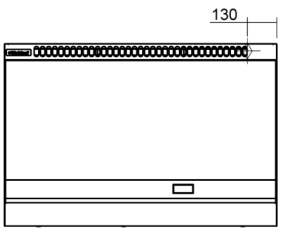

KW COMMERCIAL KITCHEN
Distributed by KW Commercial Kitchen | 1300 001 366
www.kwcommercial.com.au | sales@kwcommercial.com.au

Leg Stand Models

Ⓡ = Rating Plate Location for this option.

GP(L)8450G - LS

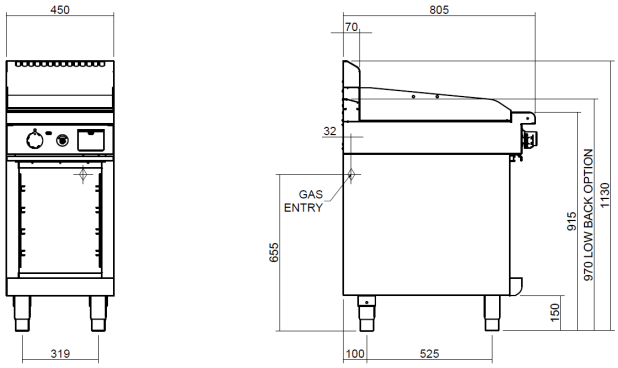

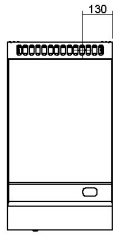

GP(L)8600G - LS

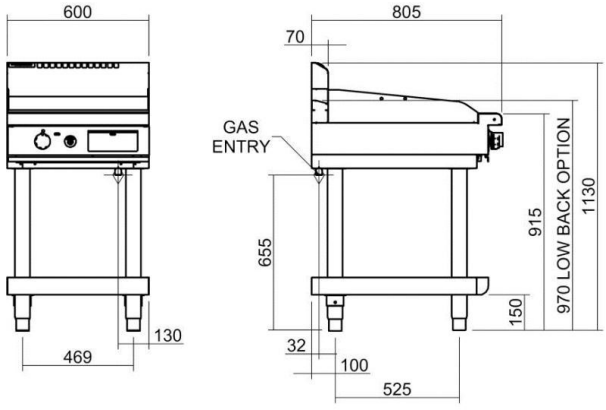

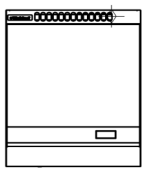

GP(L)8900G - LS

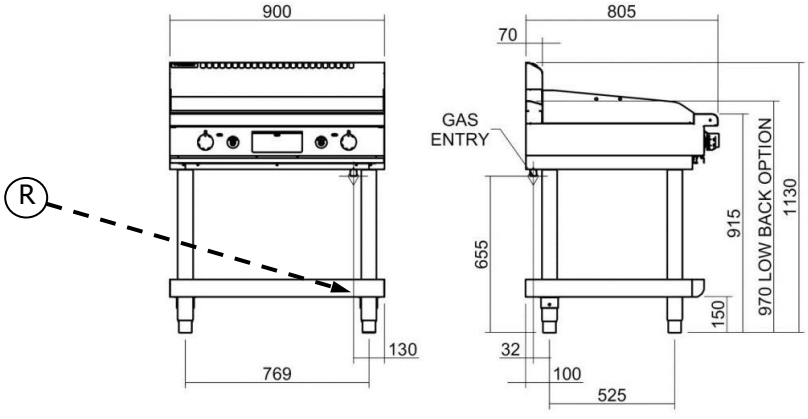

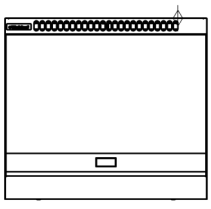

GP(L)8120G - LS

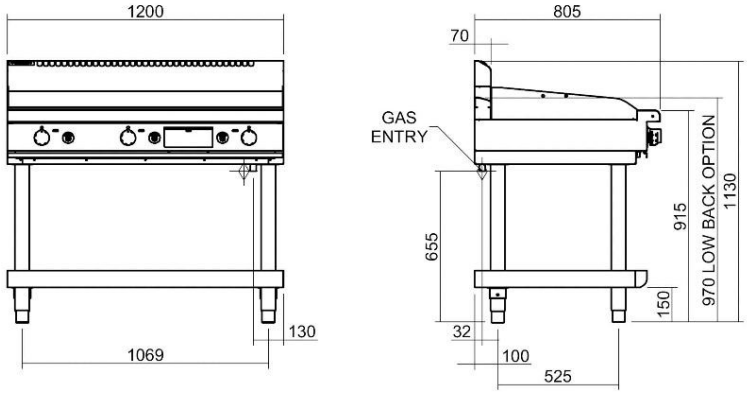

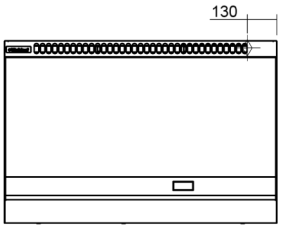

KW COMMERCIAL KITCHEN
Distributed by KW Commercial Kitchen | 1300 001 366
www.kwcommercial.com.au | sales@kwcommercial.com.au

Refrigeration Base Models

(R) = Rating Plate Location for this option.

GP(L)8900G - RB

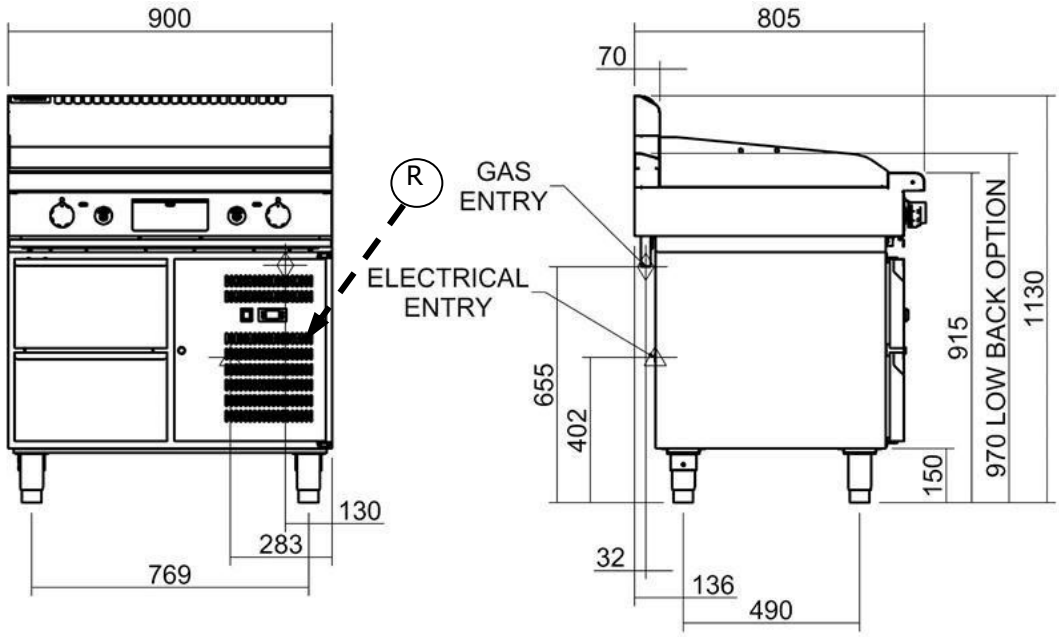

GP(L)8120G - RB

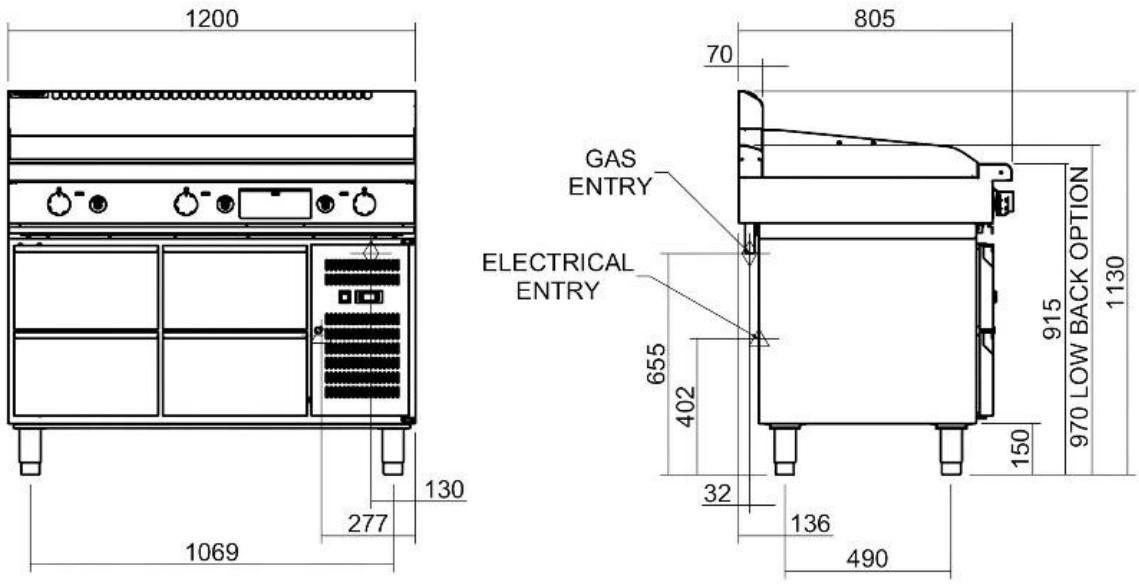

Distributed by KW Commercial Kitchen | 1300 001 366
www.kwcommercial.com.au | sales@kwcommercial.com.au

Installation Requirements

NOTE:

- **It is most important that this appliance is installed correctly and that operation is correct before use. Installation shall comply with local gas, health and safety requirements.**
- **This appliance shall be installed with sufficient ventilation to prevent occurrence of unacceptable concentrations of health harmful substances in the room, appliance is installed in.**

Waldorf Gas Griddles are designed to provide years of satisfactory service and correct installation is essential to achieve the best performance, efficiency and trouble-free operation.
This appliance must be installed in accordance with National installation codes and in addition, in accordance with relevant National / Local codes covering gas and fire safety.

Australia:	- AS5601	- Gas Installations.
New Zealand:	- NZS5261	- Gas Installation.
United Kingdom:		- Gas Safety (Installation & Use) Regulations 1998.
		- BS6173 - Installation of Catering Appliances.
		- BS5440 - 1 & 2 Installation Flueing & Ventilation.
Ireland:	- IS 820	- Non - Domestic Gas Installations.

Installations must be carried out by qualified persons only. Failure to install equipment to the relevant codes and manufacturer's specifications shown in this section will void the warranty.

Components having adjustments protected (e.g. paint sealed) by the manufacturer are only to be adjusted by an authorised service agent. They are not to be adjusted by the installation person.

Unpacking

- Remove all packaging and transit protection from appliance including all protective plastic coating from exterior stainless steel panels.
- Check equipment and parts for damage. Report any damage immediately to carrier and distributor.
- Ensure the 4 adjustable feet are securely fitted.
- Report any deficiencies to distributor who supplied appliance.
- Check available gas supply is correct to that shown on rating plate located behind front control panel and on inner face of right hand panel.

Location

1. Installation must allow for sufficient flow of fresh air for combustion air supply.
2. Installation must include adequate ventilation means, to prevent dangerous build up of combustion products.

Combustion Air Requirements:				
	GP513	**GP514**	**GP516**	**GP518**
Natural Gas	10.5m^3/hr	14m^3/hr	21m^3/hr	28m^3/hr
LPG / Butane	11m^3/hr	15m^3/hr	22m^3/hr	29m^3/hr
Town Gas	10.5m^3/hr	14m^3/hr	21m^3/hr	28m^3/hr

3. Any gas burning appliance requires adequate clearance and ventilation for optimum and trouble-free operation. Minimum installation clearances shown overleaf are to be adhered to.
4. Position appliance in its approximate working position.
5. All air for burner combustion is supplied from beneath the unit. Legs must always be fitted and no obstructions placed on beneath or around base of appliance, as obstructions will cause incorrect operation and / or failure of appliance.
6. Components having adjustments protected (e.g. paint sealed) by manufacturer are only to be adjusted by an authorised service agent. They are not to be adjusted by the installation person.

NOTE: Do not obstruct or block appliance flue. Never directly connect a ventilation system to appliance flue outlet.

KW COMMERCIAL KITCHEN
Distributed by KW Commercial Kitchen | 1300 001 366
www.kwcommercial.com.au | sales@kwcommercial.com.au

Clearances

NOTE: Only non-combustible materials can be used in close proximity to this appliance.

Any gas burning appliance requires adequate clearance and ventilation for optimum and trouble-free operation. The following minimum installation clearances are to be adhered to:

	Combustible Surface	Non Combustible Surface
Left / Right Hand Side	50mm	0mm
Rear	50mm	0mm

Assembly

This model is delivered completely assembled. Ensure legs are securely attached.

NOTE:

- **This appliance is fitted with adjustable feet to enable it to be positioned securely and level on uneven floors. This should be carried out on completion of gas connection. Refer to 'Gas Connection Section'.**

- **This appliance can also be fitted with rear rollers to enable appliance to be easily moved for positioning and cleaning purposes. If desired, rollers are supplied in the packaging, with the appliance. See below for fitting instructions.**

Optional Accessories (Refer to Replacement Parts List)

- Plinth Kit. For installation details, refer to instructions supplied with each kit.

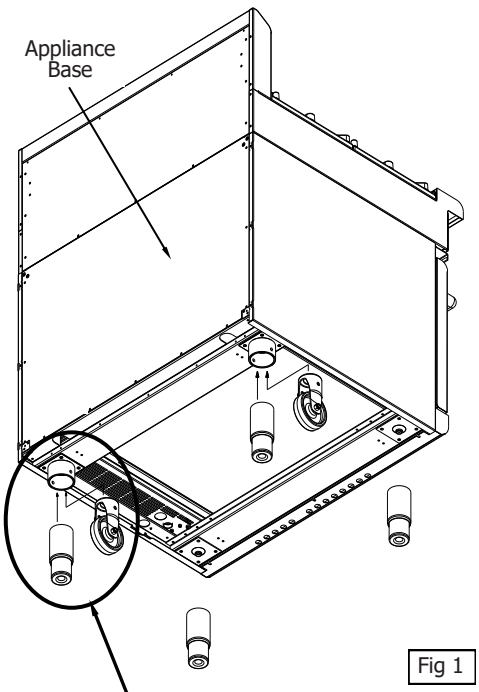

Fig 1

Fitting Rear Rollers.

1. Raise appliance from floor by approx. 75mm using suitable lifting equipment (i.e. Palletiser / Forklift) to allow rear adjustable feet to be removed.
2. Unscrew and remove both rear adjustable feet from rear leg housings.
3. Fit rear roller to rear leg housing and align screw hole in side of rear leg housing with threaded hole in rear roller.
4. Secure rear roller to leg support with bolt supplied and tighten bolt using a 10mm A/F spanner.
5. Fit second roller and tighten.
6. Lower appliance back to floor and adjust front adjustable feet to level appliance.

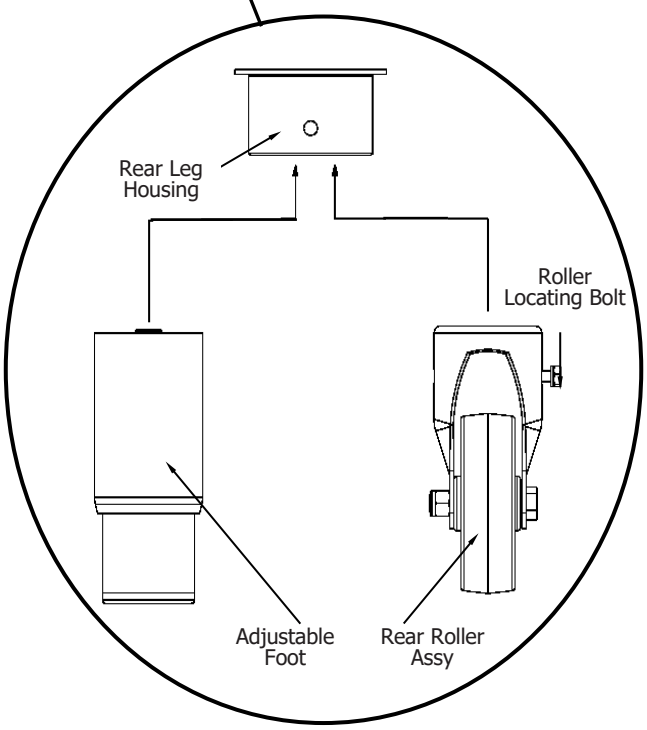

COMMERCIAL KITCHEN
Distributed by KW Commercial Kitchen | 1300 001 366
www.kwcommercial.com.au | sales@kwcommercial.com.au

Gas Connection

NOTE: ALL GAS FITTING MUST ONLY BE CARRIED OUT BY AN QUALIFIED PERSON.

1. Waldorf Gas Griddles do not require an electrical connection, as they function totally on the gas supply only.
2. It is essential that the gas supply is correct for the appliance to be installed and that adequate supply pressure and volume is available. The following checks should therefore be made before installation:-

   a. **Gas Type** the appliance has been supplied for is shown on coloured stickers located above the gas connection and next to the rating plate. Check that this is correct for the gas supply the appliance is being installed for. The gas conversion procedure is detailed in this manual.

   b. **Supply Pressure** required for this appliance is shown in the "Specifications" section of this manual. Check the gas supply to ensure adequate supply pressure exists.

   c. **Input Rate** of this appliance is stated on the Rating Plate, refer to the 'Dimensions' section for rating plate locations for the different models. The input rate should be checked against the available gas supply line capacity. **Particular note should be taken if the appliance is being added to an existing installation.**

Fig 2

NOTE: It is important that adequately sized piping runs directly to the connection joint on the appliance with as few tees and elbows as possible to give maximum supply volume.

3. Fit the gas regulator supplied, into the gas supply line as close to the appliance as possible.

NOTE: Gas pressure regulator provided with this appliance is convertible between Natural Gas and LPG as per 'Gas Conversion Section' in this manual.
Ensure regulator is converted to correct gas type that appliance will operate on.
Regulator outlet pressure is fixed ex-factory for gas type that regulator is converted to and it is <u>NOT to be adjusted</u>.

Regulator connections are $^3/_4$" BSP female.
Connection to appliance is $^3/_4$" BSP male.
(Refer to 'Specifications' section for gas supply location dimensions).

NOTE: A Manual Isolation Valve must be fitted to the individual appliance supply line.

4. Correctly locate appliance into its final operating position and using a spirit level, adjust legs so that unit is level and at correct height.
5. Connect gas supply to appliance. A suitable jointing compound which resists breakdown action of LPG must be used on every gas line connection, unless compression fittings are used.
6. Check all gas connections for leakages using soapy water or other gas detecting equipment.

Warning

DO NOT USE A NAKED FLAME TO CHECK FOR GAS LEAKAGES.

KW COMMERCIAL KITCHEN
Distributed by KW Commercial Kitchen | 1300 001 366
www.kwcommercial.com.au | sales@kwcommercial.com.au

7. Check gas operating pressure is as shown in 'Specifications' section.

NOTE: Operating pressure is to be measured at burner operating pressure test point outlet and with one griddle burner operating at the 'High Flame' setting.

8. Verify operating pressure remains correct.

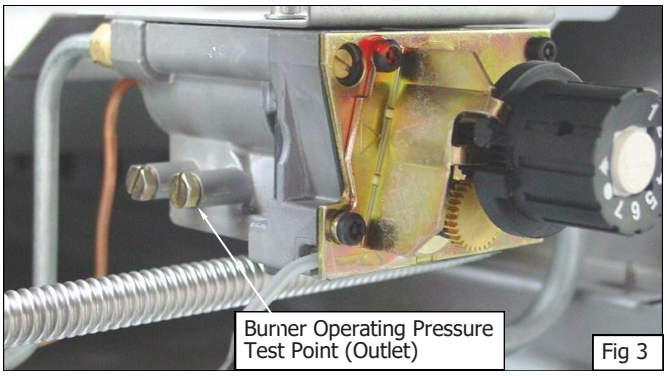

Fig 3

Commissioning

Before leaving the new installation;

Check the following functions as shown in operating instructions specified in 'Operation' section of this manual.

- Light the Pilot Burner.
- Light the Main Burner.
- Turning 'Off' the Main Burner / Pilot.

Ensure operator has been instructed in areas of correct lighting, operation, and shutdown procedure for appliance.

This manual must be kept by owner for future reference and a record of ***Date of Purchase, Date of Installation*** and ***Serial Number of Appliance*** must be recorded and kept with this manual. **(These details can be found on Rating Plate, refer to 'Dimensions' section for locations of Rating Plate for different applications. Also refer to 'Gas Connection' section)**.

NOTE: If for some reason it is not possible to get appliance to operate correctly, shut 'Off' gas supply and contact supplier of this appliance.

For Refrigeration Cabinet Installation refer to Refrigeration Cabinet Installation and Operation Manual supplied with appliance.

KW COMMERCIAL KITCHEN
Distributed by KW Commercial Kitchen | 1300 001 366
www.kwcommercial.com.au | sales@kwcommercial.com.au

Operation Guide

Caution

- **This appliance is for professional use and is only to be used by qualified persons.**
- **Only authorised service persons are to carry out installation, servicing or gas conversion operations.**
- **Components having adjustments protected (e.g. paint sealed) by the manufacturer should not be adjusted by the user / operator.**

1. Waldorf Gas Griddles have been designed to provide simplicity of operation and 100% safety protection.
2. Improper operation is therefore almost impossible, however bad operation practices can reduce the life of the gas griddle and produce a poor quality product. To use this appliance correctly please read the following sections carefully:-

   - Lighting the Pilot Burner.
   - Lighting the Main Burner.
   - Re-Setting the Overtemp Device.
   - Turning 'Off' the Main Burner / Pilot.

Description of Controls

Fig 4

Gas Griddle Controls

○ OFF Position

PILOT Burner

Temperature Gradient

Piezo Igniter with Viewing Hole

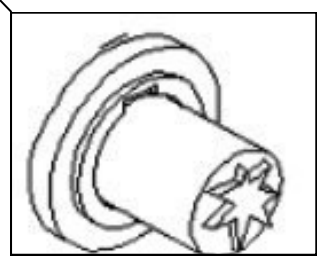

KW COMMERCIAL KITCHEN
Distributed by KW Commercial Kitchen | 1300 001 366
www.kwcommercial.com.au | sales@kwcommercial.com.au

Lighting Pilot Burner

These griddles are fitted with a pilot as a standard option and flame failure protection, which is incorporated for each main burner, by way of a thermo-electric system. Flame failure protection will shut off gas supply to that burner should the pilot for that burner go out, so that un-burnt gas is not expelled. ***This is an important safety feature which is slowly becoming law throughout the world***.

1. Partially depress gas control knob whilst turning anti-clockwise to 'Pilot' position. **DO NOT fully depress Gas Control Knob whilst trying to rotate anti-clockwise as Knob and Gas Valve will be damaged.**
2. With gas control knob in 'Pilot' position, keep knob depressed whilst pressing piezo igniter button. (Each press of piezo igniter button will generate a single spark).
3. Hold gas control knob depressed for approx. 10-15 seconds, then release. Pilot burner should remain alight. (If pilot does not light, repeat Items 1 to 3 above).
4. Pilot ignition can be viewed through opening in plastic surround of piezo igniter button.

NOTE: If pilot burner goes out during normal operation wait 5 minutes before re-lighting.

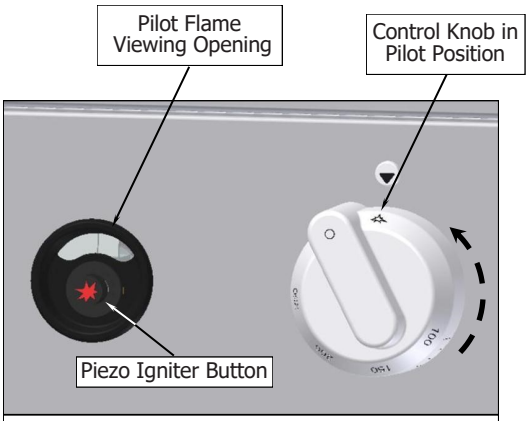

Depress and Rotate Anti-Clockwise to Pilot Position

Lighting Main Burner

1. Ensure pilot burner is alight.
2. Rotate gas control knob anti-clockwise to desired temperature marked on knob.
3. Main burner will ignite automatically, from pilot burner.

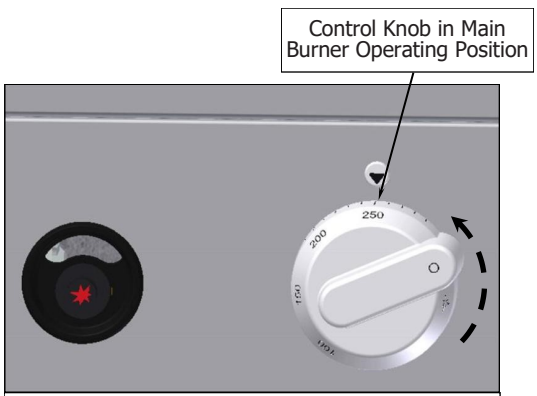

Rotate Anti-Clockwise to Operating Temperature

Turning 'Off' Main Burner / Pilot

NOTE: DO NOT attempt to rotate Gas Control Knob anti-clockwise back to 'O' Off position as Knob and Gas Valve will be damaged.

1. Rotate gas control knob clockwise to 'Pilot' position. Main burner will extinguish and pilot burner will remain alight.
2. To turn 'Off' main burner completely, ***partially depress*** gas control knob whilst turning clock-wise to 'O' Off position, pilot burner will extinguish. **DO NOT fully depress Gas Control Knob whilst trying to rotate clockwise to 'O' Off position as Knob and Gas Valve will be damaged.**

Rotate Clockwise to Pilot Position - Then Partially Depress and Rotate to 'O' Off Position.

KW COMMERCIAL KITCHEN
Distributed by KW Commercial Kitchen | 1300 001 366
www.kwcommercial.com.au | sales@kwcommercial.com.au

Re-Setting Overtemp Device (All UK Chrome Plate and optional All Other models).

This griddle is fitted with an overtemp device which isolates gas supply to burners should gas control system or thermostat malfunction, thus preventing griddle overheating. If pilot fails to ignite after several attempts, check the overtemp to ensure that it has not tripped.

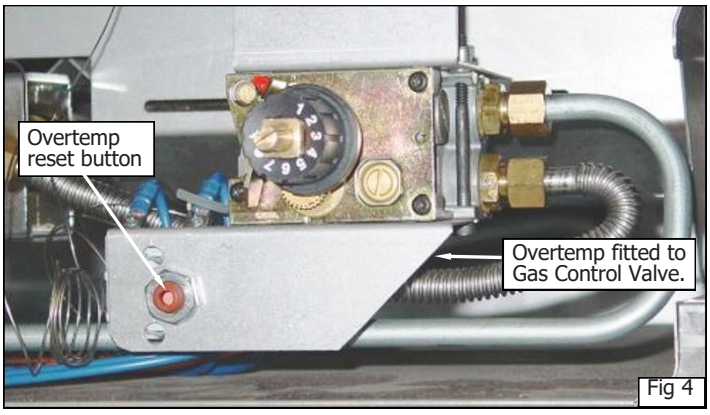

Fig 4

1. To reset overtemp, remove gas control knobs from front of griddle. These are a push fit onto spindle of gas valves.
2. Slacken 2 screws securing front control panel and carefully remove control panel, ensuring that leads to piezo igniter are disconnected from rear of piezo buttons.
3. Using a small screwdriver, depress centre of overtemp reset button.
4. Re-connect piezo igniter leads to rear of piezo igniter buttons.
5. Refit front control panel onto griddle and secure in position with the 2 securing screws.
6. Refit gas control knobs to gas spindles.
7. Attempt to re-light pilot burners as shown above. Should pilot burners still not ignite, call a qualified service person to investigate problem.

IMPORTANT:

Should any abnormal operation like;

- **ignition problems,**
- **abnormal burner flame,**
- **burner control problems,**
- **partial or full loss of burner flame in normal operation, be noticed, appliance requires IMMEDIATE service by a qualified service person and should not be used until such service is carried out.**

For Refrigeration Cabinet Operation refer to Refrigeration Cabinet Installation and Operation Manual supplied with appliance.

KW COMMERCIAL KITCHEN
Distributed by KW Commercial Kitchen | 1300 001 366
www.kwcommercial.com.au | sales@kwcommercial.com.au

General

Caution

Always turn 'Off' gas supply before cleaning.

This appliance is not water proof.

Do not use water jet spray to clean interior or exterior of this appliance.

Clean griddle regularly. A clean appliance looks better, will last longer and will perform better. Carbonised grease on surface or on griddle plate will hinder transfer of heat from cooking surface to food. This will result in loss of cooking efficiency.

NOTE: Each Heavy Duty Griddle is supplied with a scraper tool and a pack of blades for cleaning griddle surface.
- **1 Flat Blade (pack) - 1 Ribbed Blade (pack) and 2 handles for Ribbed Heavy Duty Griddle.**
- **1 Flat Blade (pack) and I handle for Smooth Heavy Duty Griddle.**

NEVER use the ribbed scraper blade on flat chrome surfaced griddle plate.

Warning

BLADES FITTED TO SCRAPER TOOL ARE EXTREMELY SHARP AND ARE TO BE USED WITH CARE.

Replacement blades and handles can be purchased separately. Refer to 'Replacement Parts List' at rear of manual.

DO NOT use water on griddle plate while this item is still hot as warping and cracking may occur. Allow griddle plate to cool down before cleaning.

NOTE:
- **DO NOT use abrasive detergents, strong solvents or caustic detergents as they could corrode or damage the griddle.**
- **To prevent rust forming on griddle plate (Steel Plate), ensure that any detergent or cleaning material has been completely removed after each cleaning. Appliance should be switched 'On' briefly to ensure that griddle plate becomes dry. Spread oil or grease over griddle surface to form a thin protective greasy film.**

To keep your griddle clean and operating at peak efficiency, follow procedures shown below:-

After Each Use

Caution

Always apply even pressure over whole surface of scraper tool when using on flat surface of griddle, to prevent scoring of griddle surface.

NEVER bang sharp edge of scraper tool on flat surface of griddle as this will damage griddle and invalidate the warranty.

1. Clean griddle with supplied scraper tools to remove any food debris.
2. Always ensure that scraper tool blades are changed regularly to ensure that scraper tool works efficiently and prevents damage to griddle plate surface.

KW COMMERCIAL KITCHEN
Distributed by KW Commercial Kitchen | 1300 001 366
www.kwcommercial.com.au | sales@kwcommercial.com.au

Daily Cleaning

1. The grease drawer should be checked and emptied frequently to prevent overflow and spillage. Remove grease drawer while still warm so that grease is in a liquid state. Empty any grease from drawer and wash thoroughly in same manner as any cooking utensil.
2. Clean Control Panel with a damp cloth lightly moistened with a solution of mild detergent and water.
3. Thoroughly clean splash back, interior and exterior surfaces of griddle with hot water, a detergent solution and a soft scrubbing brush.
4. Brush griddle surface with a soft bristled brush. Any carbon deposits should be removed using supplied scraper tool followed by wiping with a cloth to prevent accumulation of food deposits.
5. Dry griddle thoroughly with a dry cloth and polish with a soft dry cloth.

NOTE: Chrome Griddle Plate; DO NOT use abrasive detergents, strong solvents or caustic detergents as they could corrode or damage the chrome plate.

Weekly Cleaning

NOTE:

- **If griddle usage is very high, we recommend that weekly cleaning procedure is done more frequently.**
- **Ensure protective gloves are worn during cleaning process.**
- **DO NOT use harsh abrasive detergents, strong solvents or caustic detergents as they will damage griddle and burners.**
- **DO NOT use water on griddle plates while they are still hot as warping may occur. Allow castings to cool and then remove for cleaning.**

Griddle - Steel Plate

NOTE: In order to prevent rust forming on griddle plate, ensure that all detergent and cleaning material has been entirely removed after each cleaning process. Appliance should be switched 'On' briefly to ensure griddle plate becomes dry. Oil or grease should be spread over griddle surface to form a thin protective greasy film.

a. Remove and clean grease collection drawer frequently to prevent over spills.
b. Clean griddle surface thoroughly with supplied scraper tool or a wire brush. If necessary use a griddle stone or a scotch bright pad on griddle surface to remove stubborn or accumulated carbon deposits..
c. Occasionally bleach griddle plate with vinegar when plate is cold.
d. Clean with hot water, a mild detergent solution and a scrubbing brush. Dry all components thoroughly with a dry cloth.
e. Griddle should be switched 'On' briefly to ensure griddle plate becomes dry. Spread a thin smear of cooking oil over griddle to form a protective film.

Griddle - Chrome Plate

Caution

Always ensure that even pressure is applied over whole surface of scraper tool when using on flat surface of griddle, to prevent scoring of griddle surface.

NEVER bang sharp edge of scraper tool on flat surface of griddle as this will damage griddle and invalidate the warranty.

NOTE: To maintain the finish on the chrome griddle plate, ensure that all detergent and cleaning material has been entirely removed after each cleaning process. Appliance should be switched 'On' briefly to ensure griddle plate becomes dry.

a. Remove and clean the grease collection drawer frequently to prevent over spills.
b. Clean griddle surface thoroughly with supplied scraper tool.
c. Allow griddle plate to cool, then clean plate with a scrubbing brush, a mild non-abrasive detergent and water.
d. Occasionally bleach griddle plate with vinegar when cold.
e. Dry griddle thoroughly with a dry cloth and polish with a soft dry cloth.
f. Griddle should be switched 'On' briefly to ensure griddle plate becomes dry.

KW COMMERCIAL KITCHEN
Distributed by KW Commercial Kitchen | 1300 001 366
www.kwcommercial.com.au | sales@kwcommercial.com.au

Griddle Cooking Area

a. Clean griddle cooking area with a soft cloth and a mild detergent and hot water solution.
b. Baked on deposits or discolouration may require a good quality stainless steel cleaner or stainless steel wool. Always apply cleaner when appliance is cold and rub in direction of grain.
c. Remove grease drawer and clean with a mild anti bacterial detergent and hot water solution using a soft bristled brush. Dry grease drawer thoroughly with a dry cloth.

Stainless Steel Surfaces

a. Clean exterior surfaces of griddle with hot water, a mild detergent solution and a soft scrubbing brush. Note gas control knobs are a push fit onto gas control valve spindles and can be removed to clean the control panel.
b. Baked on deposits or discolouration may require a good quality stainless steel cleaner or stainless steel wool. Always apply cleaner when appliance is cold and rub in direction of grain.
c. To remove any discolouration, use an approved stainless steel cleaner or stainless steel wool. Always rub in direction of grain.
d. Dry grease tray thoroughly with a dry cloth.
e. Dry all components thoroughly with a dry cloth and polish with a soft dry cloth.

Periodic Maintenance

NOTE: All maintenance operations should only be carried out by a qualified service person.

To achieve the best results, cleaning must be regular and thorough and all controls and mechanical parts should be checked and adjusted periodically by a qualified service person. If any small faults occur, have them attended to promptly. Don't wait until they cause a complete breakdown. It is recommended that appliance is serviced every 6 months.

For the Refrigeration Cabinet Cleaning and Maintenance refer to the Refrigeration Cabinet Installation and Operation Manual supplied with the appliance.

KW COMMERCIAL KITCHEN
Distributed by KW Commercial Kitchen | 1300 001 366
www.kwcommercial.com.au | sales@kwcommercial.com.au

Fault Finding

This section provides an easy reference guide to the more common problems that may occur during operation of your equipment. The fault finding guide in this section is intended to help you correct, or at least accurately diagnose problems with your equipment.

Although this section covers the most common problems reported, you may encounter a problem not covered in this section. In such instances, please contact your local authorised service agent who will make every effort to help you identify and resolve the problem. Please note that the service agent will require the following information:-

- **Model Trade Name and Serial Number of Appliance. (both can be found on Technical Data Plate located on appliance. (Refer to 'Dimensions' section).**

Fault	Possible Cause	Remedy
Pilot won't light.	No gas supply. Blocked pilot injector.	Ensure gas isolation valve is turned 'On', and bottles are not empty. Call service provider.
Pilot goes out when gas control knob released.	Releasing knob before thermocouple has heated. Pilot flame too small. - Gas pressure too low. - Partially blocked pilot injector. Thermocouple faulty.	Hold knob in for at least 20 seconds following ignition of pilot. Call service provider. Call service provider.
Main burner will not light.	Incorrect supply pressure. Faulty gas control.	Call service provider. Call service provider.

NOTE: Components having adjustments protected (e.g. paint sealed) by the manufacturer, are only to be adjusted by an authorised service agent. They are not to be adjusted by an unauthorised service person.

For Refrigeration Cabinet Fault Finding details, refer to Refrigeration Cabinet Installation and Operation Manual supplied with appliance.

KW COMMERCIAL KITCHEN
Distributed by KW Commercial Kitchen | 1300 001 366
www.kwcommercial.com.au | sales@kwcommercial.com.au

Conversion Procedure

Caution

Ensure Appliance is isolated from gas supply before commencing servicing.

NOTE:

- **These conversions should only be carried out by qualified persons. All connections must be checked for leaks before re-commissioning appliance.**
- **Adjustment of components that have adjustments / settings sealed (e.g. paint sealed) can only be adjusted in accordance with following instructions and shell be re-sealed before re -commissioning this appliance.**
- **For all relevant gas specifications refer to 'Gas Specifications' table at end of this section.**

Main Burners

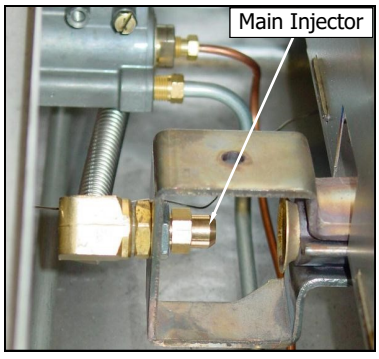

1. Remove the following:-
   - Gas control knobs.
   - Control Panel.
   - Disconnect electrical connection lead from rear of piezo igniters.
2. Remove main burner injectors and replace with correct size injectors as shown in 'Gas Specifications Tables' at rear of this section.

Pilot Burners

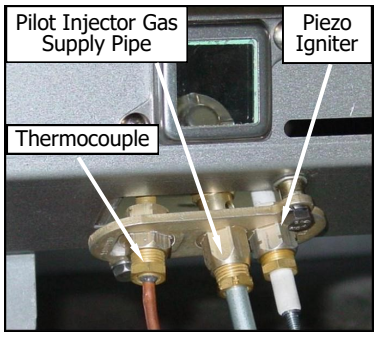

1. Carry out the following:-
   - Lead to piezo igniter.
   - Unscrew and remove piezo igniter.
   - Slacken gas supply tube at gas control end.
   - Disconnect gas supply tube to pilot burner.
2. Remove pilot injectors and replace with correct size injectors as shown in 'Gas Specifications Tables' at rear of this section.
3. Reconnect the following:-
   - Gas supply tube to pilot burner.
   - Tighten gas supply tube at gas control end.
   - Refit piezo igniter.
   - Re-connect lead to piezo igniter.

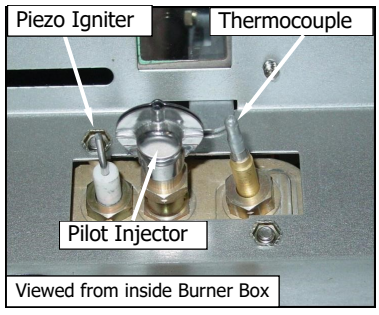

Low Fire Adjustment - (Gas Griddle)

To change gas griddle thermostat 'Low Fire' adjustment, low fire screw on gas control valve should be screwed fully in, then un-screwed by 1 full turn as shown in 'Gas Specifications' table at end of this section.

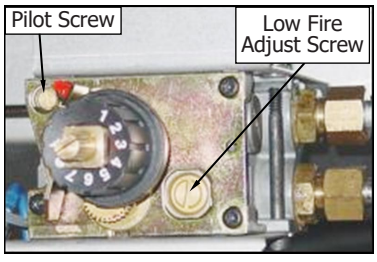

1. Screw 'Low Fire' screw fully 'IN' and then unscrew by **1 Full Turn** of 'Low Fire' screw. (Refer to 'Gas Specification' table at rear of this section).
2. Ensure Gas Control Pilot Screw is adjusted to 3 turns out c.c.w.
3. Refit control panel
4. Refit gas control knob.

NOTE: 'Low Fire Screw' should be sealed with coloured paint on completion of low fire adjustment.

KW COMMERCIAL KITCHEN
Distributed by KW Commercial Kitchen | 1300 001 366
www.kwcommercial.com.au | sales@kwcommercial.com.au

Gas Regulator

NOTE: Gas regulator supplied is convertible between Natural Gas and LP Gas, but it's outlet pressure is fixed ex-factory and is NOT to be adjusted.

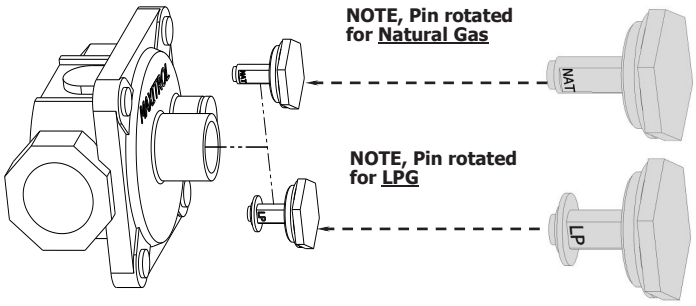

- Town Gas Only.

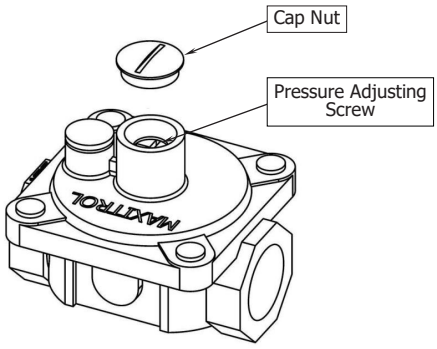

1. Remove slotted cap from regulator.
2. Turn 'On' gas supply and appliance.
3. Adjust pressure adjusting screw to achieve correct burner operating pressure.

NOTE: Measure burner operating pressure at gas valve outlet test point with burner operating at 'High Flame' setting.

4. Verify operating pressure remains correct (Re-adjust regulator if required).
5. Screw cap nut back onto regulator.

Gas Type Labels

On completion of gas conversion, replace gas type labels located at:-
- Rear of unit, above gas connection.
- Beside rating plate.

Commissioning

Before leaving installation;
1. Check all gas connections for leakage using soapy water or other gas detecting equipment.

Warning

DO NOT USE A NAKED FLAME TO CHECK FOR GAS LEAKAGES.

2. Carry out a 'Commissioning' check of appliance as shown in Installation Section of this manual.
3. Ensure any adjustments done to components that have adjustments / settings paint sealed are to be re-sealed.

NOTE: If for some reason it is not possible to get the appliance to operate correctly, shut 'Off' the gas supply and contact the supplier of this appliance.

KW COMMERCIAL KITCHEN
Distributed by KW Commercial Kitchen | 1300 001 366
www.kwcommercial.com.au | sales@kwcommercial.com.au

Gas Specifications

- Australia

	Natural Gas				LP Gas (Propane)			
	GP8450G	GP8600G	GP8900G	GP8120G	GP8450G	GP8600G	GP8900G	GP8120G
Main Burner Injector	3.00mm	3.60mm	3.00mm	2.85mm	1.80mm	2.10mm	1.80mm	1.70mm
Pilot Burner Injector	0.41				0.25			
Low Fire Adjustment	1 Turn 'Out' c.c.w.							
High Fire Adjustment (*)	Maximum Flow Screw. Fully In c.w.							
Burner Operating Pressure (**)	0.90 kPa	0.85 kPa	0.90 kPa		2.6 kPa	2.5 kPa	2.6 kPa	
Supply Pressure	1.13 - 3.40 kPa				2.75 - 4.50 kPa			
Gas Regulator Cap Screw								

- New Zealand

	Natural Gas				LP Gas			
	GP8450G	GP8600G	GP8900G	GP8120G	GP8450G	GP8600G	GP8900G	GP8120G
Main Burner Injector	3.00mm	3.60mm	3.00mm	2.85mm	1.80mm	2.10mm	1.80mm	1.70mm
Pilot Burner Injector	0.41				0.25			
Low Fire Adjustment	1 Turn 'Out' c.c.w.							
High Fire Adjustment (*)	Maximum Flow Screw. Fully In c.w.							
Burner Operating Pressure (**)	0.90 kPa	0.85 kPa	0.90 kPa		2.6 kPa	2.5 kPa	2.6 kPa	
Supply Pressure	1.13 - 3.40 kPa				2.75 - 4.50 kPa			
Gas Regulator Cap Screw								

(*) Gas Control Valve is fitted with a non adjustable maximum flow bypass blanking screw.

(**) Measure burner operating pressure at the gas control valve outlet test point with burner operating at 'High' setting. Operating pressure is ex-factory set, through appliance regulator and is not to be adjusted, apart from when carrying out gas conversion, if required. (Refer to 'Gas Conversion' information in this section for details).

KW COMMERCIAL KITCHEN
Distributed by KW Commercial Kitchen | 1300 001 366
www.kwcommercial.com.au | sales@kwcommercial.com.au

- UK Only

Category: **II_{2H3P}(20, 37).**
Flue Type: **$A_{1.}$**

	Natural Gas (G20)				Propane (G31)			
	GP8450G	GP8600G	GP8900G	GP8120G	GP8450G	GP8600G	GP8900G	GP8120G
Main Burner Injector	3.00mm	3.40mm	3.00mm	2.85mm	1.80mm	2.10mm	1.80mm	1.70mm
Pilot Burner Injector	0.41				0.25			
Low Fire Adjustment	1 Turn 'Out' c.c.w.							
High Fire Adjustment (*)	Maximum Flow Screw. Fully In c.w.							
Burner Operating Pressure (**)	8.2 mbar	8.5 mbar	8.2 mbar		26 mbar			
Supply Pressure	20 mbar				37 mbar			
Gas Regulator Cap Screw								

(*) Gas Control Valve is fitted with a non adjustable maximum flow bypass blanking screw.

(**) Measure burner operating pressure at the gas control valve outlet test point with burner operating at 'High' setting. Operating pressure is ex-factory set, through appliance regulator and is not to be adjusted, apart from when carrying out gas conversion, if required. (Refer to 'Gas Conversion' information in this section for details).

KW COMMERCIAL KITCHEN
Distributed by KW Commercial Kitchen | 1300 001 366
www.kwcommercial.com.au | sales@kwcommercial.com.au

- All Other Markets

	Natural Gas				Town Gas (**)			
	GP8450G	GP8600G	GP8900G	GP8120G	GP8450G	GP8600G (***)	GP8900G	GP8120G
Main Burner Injector	3.00	3.60	3.00	2.85	5.50	7.20	5.50	5.20
Pilot Burner Injector	0.41				0.75			
Low Fire Adjustment	1 Full Turn Counter Clockwise from the 'Fully In' Position.							
High Fire Adjustment	Maximum Flow Screw. 'Fully In' c.w.							
Burner Operating Pressure (*)	0.82 kPa	0.85 kPa	0.90 kPa		0.45 kPa			
Supply Pressure	1.13 - 3.40 kPa				0.75 - 1.50 kPa			
Gas Regulator Cap Screw					Adjustable Regulator *(Adjust to the Burner Operating* Pressure specified)			

	LP Gas (Propane)				Butane			
	GP8450G	GP8600G	GP8900G	GP8120G	GP8450G	GP8600G	GP8900G	GP8120G
Main Burner Injector	1.80	2.10	1.80	1.70	1.65	1.95	1.65	1.55
Pilot Burner Injector	0.25				0.25			
Low Fire Adjustment	1 Full Turn Counter Clockwise from the 'Fully In' Position.							
High Fire Adjustment	Maximum Flow Screw. 'Fully In' c.w.							
Burner Operating Pressure (*)	2.6 kPa	2.5 kPa	2.6 kPa		2.6 kPa	2.5 kPa	2.6 kPa	
Supply Pressure	2.75 - 4.50 kPa							
Gas Regulator Cap Screw								

NOTE:

- **(*) Measure burner operating pressure at gas valve outlet test point with burner operating at 'High' setting.**
- **NAT, LPG & Butane Only - Operating pressure is ex-factory set and is not to be adjusted, unless when converting between gases, if required.**
- **TOWN GAS Only - Adjust burner operating pressure using adjustable gas regulator supplied.**
- **(***) - GP8600G Town Gas model is available ex-factory on request only.**
- **Refer to the information in this section for further details.**

KW COMMERCIAL KITCHEN
Distributed by KW Commercial Kitchen | 1300 001 366
www.kwcommercial.com.au | sales@kwcommercial.com.au

Replacement Parts List

IMPORTANT:

Only genuine authorized replacement parts should be used for servicing and repair of this appliance. Instructions supplied with parts should be followed when replacing components.

For further information and servicing instructions, contact your nearest authorized service branch (contact details are as shown on reverse of front cover of this manual).

When ordering replacement parts, please quote part number and description as listed below. If the part required is not listed below, request part by description and quote model number and serial number which is shown on rating plate.

Controls

228041	Burner 450 / 900 / 1200mm L/Hand	(GP8450 / GP8900G / GP8120G).
227444	Burner 600mm	(GP8600G).
227443	Burner 900 / 1200mm R/Hand	(GP8900G) / GP8120G).
019464K	Pilot Burner Kit.	
229407	Overtemp 365°C Millivolt.	(UK Chrome Plate models).
236265	Thermocouple Interrupted - Leaded	(If Overtemp fitted).
019218	Thermocouple	(If No Overtemp fitted).
227508	Piezo Igniter.	
228010	Piezo Housing.	
229731	Piezo HT Lead 250mm.	
019624	Electrode.	
230416	Eurosit Gas Control Kit.	
235496	Knob Adaptor Eurosit.	
227386	Gas Control Knob - 100°C to 290°C.	

032360	Main Injector	(Nat. Gas)	3.60mm	(GP8600G).
032300	Main Injector	(Nat. Gas)	3.00mm	(GP8450 / 8900G).
032285	Main Injector	(Nat. Gas)	2.85mm	(GP8120G).
032210	Main Injector	(LPG [Propane])	2.10mm	(GP8600G).
032180	Main Injector	(LPG [Propane])	1.80mm	(GP8450 / 8900G).
032170	Main Injector	(LPG [Propane])	1.70mm	(GP8120G).
032195	Main Injector	(LPG [Butane])	1.95mm	(GP8600G).
032165	Main Injector	(LPG [Butane])	1.65mm	(GP8450 / 8900G).
032155	Main Injector	(LPG [Butane])	1.55mm	(GP8120G).
038720	Main Injector	(Town Gas)	7.20mm	(GP8600G).
032550	Main Injector	(Town Gas)	5.50mm	(GP8450/8900G).
032520	Main Injector	(Town Gas)	5.20mm	(GP8120G).
019593	Pilot Injector	(Nat. Gas)	0.41.	
019594	Pilot Injector	(LPG / Butane)	0.25.	
026393	Pilot Injector	(Town Gas)	0.75.	

General

228400	Grease Drawer	(GP8600G / GP8900G / GP8120G).	
236813	Grease Drawer	(GP8450G).	
227850	Leg 150mm	(Adjustable) (Flush Stud)	- CB and RB Models.
227851	Leg 150mm	(Adjustable) (Extended Stud)	- LS Models.
227855	Leg 80mm	- B Models.	
229674	Rear Roller Assy	- CB and LS Models.	
232351	Rear Roller Assy	(135mm)	- RB Models.

KW COMMERCIAL KITCHEN
Distributed by KW Commercial Kitchen | 1300 001 366
www.kwcommercial.com.au | sales@kwcommercial.com.au

Gas Conversion Kits

Models	Gas Type to Convert to					
	Nat. Gas	LPG (Propane)	LPG (Butane)	Town Gas	Nat. Gas (UK)	Propane (UK)
GP8450G	236779	236778	236780	236781	236779	236778
GP8600G	232029	232028	232030	232031	232025	232024
GP8900G	232033	232032	232034	232035	232033	232032
GP8120G	232037	232036	232038	232039	232037	232036

Griddle Plate Options

Griddle Plate	Standard	Chromed-(C)	Ribbed & Chromed Options
450mm	236715	236750	450 Chromed (No Ribbing). Standard (Ribbing)
600mm	228584	228157	ON REQUEST (depending on ribbed section width on LH or RH side.
900mm	228585	227641	
1200mm	228586	227650	

Gas Regulators

Gas Type	Gas Regulators	
	Part No.	Description
Nat. Gas **LPG** **Butane**	228531	¾" BSP F/F Convertible.
Town Gas	230185	¾" BSP F/F Adjustable.

Accessories

228566	Griddle Scraper Tool.	
228567	Smooth Plate Scraper Blades	(Pack of 2 blades).
233817	Ribbed Plate Scraper Blade	(Individual Blade).
234792	450mm Plinth Kit	(LS and CB Models only).
228795	600mm Plinth Kit	(LS and CB Models only).
228799	900mm Plinth Kit	(LS and CB Models only).
228803	1200mm Plinth Kit	(LS and CB Models only).
228801	Refrigeration Base - 900mm Plinth Kit	(RB Models only).
228805	Refrigeration Base - 1200mm Plinth Kit	(RB Models only).

KW COMMERCIAL KITCHEN
Distributed by KW Commercial Kitchen | 1300 001 366
www.kwcommercial.com.au | sales@kwcommercial.com.au