PRODUCT DOCUMENT PACK

Prepared and distributed by KW Commercial Kitchen

PRODUCT

Waldorf IN8400F-LS 900mm Electric Induction Cooktop - Leg Stand

Model / SKU: IN8400F-LS

KW COMMERCIAL KITCHEN

7/72 Canterbury Road, Bankstown NSW 2200

Phone 1300 001 366

Email sales@kwcommercial.com.au

Web www.kwcommercial.com.au

Scan for the current KW product page

DOCUMENT NOTICE

The supplier document begins on the next page. KW contact branding is added in a separate footer area and does not replace the supplier's instructions, specifications or warranty terms.

Official supplier source: https://moffat.global.ssl.fastly.net/sites/default/files/products/specification/IN8400F_AN.pdf

Technical data sheet for

INDUCTION COOKTOP 900mm

- FULL AREA INDUCTION ZONE

IN8400F-B, IN8400F-LS, IN8400F-CB

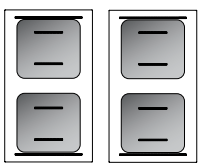

IN8400F-LS

- Heavy-duty construction
- Four 270mm square full area induction zones
- 5kW heating per zone
- Automatic pan detection switches induction zone off when pan removed
- 3 models of base unit
- Stainless steel exterior
- Easy clean
- Easy service
- Fully modular
- Low back models (INL) available

Series Options

IN - Standard splashback models

INL - Low back models

INB - Bold vitreous enamel colour front finish on standard splashback models

INLB - Bold vitreous enamel colour front finish on low back models

Overall Construction

Cooktop

- Welded hob with 2.0mm stainless steel hob top
- Splashback and side panels 1.2mm stainless steel
- Front panels 0.9mm stainless steel
- 6mm thick ceramic glass cooking surface

Bench mount (supplied as – B model)

- Four 63mm dia. heavy-duty 1.2mm 304 stainless steel bench legs with adjustable feet
- Adjustable height 80mm – 105mm

Leg stand (supplied as – LS model)

- Fully modular for matched suite finish
- Framed top for connection to Cooktop
- 63mm dia. heavy-duty 1.2mm 304 stainless steel legs with four adjustable feet
- Fully modular framed stand shelf with 0.9mm 304 stainless steel finish
- Quick assembly design

Cabinet base (supplied as – CB model)

- Fully modular for match suite finish
- Double skin 0.9mm 304 stainless steel interior and exterior
- 63mm dia. heavy-duty 1.2mm 304 stainless steel legs with four adjustable feet

Controls

- Large easy use control knob
- Infinitely variable power controls for each induction zone
- Heating ON indicator lights (green) including pan detection indication
- Error mode indicator light (green)

Cleaning and Servicing

- All models with easy clean stainless steel external finish
- Fully sealed cooking surface
- Removable full stainless steel air intake filters (induction cooling)
- Front service access

Technical data sheet for

INDUCTION COOKTOP 900mm

- FULL AREA INDUCTION ZONE

IN8400F-B, IN8400F-LS, IN8400F-CB

Specifications

Cooktop

4 x 5.0kW full area induction zones
270mm square induction zones

Electrical requirements
IN8400F
20kW, 400-415V, 50/60Hz, 3P+E
28A / phase

Dimensions

Bench model
Width 900mm
Depth 805mm
Height 355mm
Incl. splashback 570mm
Incl. low back 410mm

All models (excluding Bench model)
Width 900mm
Depth 805mm
Height 915mm
Incl. splashback 1130mm
Incl. low back 970mm

Nett Weight

105kg

Packing data

1.03m3, 157kg
Width 945mm
Depth 865mm
Height 1255mm

Options at extra cost

Castors
Plinth mounting

IN8400-B

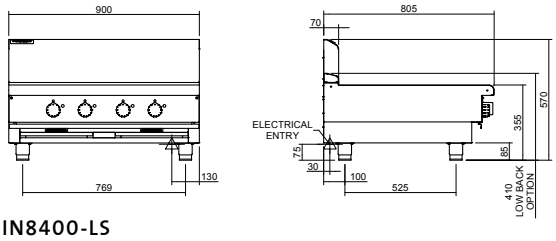

IN8400-LS

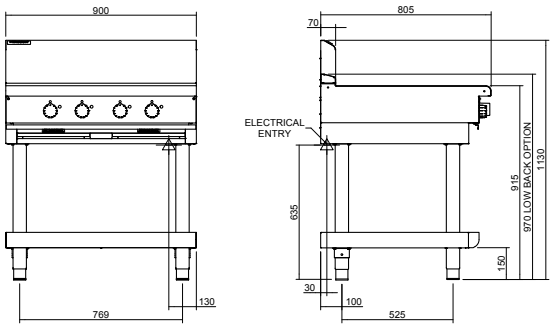

IN8400-CB

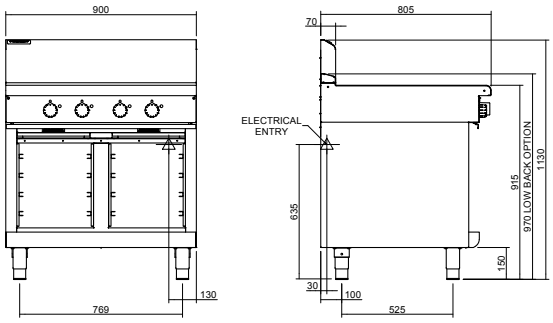

IN8400F

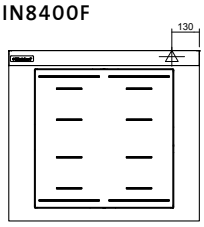

moffat.com.au
moffat.co.nz

Australia
moffat.com.au

Moffat Pty Limited

Victoria/Tasmania
740 Springvale Road
Mulgrave, Victoria 3170
Telephone +613-9518 3888
Facsimile +613-9518 3833
vsales@moffat.com.au

New South Wales
Telephone +612-8833 4111
nswsales@moffat.com.au

South Australia
Telephone +613-9518 3888
vsales@moffat.com.au

Queensland
Telephone +617-3630 8600
qldsales@moffat.com.au

Western Australia
Telephone +618-9413 2400
wasales@moffat.com.au

New Zealand
moffat.co.nz

Moffat Limited

Rolleston
45 Illinois Drive
Izone Business Hub
Rolleston 7675
Telephone +64 3-983 6600
Facsimile +64 3-983 6660
sales@moffat.co.nz

Auckland
Telephone +64 9-574 3150
sales@moffat.co.nz

24:7 Service Support

ISO9001 Quality Management Standard

In line with policy to continually develop and improve its products, Moffat Limited reserves the right to change specifications and design without notice.

© Copyright Moffat Ltd

AN.W8.01/22

an Ali Group Company

The Spirit of Excellence