# PRODUCT DOCUMENT PACK

Prepared and distributed by KW Commercial Kitchen

## PRODUCT

## Waldorf IN8400R5-LS 900mm Electric Induction Cooktop Low Back Version - Leg Stand

## Model / SKU: IN8400R5-LS


### KW COMMERCIAL KITCHEN

7/72 Canterbury Road, Bankstown NSW 2200

Phone 1300 001 366

Email sales@kwcommercial.com.au

Web www.kwcommercial.com.au


Scan for the current KW product page

### DOCUMENT NOTICE

The supplier document begins on the next page. KW contact branding is added in a separate footer area and does not replace the supplier's instructions, specifications or warranty terms.

Official supplier source: https://moffat.global.ssl.fastly.net/sites/default/files/products/specification/IN8400R_AN.pdf

Technical data sheet for

# INDUCTION COOKTOP 900mm

**- ROUND INDUCTION ZONE**

IN8400R3-B, IN8400R3-LS, IN8400R3-CB, IN8400R5-B, IN8400R5-LS, IN8400R5-CB,

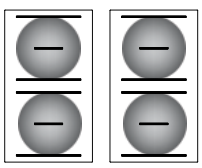

IN8400R5-LS

- Heavy-duty construction
- Four 270mm .dia round induction zones
- 3.5kW or 5kW heating per zone
- Automatic pan detection switches induction zone off when pan removed
- 3 models of base unit
- Stainless steel exterior
- Easy clean
- Easy service
- Fully modular
- Low back models (INL) available

## Induction Zone Options

**R3** - 3.5kW round induction

**R5** - 5kW round induction

## Series Options

**IN** - Standard splashback models

**INL** - Low back models

**INB** - Bold vitreous enamel colour front finish on standard splashback models

**INLB** - Bold vitreous enamel colour front finish on low back models

## Overall Construction

**Cooktop**

- Welded hob with 2.0mm stainless steel hob top
- Splashback and side panels 1.2mm stainless steel
- Front panels 0.9mm stainless steel
- 6mm thick ceramic glass cooking surface

**Bench mount** (supplied as – B model)

- Four 63mm dia. heavy-duty 1.2mm 304 stainless steel bench legs with adjustable feet
- Adjustable height 80mm – 105mm

**Leg stand** (supplied as – LS model)

- Fully modular for matched suite finish
- Framed top for connection to Cooktop
- 63mm dia. heavy-duty 1.2mm 304 stainless steel legs with four adjustable feet
- Fully modular framed stand shelf with 0.9mm 304 stainless steel finish
- Quick assembly design

**Cabinet base** (supplied as – CB model)

- Fully modular for match suite finish
- Double skin 0.9mm 304 stainless steel interior and exterior
- 63mm dia. heavy-duty 1.2mm 304 stainless steel legs with four adjustable feet

## Controls

- Large easy use control knob
- Infinitely variable power controls for each induction zone
- Heating ON indicator lights (green) including pan detection indication
- Error mode indicator light (green)

## Cleaning and Servicing

- All models with easy clean stainless steel external finish
- Fully sealed cooking surface
- Removable full stainless steel air intake filters (induction cooling)
- Front service access

Technical data sheet for

# INDUCTION COOKTOP 900mm

**- ROUND INDUCTION ZONE**

IN8400R3-B, IN8400R3-LS, IN8400R3-CB, IN8400R5-B, IN8400R5-LS, IN8400R5-CB,

## Specifications

### Cooktop

4 x 3.5kW induction zones
or
4 x 5.0kW induction zones
Ø 270mm induction zones

**Electrical requirements**

**IN8400R3**
14kW, 400-415V, 50/60Hz, 3P+E
20A / phase

**IN8400R5**
20kW, 400-415V, 50/60Hz, 3P+E
28A / phase

### Dimensions

**Bench model**
Width 900mm
Depth 805mm
Height 355mm
Incl. splashback 570mm
Incl. low back 410mm

**All models (excluding Bench model)**
Width 900mm
Depth 805mm
Height 915mm
Incl. splashback 1130mm
Incl. low back 970mm

### Nett Weight

105kg

### Packing data

1.03m3, 157kg
Width 945mm
Depth 865mm
Height 1255mm

### Options at extra cost

Castors
Plinth mounting

**IN8400-B**

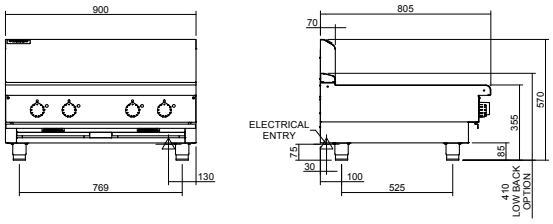


**IN8400-LS**

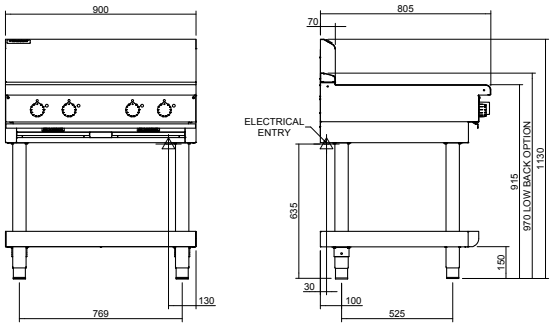


**IN8400-CB**

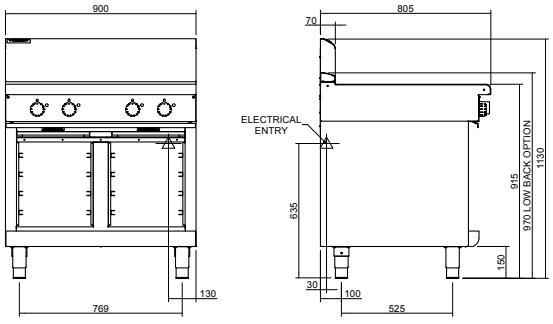


**IN8400R3**
**IN8400R5**

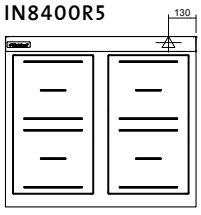



**moffat.com.au**
**moffat.co.nz**

**Australia**
**moffat.com.au**

**Moffat Pty Limited**

Victoria/Tasmania
740 Springvale Road
Mulgrave, Victoria 3170
Telephone +613-9518 3888
Facsimile +613-9518 3833
vsales@moffat.com.au

New South Wales
Telephone +612-8833 4111
nswsales@moffat.com.au

South Australia
Telephone +613-9518 3888
vsales@moffat.com.au

Queensland
Telephone +617-3630 8600
qldsales@moffat.com.au

Western Australia
Telephone +618-9413 2400
wasales@moffat.com.au

**New Zealand**
**moffat.co.nz**

**Moffat Limited**

Rolleston
45 Illinois Drive
Izone Business Hub
Rolleston 7675
Telephone +64 3-983 6600
Facsimile +64 3-983 6660
sales@moffat.co.nz

Auckland
Telephone +64 9-574 3150
sales@moffat.co.nz


24:7 Service Support

ISO9001 Quality Management Standard

In line with policy to continually develop and improve its products, Moffat Limited reserves the right to change specifications and design without notice.


© Copyright Moffat Ltd

AN.W8.01/22

an Ali Group Company

The Spirit of Excellence