PRODUCT DOCUMENT PACK

Prepared and distributed by KW Commercial Kitchen

PRODUCT

Waldorf RN8100G-LS 900mm Gas Target Top - Leg Stand

Model / SKU: RN8100G-LS

KW COMMERCIAL KITCHEN

7/72 Canterbury Road, Bankstown NSW 2200

Phone 1300 001 366

Email sales@kwcommercial.com.au

Web www.kwcommercial.com.au

Scan for the current KW product page

DOCUMENT NOTICE

The supplier document begins on the next page. KW contact branding is added in a separate footer area and does not replace the supplier's instructions, specifications or warranty terms.

Official supplier source: https://moffat.global.ssl.fastly.net/sites/default/files/products/manual/RN8100G_OM_ROW.pdf

Waldorf®
800 SERIES

Installation and Operation Manual

Gas Target Top

RN8100G RNB8100G
RNL8100G RNLB8100G

Date Purchased

Serial Number

Dealer

Service Provider

For use in GB & IE

228092-22

KW COMMERCIAL KITCHEN
Distributed by KW Commercial Kitchen | 1300 001 366
www.kwcommercial.com.au | sales@kwcommercial.com.au

MANUFACTURED BY

Moffat Limited
Rolleston 7675
New Zealand

INTERNATIONAL CONTACTS

AUSTRALIA

Moffat Pty Limited

Web:	www.moffat.com.au
E.Mail:	vsales@moffat.com.au
Main Office:	(tel) +61 (03) 9518 3888
	(fax) +61 (03) 9518 3833
Service:	(tel): 1800 622 216
Spares:	(tel): 1800 337 963
Customer Service:	(tel): 1800 335 315
	(fax): 1800 350 281

CANADA

Serve Canada

Web:	www.servecanada.com
E.Mail:	info@servecanada.com
Sales:	(tel): 800 551 8795 (Toll Free)
Service:	(tel): 800 263 1455 (Toll Free)

NEW ZEALAND

Moffat Limited

Web:	www.moffat.co.nz
E.Mail:	sales@moffat.co.nz
Main Office:	(tel): 0800 663328

UNITED KINGDOM

Blue Seal

Web:	www.blue-seal.co.uk
E.Mail:	sales@blue-seal.co.uk
Sales:	(tel): +44 121 327 5575
	(fax): +44 121 327 9711
Spares:	(tel): +44 121 322 6640
	(fax): +44 121 327 9201
Service:	(tel): +44 121 322 6644
	(fax): +44 121 327 6257

UNITED STATES

Moffat

Web:	www.moffat.com
Sales:	(tel): 1-800 551 8795 (Toll Free)
	(tel): 336 661 1556
	(fax): 336 661 9546
Service:	(tel): 866 673 7937 (Toll Free)

REST OF WORLD

Moffat Limited

Web:	www.moffat.co.nz
E.Mail:	export@moffat.co.nz

The reproduction or copying of any part of this manual by any means whatsoever is strictly forbidden unless authorized previously in writing by the manufacturer.

In line with policy to continually develop and improve its products, Moffat Ltd. reserves the right to change the specifications and design without prior notice.

© Copyright Moffat Ltd. November 2019.

Waldorf Gas Target Top

RN(L)(B)**8100G Target Top - 900mm.**

Introduction 2

Specifications 3
- Model Numbers Covered in this Specification
- General
- Gas Supply Requirements
- Gas Connection

Dimensions 5
- Weight

Installation 9
- Installation Requirements
- Unpacking
- Location
- Clearances
- Assembly
- Fitting Adjustable Feet / Rear Rollers to Leg Stand Units
- Fitting Adjustable Feet / Rear Rollers to Cabinet and Refrigeration Bases
- Gas Connection
- Commissioning

Operation 15
- Operation Guide
- Description of Controls
- Lighting Pilot Burner
- Lighting Main Burner

Cleaning and Maintenance 17
- General
- After Each Use
- Daily Cleaning
- Weekly Cleaning
- Periodic Maintenance

Fault Finding 19

Gas Conversion and Specifications 20
- Conversion Procedure
- Gas Specifications

Replacement Parts List 23

Introduction

We are confident that you will be delighted with your WALDORF TARGET TOP, and it will become a most valued appliance in your commercial kitchen.

To ensure you receive the utmost benefit from your new Waldorf Target Top, there are two important things you can do.

Firstly:

Please read the instruction book carefully and follow the directions given. The time taken will be well spent.

Secondly:

If you are unsure of any aspect of the installation, instructions or performance of your appliance, contact your WALDORF dealer promptly. In many cases a phone call could answer your question.

Warning

IMPROPER INSTALLATION, ADJUSTMENT, ALTERATION, SERVICE OR MAINTENANCE CAN CAUSE PROPERTY DAMAGE, INJURY OR DEATH. READ THE INSTALLATION, OPERATING AND MAINTENANCE INSTRUCTIONS THOROUGHLY BEFORE INSTALLING OR SERVICING THIS APPLIANCE.

Warning

INSTRUCTIONS TO BE FOLLOWED IN THE EVENT THE USER SMELLS GAS ARE TO BE POSTED IN A PROMINENT LOCATION. THIS INFORMATION SHALL BE OBTAINED BY CONSULTING THE LOCAL GAS SUPPLIER.

Warning

GREAT CARE MUST BE TAKEN BY THE OPERATOR TO USE THE EQUIPMENT SAFELY TO GUARD IT AGAINST RISK OF FIRE.

- **THE APPLIANCE MUST NOT BE LEFT ON UNATTENDED.**
- **IT IS RECOMMENDED THAT A REGULAR INSPECTION IS MADE BY A COMPETENT SERVICE PERSON TO ENSURE CORRECT AND SAFE OPERATION OF YOUR APPLIANCE IS MAINTAINED.**
- **DO NOT STORE OR USE GASOLINE OR OTHER FLAMMABLE VAPOURS OR LIQUIDS IN THE VICINITY OF THIS OR ANY OTHER APPLIANCE.**
- **DO NOT SPRAY AEROSOLS IN THE VICINITY OF THIS APPLIANCE WHILE IT IS IN OPERATION.**

Caution

- **This appliance is for professional use and is only to be used by qualified persons.**
- **Only authorised service persons are to carry out installation, servicing or gas conversion operations.**
- **Components having adjustments protected (e.g. paint sealed) by the manufacturer should not be adjusted by the user / operator.**
- **DO NOT operate the appliance without the legs supplied fitted.**

KW COMMERCIAL KITCHEN
Distributed by KW Commercial Kitchen | 1300 001 366
www.kwcommercial.com.au | sales@kwcommercial.com.au

Model Numbers Covered in this Specification

RN[1]**8100G -** [2]**Gas Target Top, 900mm wide.**

NOTE:

[1]: - Model Options;

- \- Standard.
- L - Low Back.
- B - Bold Front.
- LB - Low Back and Bold Front.

[2] - Base Stand Options;

- B - Bench Mount.
- CB - Cabinet Base.
- LS - Leg Stand.
- RB - Refrigerated Base.

General

A commercial heavy duty, gas fired Target Top having a high output, two stage double-ring cast iron burner offering accurate temperature control and infinitely variable heat with heat radiating out from centre of Target Top. Main Burner is located underneath removable cast target top plates.
Target Top is constructed as a hob unit and is available on Leg Stand (-LS), Bench Mount (-B), Cabinet Base (-CB) or to fit on a Refrigeration Base Unit (-RB).

Gas Supply Requirements

- Australia:

	Natural Gas	LP Gas (Propane)
Input Rating (N.H.G.C.)	45 MJ/hr	45 MJ/hr
Supply Pressure	1.13 - 3.40 kPa	2.75 - 4.50 kPa
Burner Operating Pressure (*)	1.0 kPa	2.6 kPa
Gas Connection	¾" BSP Male	

- New Zealand:

	Natural Gas	LP Gas
Input Rating (N.H.G.C.)	45 MJ/hr	45 MJ/hr
Supply Pressure	1.13 - 3.40 kPa	2.75 - 4.50 kPa
Burner Operating Pressure (*)	1.0 kPa	2.6 kPa
Gas Connection	¾" BSP Male	

- UK Only:

Category: **$II_{2H3P.}$**
Flue Type: **$A_{1.}$**

		Natural Gas (G20)	Propane (G31)
Heat Input (nett)	**Nominal**	11.5 kW	11.5 kW
	Reduced	4.7 kW	7.9 kW
	Pilot	200 W	200 W
Gas Rate (nett)	**Nominal**	1.22 m^3/hr	0.89 kg/hr
	Reduced	0.50 m^3/hr	0.61 kg/hr
	Pilot	0.02 m^3/hr	0.02 kg/hr
Supply Pressure		20 mbar	37 mbar
Burner Operating Pressure (*)		9.9 mbar	26.8 mbar
Gas Connection		$^3/_4$" B.S.P. Male	

(*) Measure Burner operating pressure at target top hob manifold test point with target top burner (Inner and Outer rings) operating at full setting. Operating pressure is ex-factory set, through appliance regulator and is not to be adjusted, apart from when carrying out gas conversion, if required. (Refer to details in 'Gas Conversion' section for information).

KW COMMERCIAL KITCHEN
Distributed by KW Commercial Kitchen | 1300 001 366
www.kwcommercial.com.au | sales@kwcommercial.com.au

- All Other Markets:

	Natural Gas	Town Gas (**)
Input Rating (N.H.G.C.)	45 MJ/hr	45 MJ/hr
Supply Pressure	1.13 - 3.40 kPa	0.75 - 1.50 kPa
Burner Operating Pressure (*)	1.0 kPa	0.63 kPa
Gas Connection	¾" BSP Male	

	LP Gas (Propane)	Butane
Input Rating (N.H.G.C.)	45 MJ/hr	45 MJ/hr
Supply Pressure	2.75 - 4.50 kPa	2.75 - 4.50 kPa
Burner Operating Pressure (*)	2.6 kPa	2.6 kPa
Gas Connection	¾" BSP Male	

- **(*) Measure burner operating pressure at target top hob manifold test point with target top burner (Inner and outer ring) operating at full setting.**
- **NAT, LPG & Butane Only - Operating pressure is ex-factory set and is not to be adjusted, apart from when converting between gasses, if required.**
- **(**) TOWN GAS Only - Burner operating pressure is to be adjusted using adjustable gas regulator supplied. Town Gas Option is only available with specific ex-factory built Town Gas models, which can also be converted to any other gas. Standard models can only be converted between Nat. Gas, LP Gas and Butane, but not Town Gas.**
- **Refer to 'Gas Conversion and Specifications' section of this manual for further details.**

Gas Connection

Bench Models Only.

Gas supply connection point is located 130mm from right hand side of appliance, 32mm from rear, 55mm from floor and is entered from beneath appliance. An optional underside connection is available.

Cabinet and Refrigeration Base Only.

Gas supply connection point is located 130mm from right hand side of appliance, 32mm from rear, 655mm from floor and is entered from beneath appliance. An optional underside connection is available.

Connection is ¾" BSP male.

For Refrigeration Cabinet Specifications refer to Refrigeration Cabinet Installation and Operation Manual supplied with appliance.

KW COMMERCIAL KITCHEN
Distributed by KW Commercial Kitchen | 1300 001 366
www.kwcommercial.com.au | sales@kwcommercial.com.au

RN(L)8100G-B

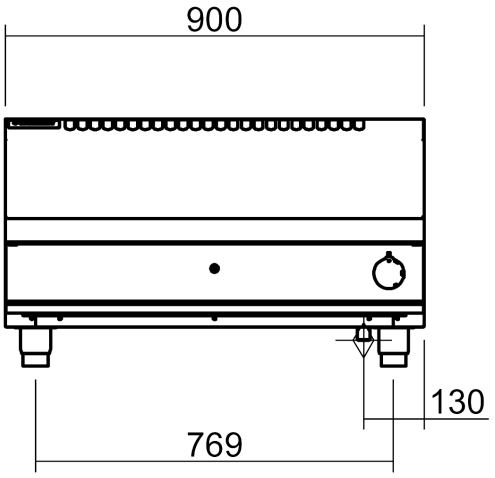

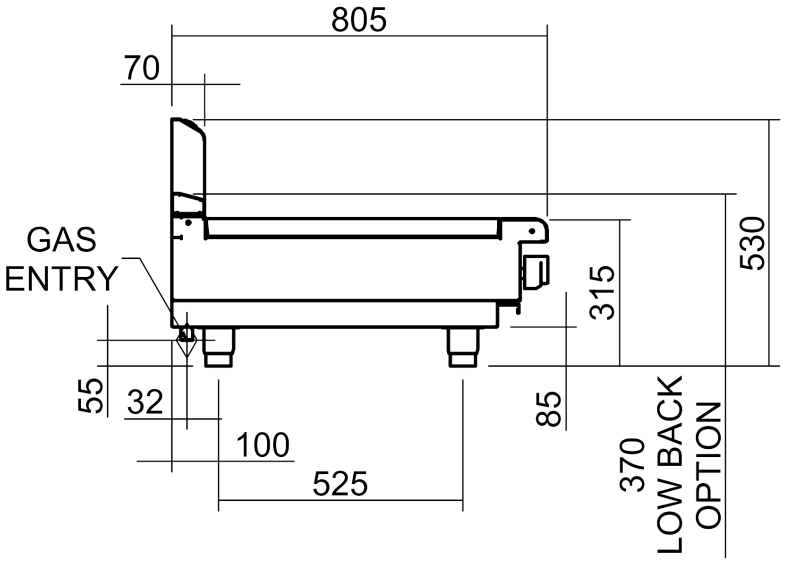

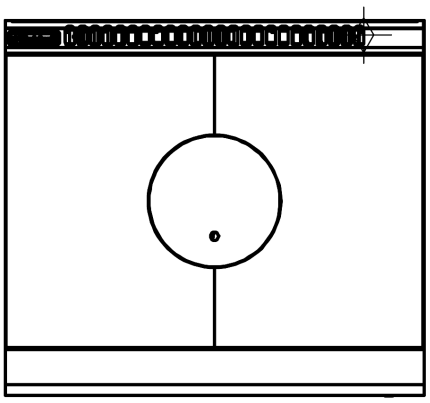

Weight (Nett)

RN8100G - B 160 kg.

Distributed by KW Commercial Kitchen | 1300 001 366
www.kwcommercial.com.au | sales@kwcommercial.com.au

Dimensions

RN(L)**8100G-LS**

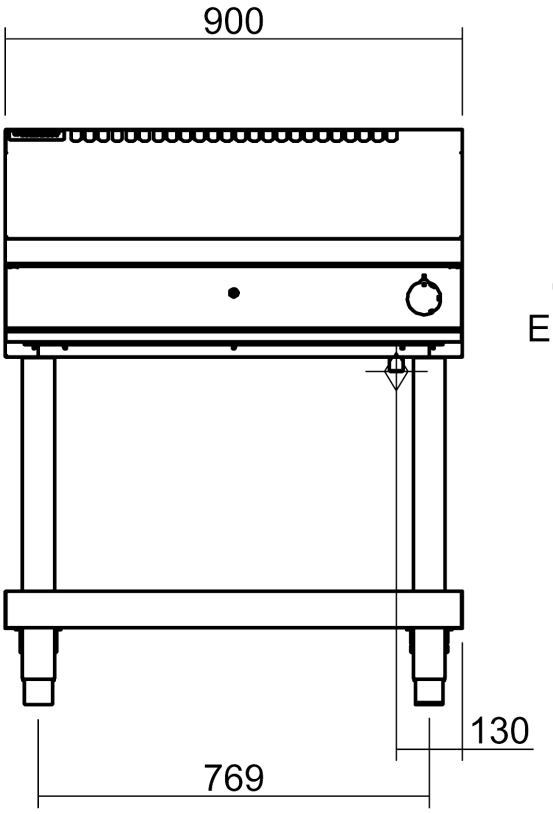

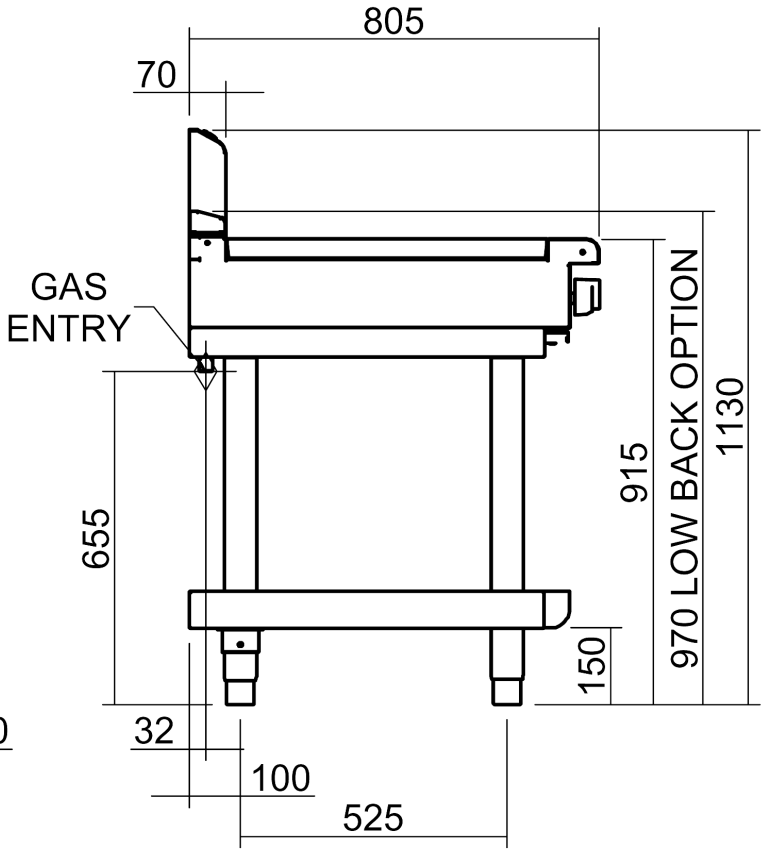

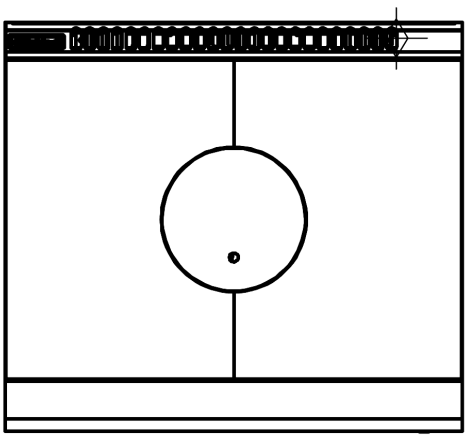

Weight (Nett)

RN8100G - LS 180 kg.

Distributed by KW Commercial Kitchen | 1300 001 366
www.kwcommercial.com.au | sales@kwcommercial.com.au

RN(L)8100G-CB

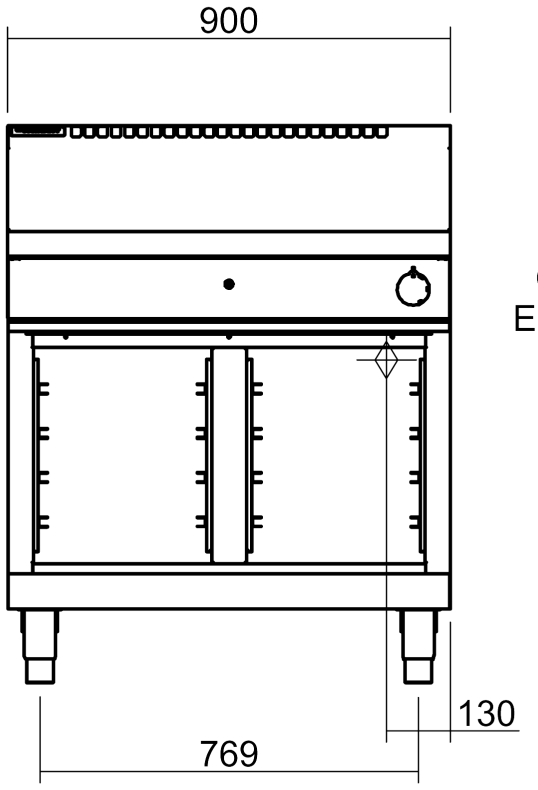

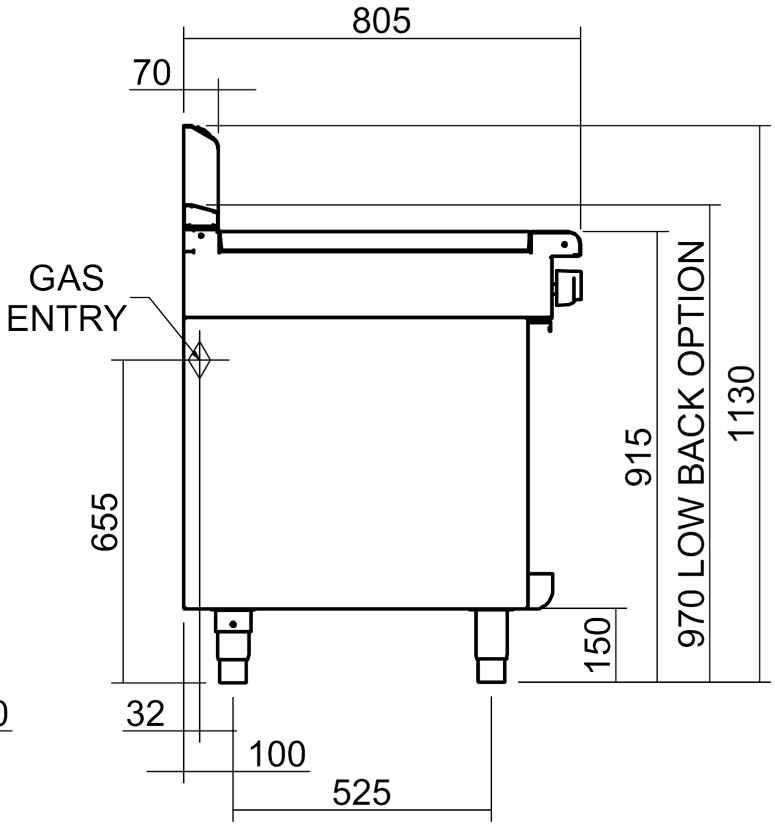

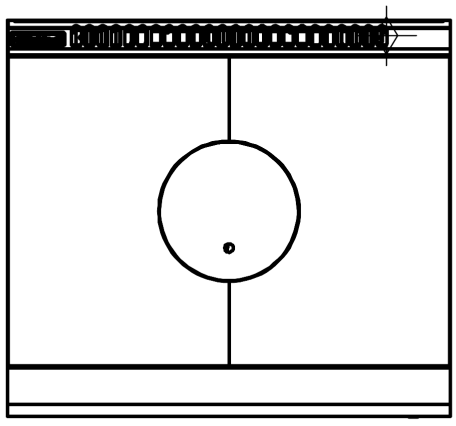

Weight (Nett)

RN8100G - CB 200 kg.

Distributed by KW Commercial Kitchen | 1300 001 366
www.kwcommercial.com.au | sales@kwcommercial.com.au

Dimensions

RN(L)**8100G-RB**

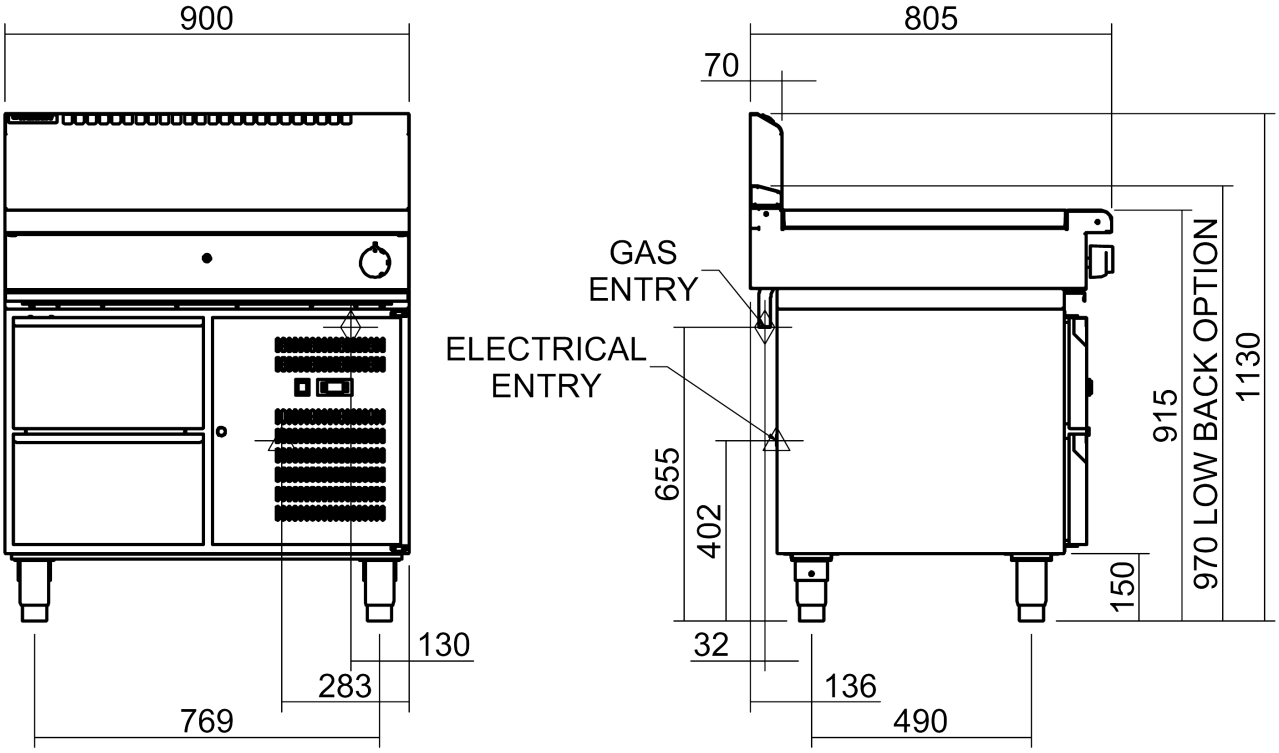

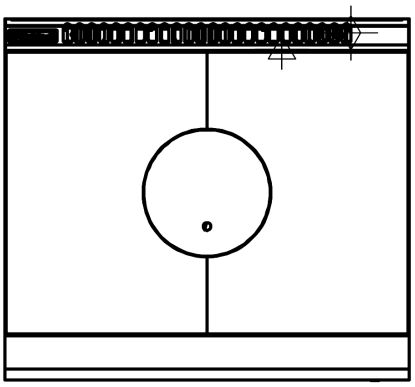

Weight (Nett)

RN8100G - RB 240 kg (Including Refrigeration Cabinet).

Distributed by KW Commercial Kitchen | 1300 001 366
www.kwcommercial.com.au | sales@kwcommercial.com.au

Installation Requirements

NOTE:

- **It is most important that this target top is installed correctly and that operation is correct before use. Installation shall comply with local gas, health and safety requirements.**
- **This appliance shall be installed with sufficient ventilation to prevent occurrence of unacceptable concentrations of health harmful substances in room, the appliance is installed in.**

Waldorf Target Tops are designed to provide years of satisfactory service, and correct installation is essential to achieve the best performance, efficiency and trouble-free operation.
This appliance must be installed in accordance with National installation codes and in addition, in accordance with relevant National / Local codes covering gas and fire safety.

Australia / New Zealand:	- AS/NZS5601 - Gas Installations.
United Kingdom:	- Gas Safety (Installation & Use) Regulations 1998.
	- BS6173 - Installation of Catering Appliances.
	- BS5440 1 & 2 - Installation Flueing & Ventilation.
Ireland:	- IS 820 - Non - Domestic Gas Installations.

Installations must be carried out by authorised persons only. Failure to install equipment to relevant codes and manufacturer's specifications shown in this section will void the warranty.

Components having adjustments / settings protected (e.g. paint sealed) by the manufacturer are only to be adjusted by an authorised service agent. They are not to be adjusted by the installation person.

Unpacking

- Remove all packaging and transit protection from appliance including all protective plastic coating from exterior stainless steel panels.
- Check equipment and parts for damage. Report any damage immediately to carrier and distributor.
- Ensure the 4 adjustable feet are fitted with protruding centre screw. (Not fitted on RN8100G - RB Models).
- Report any deficiencies to distributor who supplied appliance.
- Check available gas supply is correct to as shown on rating plate. Refer to 'Dimensions' section for rating plate locations for different models.

Location

1. Installation must allow for a sufficient flow of fresh air for combustion air supply.
2. Installation must include adequate ventilation means, to prevent dangerous build up of combustion products.

Combustion Air Requirements:	
Natural Gas	**12 m^3/hr**
LPG	**12 m^3/hr**
Town Gas	**12 m^3/hr**

3. Never directly connect a ventilation system to appliance flue outlet.
4. Any gas burning appliance requires adequate clearance and ventilation for optimum and trouble-free operation. Minimum installation clearances shown overleaf are to be adhered to.
5. Position target top in its approximate working position.
6. All air for burner combustion is supplied from beneath appliance. Legs must always be fitted and no obstructions placed on or around base of appliance, as obstructions will cause incorrect operation and / or failure of appliance.

NOTE: Do not obstruct or block appliances flue. Never directly connect a ventilation system to appliance flue outlet.

KW COMMERCIAL KITCHEN
Distributed by KW Commercial Kitchen | 1300 001 366
www.kwcommercial.com.au | sales@kwcommercial.com.au

7. If the Target Top is fitted with a Refrigeration Cabinet, the cabinet must NOT be installed in an explosive environment, open air or exposed to rain. The following considerations should be made;-
   - Cabinet must be located away from heat sources (radiators ovens and other heat generating kitchen appliances) and direct sunlight.
   - Must be protected from draughts.
   - Air circulation around the condensing unit must not be obstructed.

Clearances

NOTE: Only non-combustible materials can be used in close proximity to this appliance.

	Combustible Surface	Non Combustible Surface
-B/-CB/-LS models: Left/Right Hand Side	50mm	0mm
Rear	50mm	0mm
-RB model: Sides / Rear	75mm	75mm *

*** For additional clearances information refer to Refrigeration Cabinet Installation and Operation Manual supplied with Refrigeration Cabinet.**

Assembly

NOTE:

- **Leg Stand Model (RN8100G-LS), will require assembly. Refer to 'Leg Stand Models Only' information shown below for assembly instructions.**
- **All Models are delivered completely assembled. No further assembly is required, with the exception of Leg Stand Model (RN8100G-LS), this will require assembly. Refer to Fitting of Adjustable Feet / Rear Rollers to Leg Stand Units' information below for assembly instructions.**
- **Appliance rear leg housings can be fitted with:-**

  Adjustable feet to assist with appliance levelling on uneven floors.

  Rear rollers to enable appliance to be easily moved for positioning and cleaning purposes.

Optional Accessories (Refer to Replacement Parts List)

- Plinth Kit. For installation details, refer to instructions supplied with each kit.

Fitting Adjustable Feet / Rear Rollers to Leg Stand Units.

Caution

To prevent equipment damage and risk of injury, remove all castings, fire bricks and other removable items prior to fitting leg stand.

1. Remove centre casting from target top using casting removal tool and remove 2 half plate castings.
2. Remove all fire bricks from target top.
3. Lower target top onto it's rear face.
4. Attach four hob legs to leg mounting positions on underside of target top. Secure each leg hand tight.
5. Align four round cut out holes on base tray with four hob legs already fitted to target top (Ensure base tray is orientated with sloping edge of base tray facing front of unit.
6. Slot base tray onto four hob legs and push fully home.
7. Secure base tray to hob legs by screwing two front adjustable feet supplied, into base of front hob legs. Secure each adjustable foot hand tight.
8. The two rear leg housings can be fitted with either adjustable feet or rollers. (See Fig 1).

KW COMMERCIAL KITCHEN
Distributed by KW Commercial Kitchen | 1300 001 366
www.kwcommercial.com.au | sales@kwcommercial.com.au

Rear Adjustable Feet, fitting:-

a. Secure rear of base tray to rear target top legs by screwing two adjustable feet supplied, into base of rear target top legs.

b. Secure each adjustable foot, hand tight.

Rear Rollers, fitting:-

a. Fit rear leg securing bolts up through centre of rear leg housings to secure rear of base tray to rear target top legs and tighten up bolts using a 24mm socket.

b. Fit rear rollers to rear leg supports.

c. Secure rear rollers to rear leg supports using locating screw supplied.

d. Tighten screw using a 10mm spanner.

9. Lift target top back onto its legs / rollers and refit all fire bricks to fire box.
10. Refit 2 half plate castings, ensuring that they correctly interlock once fitted.
11. Refit centre casting using casting fitting / removal tool.
12. Adjust adjustable feet to level appliance.

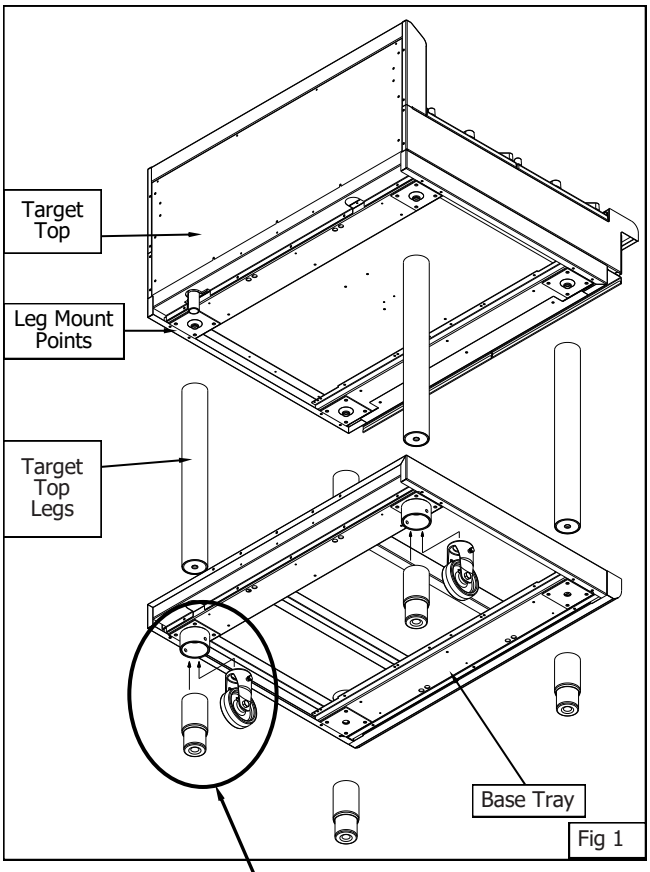

Fig 1

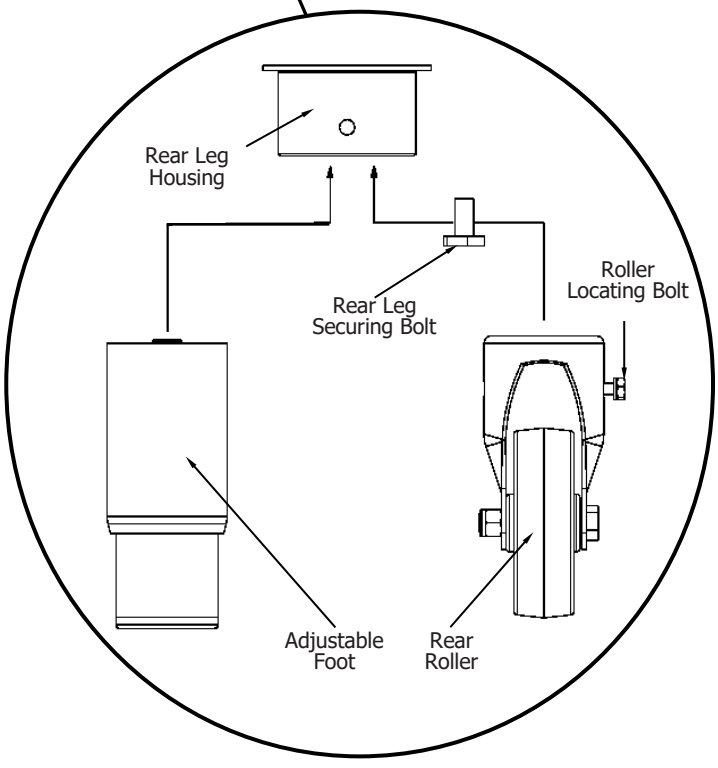

KW COMMERCIAL KITCHEN
Distributed by KW Commercial Kitchen | 1300 001 366
www.kwcommercial.com.au | sales@kwcommercial.com.au

Fitting Adjustable Feet / Rear Rollers to Cabinet and Refrigeration Bases.

Rear Adjustable Feet, fitting:-

1. Raise appliance from floor by approximately 75mm using suitable lifting equipment (i.e. Palletiser / Forklift) to allow rear rollers to be removed.
2. Unscrew and remove securing bolt securing rear roller to rear leg housing.
3. Rear roller will drop freely from rear leg housing.
4. Remove second rear roller.
5. Screw rear adjustable feet into rear leg housings and tighten hand tight.
6. Lower appliance back to floor and adjust adjustable feet to level appliance.

Rear Rollers, fitting:-

1. Raise appliance from floor by approximately 75mm using suitable lifting equipment (i.e. Palletiser / Forklift) to allow rear adjustable feet to be removed.
2. Unscrew and remove both rear adjustable feet from rear leg housings.
3. Fit rear roller to rear leg housing and align screw hole in side of rear leg housing with threaded hole in rear roller.
4. Secure rear roller to leg support with bolt supplied and tighten using a 10mm A/F spanner.
5. Fit second roller and tighten.
6. Lower appliance back to floor and adjust front adjustable feet to level appliance.

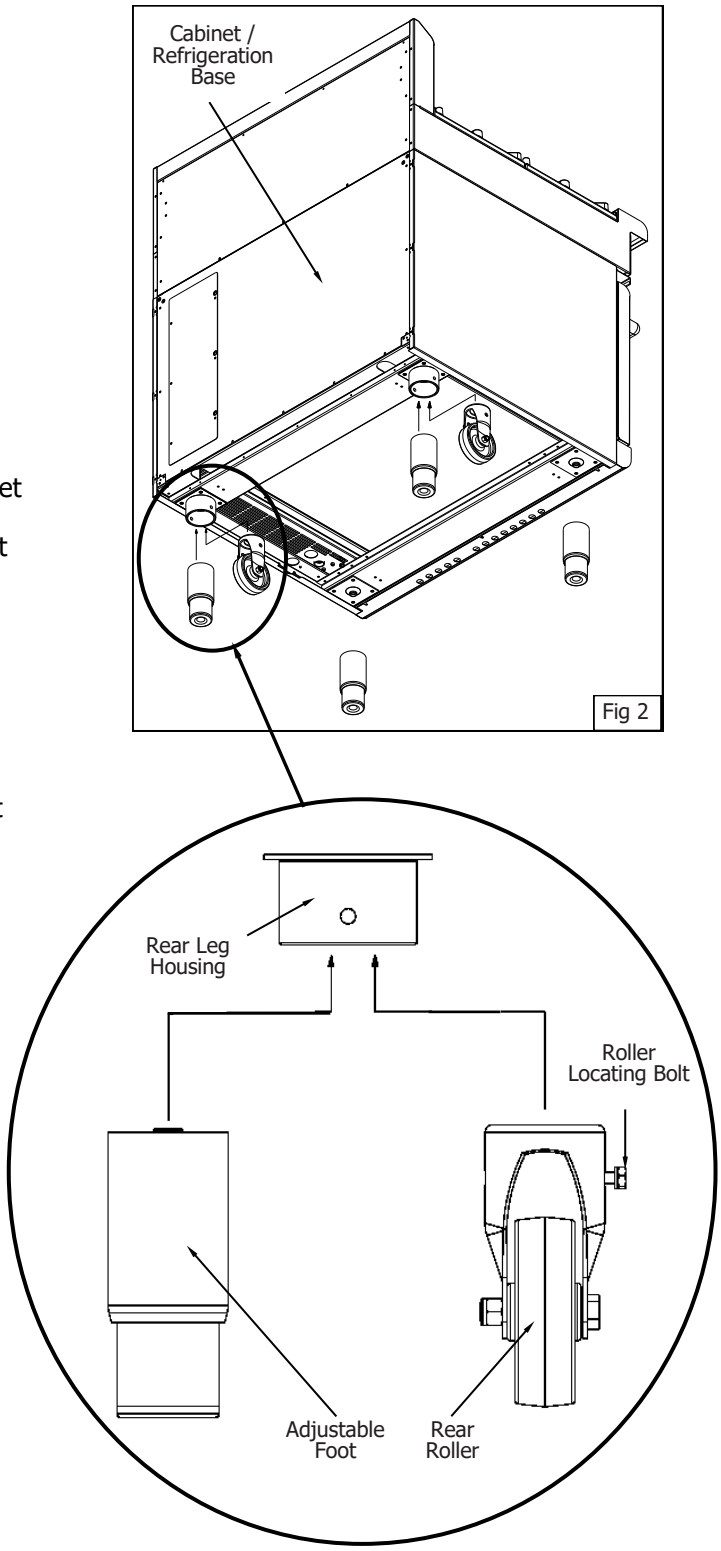

Fig 2

KW COMMERCIAL KITCHEN
Distributed by KW Commercial Kitchen | 1300 001 366
www.kwcommercial.com.au | sales@kwcommercial.com.au

Gas Connection

NOTE: ALL GAS FITTING MUST ONLY BE CARRIED OUT BY AN AUTHORISED PERSON.

1. Waldorf Target Tops do not require an electrical connection, as they function totally on gas supply only.
2. It is essential that gas supply is correct for target top to be installed and that adequate supply pressure and volume are available. The following checks should be made before installation:-

   a. **Gas Type** the appliance has been supplied for is shown on coloured sticker located above gas connection and on the rating plate. Check this is correct for gas supply appliance is being installed for. Gas conversion procedure is detailed in this manual.

   b. **Supply Pressure** required for this appliance is shown in 'Specifications' section of this manual. Check gas supply to ensure adequate supply pressure exists.

   c. **Input Rate** of this appliance is shown on Rating Plate and in 'Specifications' section of this manual. Input rate should be checked against available gas supply line capacity. **Particular note should be taken if target top is being added to an existing installation.**

NOTE: It is important that adequately sized piping runs directly to connection joint on appliance with as few tees and elbows as possible to give maximum supply volume.

3. Fit gas regulator supplied, into gas supply line as close to appliance as possible.

NOTE: Gas pressure regulator provided with this appliance is convertible between Natural Gas and LPG as per 'Gas Conversion Section' in this manual.
Ensure regulator is converted to correct gas type that appliance will operate on.
Regulator outlet pressure is fixed ex-factory for gas type that regulator is converted to and it is <u>NOT to be adjusted</u>.

Regulator connections are $^{3}/_{4}$" BSP female.
Connection to appliance is $^{3}/_{4}$" BSP male.

(Refer to 'Specifications' section for gas supply location dimensions).

NOTE: A Manual Isolation Valve must be fitted to individual appliance supply line.

4. Correctly locate appliance into its final operating position and using a spirit level, adjust legs so that unit is level and at correct height.
5. Connect gas supply to appliance. A suitable jointing compound which resists breakdown action of LPG must be used on every gas line connection, unless compression fittings are used.
6. Check all gas connections for leakages using soapy water or other gas detecting equipment.

Warning

DO NOT USE A NAKED FLAME TO CHECK FOR GAS LEAKAGES.

KW COMMERCIAL KITCHEN
Distributed by KW Commercial Kitchen | 1300 001 366
www.kwcommercial.com.au | sales@kwcommercial.com.au

7. Check gas operating pressure is as shown in the 'Specifications' section.

NOTE: Measure Burner operating pressure at target top hob manifold test point with target top burner (Inner and outer ring) operating at full setting.

8. Verify operating pressure remains correct.

NOTE: This appliance is fitted with adjustable feet to enable appliance to be positioned securely and level. This should be carried out on completion of gas connection.

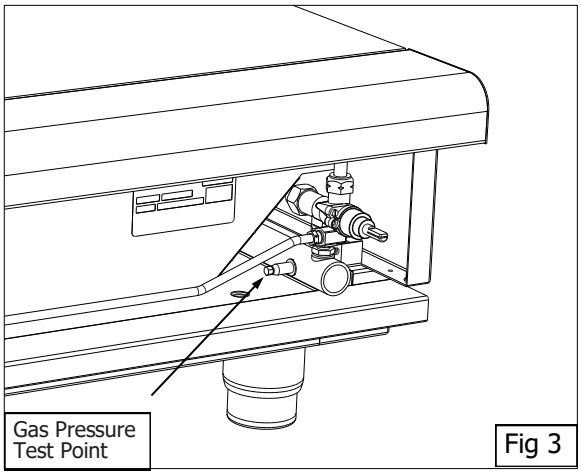

Fig 3

Commissioning

Before leaving new installation;

1. Check the following functions in accordance with operating instructions specified in 'Operation' section of this manual.
   - Light the Pilot Burner.
   - Light the Main Burner.
   - Check the Low Fire burner operation.
   - Check the High Fire burner operation.
2. Ensure the operator has been instructed in areas of correct lighting, operation and shutdown procedure for appliance.

This manual must be kept by the owner for future reference, and a record of ***Date of Purchase, Date of Installation*** and ***Serial Number of Appliance*** recorded and kept with this manual. **(These details can be found on Rating Plate. Refer to 'Dimensions' section for Rating Plate location for all models)**.

NOTE: If for some reason it is not possible to get appliance to operate correctly, shut 'Off' gas supply and contact supplier of this appliance.

For Refrigeration Cabinet Installation details, refer to Refrigeration Cabinet Installation and Operation Manual supplied with appliance.

KW COMMERCIAL KITCHEN
Distributed by KW Commercial Kitchen | 1300 001 366
www.kwcommercial.com.au | sales@kwcommercial.com.au

Operation Guide

Caution

- **This appliance is for professional use and is only to be used by qualified persons.**
- **Only authorised service persons are to carry out installation, servicing or gas conversion operations.**
- **Components having adjustments protected (e.g. paint sealed) by the manufacturer should not be adjusted by the user / operator.**

1. Waldorf target tops have been designed to provide simplicity of operation and 100% safety protection.
2. Improper operation is almost impossible, however bad operation practices can reduce the life of the target top and produce a poor quality product. To use this target top correctly please read the following sections carefully:-
   - Lighting the Pilot Burner.
   - Lighting the Main Burner.
   - Temperature Zones.

Description of Controls

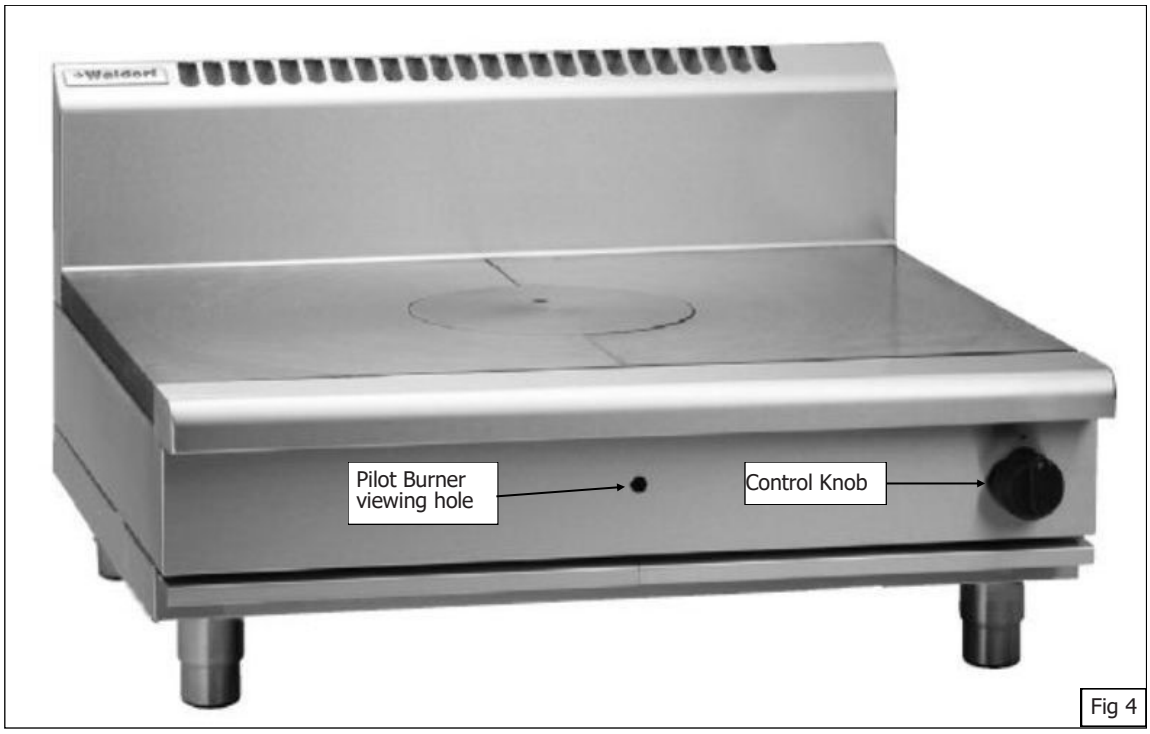

Fig 4

Gas Control Knobs

- OFF Position
- PILOT Burner
- HIGH Flame
- LOW Flame

For Refrigeration Cabinet Operations refer to Refrigeration Cabinet Installation and Operation Manual supplied with appliance.

KW COMMERCIAL KITCHEN
Distributed by KW Commercial Kitchen | 1300 001 366
www.kwcommercial.com.au | sales@kwcommercial.com.au

Lighting Pilot Burner

1. Remove centre casting with casting removal tool.
2. Push-in control knob and rotate anti-clockwise to PILOT position.
3. With control knob depressed, manually light pilot burner located in front of main burner.
4. Hold in control knob for approximately 10 to 15 seconds, then release.
5. Pilot burner should remain alight. If not repeat **Items 2 to 4** above until pilot burner lights.

Lighting Main Burner

1. Ensure pilot burner is alight by checking through hole in centre of front control panel or by removing centre casting with casting removal tool.
2. Rotate control knob anti-clockwise to position marked HIGH.
3. Main burner will ignite automatically off pilot burner.
4. Once lit main burner will be burning at full rate. For a lower heat turn knob fully anti-clockwise to LOW position.
5. Also for intermediate heat, position control knob between HIGH and LOW positions.

NOTE: Always set control knob to HIGH position when lighting main burner. If pilot burner goes out during normal operation wait 5 minutes before re-lighting.

6. The cast iron work surface has a heat pattern that can be used effectively by positioning cooking pans etc. appropriately according to heat requirement.

Heat Pattern for Target Top on Full Heat (°C)

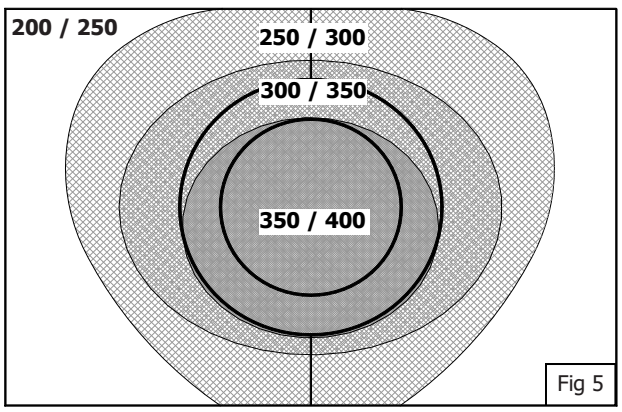

Fig 5

Heat Pattern for Target Top on Low Heat (°C)

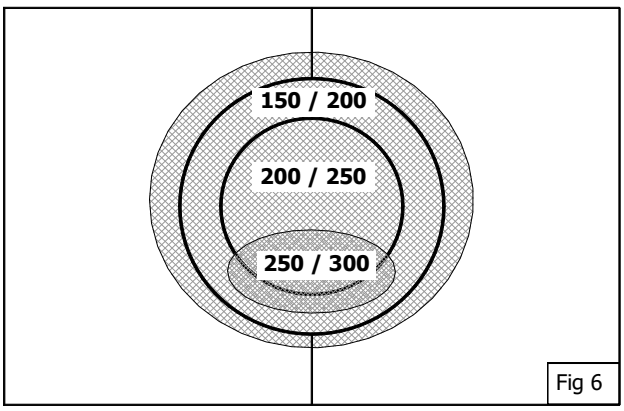

Fig 6

IMPORTANT:

Should any abnormal operation like;

- **ignition problems,**
- **abnormal burner flame,**
- **burner control problems,**
- **partial or full loss of burner flame in normal operation, be noticed, appliance requires IMMEDIATE service by a qualified service person and should not be used until such service is carried out.**

KW COMMERCIAL KITCHEN
Distributed by KW Commercial Kitchen | 1300 001 366
www.kwcommercial.com.au | sales@kwcommercial.com.au

General

Caution

Always turn 'Off' gas supply before cleaning.

This appliance is not water proof.

Do not use water jet spray to clean interior or exterior of this appliance.

Clean the Target Top regularly. A clean appliance looks better, will last longer and will perform better. Carbonised grease on cooking surface will hinder transfer of heat from cooking surface to food. This will result in loss of cooking efficiency.

DO NOT use water on Target Top while this item is still hot as warping and cracking may occur. Allow Target Top to cool down before cleaning.

NOTE:

- **DO NOT use abrasive detergents, sharp scrapers, strong solvents or caustic detergents as they could corrode or damage Target Top / Range.**
- **In order to prevent rust forming on Target Top, ensure that any detergent or cleaning material has been completely removed after each cleaning. Appliance should be switched 'On' briefly to ensure target top becomes dry.**

To keep your Target Top clean and operating at peak efficiency, follow the procedures below:-

After Each Use

Clean the Target Top with a stiff nylon brush or a flexible spatula to remove any build up of carbon.

Daily Cleaning

1. Thoroughly clean splash back, interior and exterior surfaces of Target Top with hot water, a mild detergent solution and a soft scrubbing brush.
2. Brush Target Top (cast iron) with a soft bristled brush followed by wiping with a cloth to prevent accumulation of carbon.
3. Clean Control Panel with a damp cloth lightly moistened with a solution of mild detergent and water. Dry control panel thoroughly with a dry cloth and polish with a soft dry cloth.
4. Remove drip tray and clean with a mild anti bacterial detergent and hot water solution using a soft bristled brush. Dry drip tray thoroughly with a dry cloth.
5. Dry target top thoroughly with a dry cloth and polish with a soft dry cloth.

Weekly Cleaning

NOTE:

- **If Target Top usage is very high, we recommend weekly cleaning procedure is carried out on a more frequent basis.**
- **Ensure that protective gloves are worn during cleaning process.**
- **DO NOT use harsh abrasive detergents, sharp scrapers, strong solvents or caustic detergents as they will damage Target Top.**
- **DO NOT use water on Target Top while it is still hot as warping may occur. Allow castings to cool down before cleaning.**

Target Top

a. This should be kept clean of any build up of food spillage. Provided the cast iron work surface is regularly used it will maintain itself in good condition with no special cleaning requirements.
b. Clean any food residue and spillage from channels around centre casting and main plates before use.

KW COMMERCIAL KITCHEN
Distributed by KW Commercial Kitchen | 1300 001 366
www.kwcommercial.com.au | sales@kwcommercial.com.au

c. **DO NOT use water on castings while they are still hot as cracking may occur.** Should it be necessary to clean castings, allow them to cool and then remove for cleaning. Clean using a soft cloth moistened with a mild detergent and hot water solution and a scrubbing brush. Dry thoroughly with a dry cloth.
d. Remove drip tray and clean with a mild anti bacterial detergent and hot water solution using a soft bristled brush. Dry drip tray thoroughly with a dry cloth.

Stainless Steel Surfaces

a. Clean Target Top exterior surfaces with hot water, a mild detergent solution and a soft scrubbing brush. Note the gas control knobs are a push fit onto gas control valve spindles and can be removed to clean front control panel.
b. Baked on deposits or discolouration may require a good quality stainless steel cleaner or stainless steel wool. Always apply cleaner when appliance is cold and rub in direction of grain.
c. To remove any discolouration, use an approved stainless steel cleaner or stainless steel wool. Always rub in direction of grain.
d. Dry all components thoroughly with a dry cloth and polish with a soft dry cloth.

Periodic Maintenance

NOTE: All maintenance operations should only be carried out by a qualified service person.

To achieve the best results cleaning must be regular and thorough and all controls and mechanical parts should be checked and adjusted periodically by a qualified service person. If any small faults occur, have them attended to promptly. Don't wait until they cause a complete breakdown. It is recommended that the appliance is serviced every 6 months.

Gas Control Valve Re-Greasing

The gas control valve should be dismantled and greased every 6 months to ensure correct operation of gas control valve.

To carry out this operation;-
a. Remove gas control knobs from gas tap spindles by pulling knobs away from control panel.
b. Remove drip tray from appliance.
c. Remove two screws on underside of control panel, securing the control panel to hob and remove control panel from front of appliance.
d. Remove 2 screws holding shaft plate to gas control body and remove control shaft and plate. (See Fig 7). Note orientation of shaft for correct re-assembly.
e. Using needle nose pliers or similar, pull out gas control spindle, again noting its orientation.
f. Apply a suitable high temperature gas cock grease or lubricant such as ROCOL - A.S.P (Anti scuffing paste)/ Dry Moly Paste to outside of spindle. (See Fig 8).
g. Replace spindle and re-assemble gas control in reverse order.
h. Refit control panel to appliance and secure with 2 screws.
i. Refit knobs to gas control valve spindles.

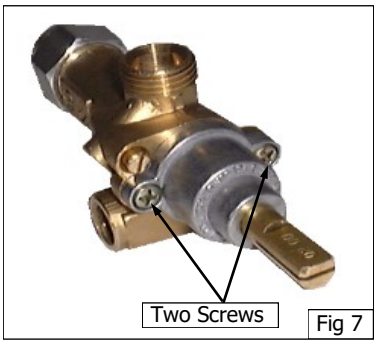

Fig 7

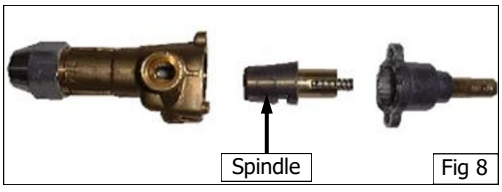

Fig 8

KW COMMERCIAL KITCHEN
Distributed by KW Commercial Kitchen | 1300 001 366
www.kwcommercial.com.au | sales@kwcommercial.com.au

This section provides an easy reference guide to more common problems that may occur during operation of your equipment. The fault finding guide in this section is intended to help you correct, or at least accurately diagnose problems with your equipment.

Although this section covers most common problems reported, you may encounter a problem not covered in this section. In such instances, please contact your local authorised service agent who will make every effort to help you identify and resolve the problem. Please note that the service agent will require the following information:-

- **Model Trade Name and Serial Number of Appliance. (Both can be found on Technical Data Plate located on appliance).**

Fault	Possible Cause	Remedy
Pilot won't light.	No gas supply. Blocked pilot injector.	Ensure gas isolation valve is turned 'On', and bottles are not empty. Call service provider.
Pilot goes out when gas control knob released.	Releasing knob before thermo-couple has heated. Pilot flame too small. - Gas pressure too low. - Partially blocked pilot injector. Thermocouple faulty.	Hold knob in for at least 20 seconds following ignition of pilot. Call service provider. Call service provider.
Main burner will not light.	Incorrect supply pressure. Faulty gas control.	Call service provider. Call service provider.

NOTE: Components having adjustments protected (e.g. paint sealed) by the manufacturer, are only to be adjusted by an authorised service agent. They are not to be adjusted by an unauthorised service person.

For Refrigeration Cabinet Fault Finding refer to Refrigeration Cabinet Installation and Operation Manual supplied with appliance.

KW COMMERCIAL KITCHEN
Distributed by KW Commercial Kitchen | 1300 001 366
www.kwcommercial.com.au | sales@kwcommercial.com.au

Conversion Procedure

Caution

Ensure Appliance is isolated from gas supplies before commencing servicing.

NOTE:

- **These conversions should only be carried out by qualified persons. All connections must be checked for leaks before re-commissioning appliance.**
- **Adjustment of components that have adjustments / settings sealed (e.g. paint sealed) can only be adjusted in accordance with the following instructions and shall be re-sealed before re-commissioning this appliance.**
- **For all relevant gas specifications refer to 'Gas Specification Tables' at rear of this section.**

Remove the following:-

- Control knob from target top control panel.
- Centre casting.
- Two half plate castings.
- Two front fire bricks.
- R/H main fire brick.

Main Burner Injectors

1. Remove main burner to reveal inner and outer ring injectors.
2. Remove injectors and replace with correct size injectors as shown in 'Gas Specifications Tables' at rear of this section.
3. Refit main burner to target top.

NOTE: Ensure main burner is pulled fully towards front of unit before tightening 2 main burner securing screws.

4. Set burner aeration screws 'X' and 'Y' for correct gas type aeration, as shown in 'Gas Specifications Tables' at rear of this section.

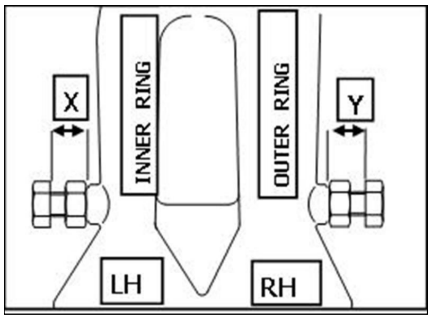

Pilot Burner

1. Disconnect gas supply tube from base of pilot burner.
2. Remove pilot burner and thermo couple retaining plate.
3. Remove pilot burner from mounting bracket.
4. Remove injector and spring from pilot burner and replace with correct size injector as shown in 'Gas Specifications Tables' at rear of this section.
5. Refit pilot burner to retaining bracket - ensuring pilot burner ports are at same height as thermocouple.

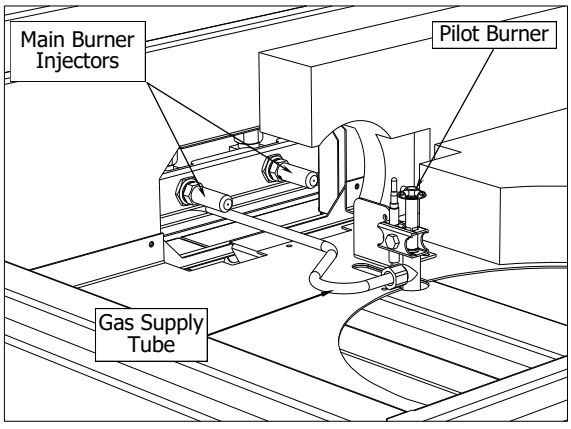

Distributed by KW Commercial Kitchen | 1300 001 366
www.kwcommercial.com.au | sales@kwcommercial.com.au

NOTE: Ensure pilot burner and thermocouple are correctly located and pilot burner aligns with main burner ignition port. (Refer to figure opposite for correct fitting and alignment dimensions).

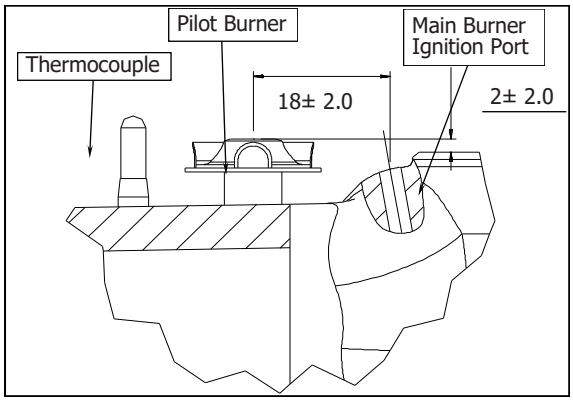

- Re-connect gas supply tube to pilot burner.
- Refit RH main fire brick.
- Refit 2 front fire bricks.
- Refit 2 half plate castings - ensure they are correctly interlocked.
- Refit centre casting.
- Refit front control panel and control knob.

Low Fire Adjustment

NOTE: Adjust low fire adjustment screw on gas control valve to as shown in 'Gas Specifications Tables' at rear of this section.

1. Light main burner and check flame size on simmer (LOW) position.

NOTE: 'Low Fire Screw' should be sealed with coloured paint on completion of low fire adjustment.

Gas Regulator

- NAT Gas / LPG / Butane Only.

NOTE: Gas regulator supplied is convertible between Natural Gas and LP Gas, but it's outlet pressure is fixed ex-factory and is NOT to be adjusted.

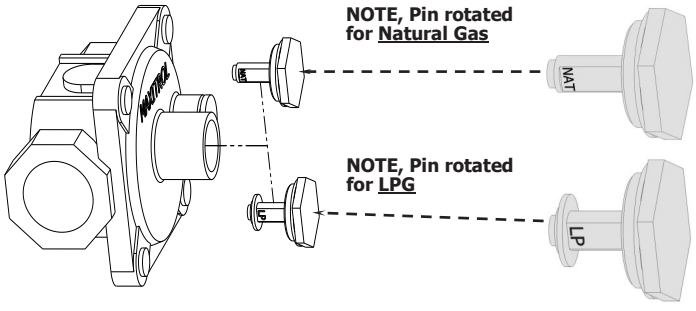

- Town Gas Only.

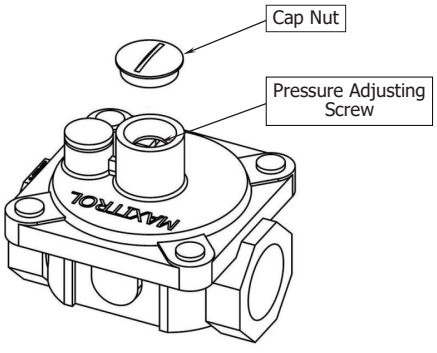

1. Remove slotted cap from regulator.
2. Turn 'On' gas supply and appliance.
3. Adjust pressure adjusting screw to achieve correct burner operating pressure.

NOTE: Measure operating pressure at manifold test point with two burners operating at 'High Flame' setting.

4. Turn 'Off' mains gas supply and bleed gas out of appliance gas lines.
5. Turn 'On' gas supply and appliance.
6. Verify operating pressure remains correct (Re-adjust regulator if required).
7. Screw cap nut back onto regulator.

KW COMMERCIAL KITCHEN
Distributed by KW Commercial Kitchen | 1300 001 366
www.kwcommercial.com.au | sales@kwcommercial.com.au

Gas Type Identification Label

On completion of gas conversion, replace gas type identification label, located at:-

- Rear of the unit, above the gas connection.
- Beside the Rating Plate.

Commissioning

Before leaving the installation;

1. Check all gas connections for leakages using soapy water or other gas detecting equipment.

Warning

DO NOT USE A NAKED FLAME TO CHECK FOR GAS LEAKAGES.

2. Carry out a 'Commissioning' check of appliance as shown in Installation Section of this manual.
3. Ensure any adjustments done to components that have adjustments / settings paint sealed are to be re-sealed.

Distributed by KW Commercial Kitchen | 1300 001 366
www.kwcommercial.com.au | sales@kwcommercial.com.au

Gas Specifications

- Australia:

	Natural Gas	LP Gas (Propane)
Main Burner Injector (Inner Ring)	Ø 1.70mm	Ø 1.10mm
Main Burner Injector (Outer Ring)	Ø 2.60mm	Ø 1.55mm
Pilot Burner Injector	0.35	0.25
Burner Aeration Screw X (Inner)	25mm	25mm
Burner Aeration Screw Y (Outer)	28mm	28mm
Low Fire Adjustment	$2^1/_2$ turns out (ccw)	1 turn out (ccw)
Burner Operating Pressure (*)	1.0 kPa	2.6 kPa
Gas Regulator Cap Screw		

- New Zealand:

	Natural Gas	LP Gas
Main Burner Injector (Inner Ring)	Ø 1.70mm	Ø 1.10mm
Main Burner Injector (Outer Ring)	Ø 2.60mm	Ø 1.55mm
Pilot Burner Injector	0.35	0.25
Burner Aeration Screw X (Inner)	25mm	25mm
Burner Aeration Screw Y (Outer)	28mm	28mm
Low Fire Adjustment	$2^1/_2$ turns out (ccw)	1 turn out (ccw)
Burner Operating Pressure (*)	1.0 kPa	2.6 kPa
Gas Regulator Cap Screw		

(*) Measure Burner operating pressure at target top hob manifold test point with target top burner (Inner and outer ring) operating at full setting. Operating pressure is ex-factory set, through appliance regulator and is not to be adjusted, apart from when carrying out gas conversion, if required. (Refer to details in 'Gas Conversion' section for information).

KW COMMERCIAL KITCHEN
Distributed by KW Commercial Kitchen | 1300 001 366
www.kwcommercial.com.au | sales@kwcommercial.com.au

- United Kingdom:

Category: **$II_{2H3P.}$**
Flue Type: **$A_{1.}$**

	Natural Gas (G20)	Propane (G31)
Main Burner Injector (Inner Ring)	Ø 1.70mm	Ø 1.10mm
Main Burner Injector (Outer Ring)	Ø 2.60mm	Ø 1.55mm
Pilot Burner Injector	0.35	0.25
Burner Aeration Screw X (Inner)	25mm	20mm
Burner Aeration Screw Y (Outer)	28mm	25mm
Low Fire Adjustment	2½ turns out (ccw)	1¾ turn out (ccw)
Burner Operating Pressure (*)	9.9 mbar	26.8 mbar
Gas Regulator Cap Screw		

(*) Measure Burner operating pressure at target top hob manifold test point with target top burner (Inner and Outer ring) operating at full setting. Operating pressure is ex-factory set, through appliance regulator and is not to be adjusted, apart from when carrying out gas conversion, if required. (Refer to details in 'Gas Conversion' section for information).

Distributed by KW Commercial Kitchen | 1300 001 366
www.kwcommercial.com.au | sales@kwcommercial.com.au

- All Other Markets:

	Natural Gas	Town Gas (**)
Main Burner Injector (Inner Ring)	Ø 1.70mm	Ø 4.20mm
Main Burner Injector (Outer Ring)	Ø 2.60mm	Ø 6.30mm
Pilot Injector	0.35	0.70
Burner Aeration Screw X (Inner)	25mm	20mm
Burner Aeration Screw Y (Outer)	28mm	25mm
Low Fire Adjustment	$2^1/_2$ turns out (ccw)	Blank 1½ turns out (ccw)
Burner Operating Pressure (*)	1.0 kPa	0.63 kPa
Gas Regulator Cap Screw		Adjustable Regulator (Adjust to the Burner Operating Pressure specified)

	LP Gas (Propane)	Butane
Main Burner Injector (Inner Ring)	Ø 1.10mm	Ø 1.00mm
Main Burner Injector (Outer Ring)	Ø 1.55mm	Ø 1.45mm
Pilot Injector	0.25	
Burner Aeration Screw X (Inner)	25mm	
Burner Aeration Screw Y (Outer)	28mm	
Low Fire Adjustment	1 turn out (ccw)	
Burner Operating Pressure (*)	2.6 kPa	
Gas Regulator Cap Screw		

NOTE:

- **(*) Measure burner operating pressure at target top hob manifold test point with target top burner (Inner and outer ring) operating at full setting.**
- **NAT, LPG & Butane Only - Operating pressure is ex-factory set and is not to be adjusted, apart from when converting between gasses, if required.**
- **(**) TOWN GAS Only - Burner operating pressure is to be adjusted using adjustable gas regulator supplied. Town Gas Option is only available with specific ex-factory built Town Gas models, which can also be converted to any other gas. Standard models can only be converted between Nat. Gas, LP Gas and Butane, but not Town Gas.**
- **Refer to the information in this section for further details.**

KW COMMERCIAL KITCHEN
Distributed by KW Commercial Kitchen | 1300 001 366
www.kwcommercial.com.au | sales@kwcommercial.com.au

Replacement Parts List

IMPORTANT:

Only genuine authorized replacement parts should be used for servicing and repair of this appliance. Instructions supplied with parts should be followed when replacing components.

For further information and servicing instructions, contact your nearest authorized service branch (contact details are as shown on reverse of front cover of this manual).

When ordering replacement parts, please quote part number and description as listed below. If part required is not listed below, request part by description and quote model number and serial number which is shown on rating plate. (Refer to 'Dimensions' section for location of rating plates for all model types).

Target Top

Controls

228853	Burner.		
230511	Pilot Burner Kit.		
235347	Thermocouple Kit.		
017800	Gas Control Valve	(Nat / LPG / Butane).	
227384	Gas Control Knob	(Nat / LPG / Butane).	
229699	Gas Control Valve	(Town Gas).	
229693	Gas Control Knob	(Town Gas).	
031170	Injector Inner Ring	(Nat)	Ø 1.70mm.
031110	Injector Inner Ring	(LPG)	Ø 1.10mm.
031100	Injector Inner Ring	(Butane)	Ø 1.00mm.
031420	Injector Inner Ring	(Town Gas)	Ø 4.20mm.
031260	Injector Outer Ring	(Nat)	Ø 2.60mm.
031155	Injector Outer Ring	(LPG)	Ø 1.55mm.
031145	Injector Outer Ring	(Butane)	Ø 1.45mm.
031630	Injector Outer Ring	(Town Gas)	Ø 6.30mm.
227985	Pilot Injector	(Nat)	0.35.
227984	Pilot Injector	(LPG / Butane)	0.25.
232310	Pilot Injector	(Town Gas)	0.70.

General

227012	Centre Casting.	
227013	Half Plate Casting.	
014997	Casting Removal Tool.	
229674	Rear Roller Assy.	
227855	Adjustable Leg	(84mm - Bench Models).
227850	Adjustable Leg (Flush Stud)	(150mm - CB / RB Models).
227851	Adjustable Leg Extd. Stud	(150mm - - LS Models).
232351	Rear Roller Assy 3"	(RB Models).

For Refrigeration Cabinet Replacement Parts refer to Refrigeration Cabinet Installation and Operation Manual supplied with appliance.

KW COMMERCIAL KITCHEN
Distributed by KW Commercial Kitchen | 1300 001 366
www.kwcommercial.com.au | sales@kwcommercial.com.au

Regulators

Gas Type	Gas Regulators	
	Part No.	Description
Nat. Gas LPG (Propane) Butane	**228531**	¾" BSP F/F Convertible.
Town Gas	**230185**	¾" BSP F/F Adjustable.

Accessories

228801 Refrigerator Base Plinth Kit.
228799 Cabinet Base / Leg Stand 900mm Plinth Kit.

Gas Conversion Kits

Model	Gas Type to Convert to:-			
	Nat. Gas	LPG	Butane	Town Gas (*)
RN8100G	231972	231971	231973	N/A (*)

NOTE: (*) Town Gas Option is only available with specific ex-factory built Town Gas models, which can also be converted to any other gas. Standard models can only be converted between Nat. Gas, LP Gas and Butane, but not Town Gas.

For Refrigeration Cabinet Specifications refer to Refrigeration Cabinet Installation and Operation Manual supplied with appliance.

KW COMMERCIAL KITCHEN
Distributed by KW Commercial Kitchen | 1300 001 366
www.kwcommercial.com.au | sales@kwcommercial.com.au