PRODUCT DOCUMENT PACK

Prepared and distributed by KW Commercial Kitchen

PRODUCT

Waldorf RN8104E-RB 900mm Electric Solid Top - Refrigerated Base

Model / SKU: RN8104E-RB

KW COMMERCIAL KITCHEN

7/72 Canterbury Road, Bankstown NSW 2200

Phone 1300 001 366

Email sales@kwcommercial.com.au

Web www.kwcommercial.com.au

Scan for the current KW product page

DOCUMENT NOTICE

The supplier document begins on the next page. KW contact branding is added in a separate footer area and does not replace the supplier's instructions, specifications or warranty terms.

Official supplier source: https://moffat.global.ssl.fastly.net/sites/default/files/products/manual/249342-4.pdf

Waldorf®
800 SERIES

Installation and Operation Manual

Electric Solid Top

RN8104E

Date Purchased

Serial Number

Dealer

Service Provider

For use in GB & IE

249342-4

KW COMMERCIAL KITCHEN
Distributed by KW Commercial Kitchen | 1300 001 366
www.kwcommercial.com.au | sales@kwcommercial.com.au

MANUFACTURED BY

Moffat Limited
Rolleston 7675
New Zealand

INTERNATIONAL CONTACTS

AUSTRALIA

Moffat Pty Limited

Web:	www.moffat.com.au
E.Mail:	vsales@moffat.com.au
Main Office:	(tel) +61 (03) 9518 3888
	(fax) +61 (03) 9518 3833
Service:	(tel): 1800 622 216
Spares:	(tel): 1800 337 963
Customer Service:	(tel): 1800 335 315
	(fax): 1800 350 281

CANADA

Serve Canada

Web:	www.servecanada.com
E.Mail:	info@servecanada.com
Sales:	(tel): 800 551 8795 (Toll Free)
Service:	(tel): 800 263 1455 (Toll Free)

NEW ZEALAND

Moffat Limited

Web:	www.moffat.co.nz
E.Mail:	sales@moffat.co.nz
Main Office:	(tel): 0800 663328

UNITED KINGDOM

Blue Seal

Web:	www.blue-seal.co.uk
E.Mail:	sales@blue-seal.co.uk
Sales:	(tel): +44 121 327 5575
	(fax): +44 121 327 9711
Spares:	(tel): +44 121 322 6640
	(fax): +44 121 327 9201
Service:	(tel): +44 121 322 6644
	(fax): +44 121 327 6257

UNITED STATES

Moffat

Web:	www.moffat.com
Sales:	(tel): 1-800 551 8795 (Toll Free)
	(tel): 336 661 1556
	(fax): 336 661 9546
Service:	(tel): 866 673 7937 (Toll Free USA only)

REST OF WORLD

Moffat Limited

Web:	www.moffat.co.nz
E.Mail:	export@moffat.co.nz

The reproduction or copying of any part of this manual by any means whatsoever is strictly forbidden unless authorized previously in writing by the manufacturer.

In line with policy to continually develop and improve its products, Moffat Ltd. reserves the right to change the specifications and design without prior notice.

© Copyright Moffat Ltd. December 2024.

Waldorf Electric Solid Top

RN8104E Electric Solid Top, 900 mm

Introduction 2

Specifications 3
Model Numbers Covered in this Specification
Electrical Supply Requirements
Electrical Connection

Dimensions 4

Installation 8
Installation Requirements
Unpacking
Location
Clearances
Assembly
Electrical Connection
Commissioning

Operation 11
Operation Guide
Description of Controls

Cleaning and Maintenance 13
General
After Each Use
Daily Cleaning

Fault Finding 15

Circuit Schematics 16

Wiring Diagrams 17

Replacement Parts List 18

1 Introduction

We are confident that you will be delighted with your WALDORF ELECTRIC SOLID TOP, and it will become a most valued appliance in your commercial kitchen.
To ensure you receive the utmost benefit from your new WALDORF Appliance, there are two important things you can do.

Firstly:

Please read the instruction book carefully and follow the directions given. The time taken will be well spent.

Secondly:

If you are unsure of any aspect of the installation, instructions or performance of your appliance, contact your WALDORF dealer promptly. In many cases a phone call could answer your question.

CE Only:

These instructions are only valid if the country code appears on the appliance. If the code does not appear, refer to the supplier of this appliance to obtain the technical instructions for adapting the appliance to the conditions for use in that country.

Recognise safety information:

Safety alert symbol.
When you see this symbol in the manual or on the appliance, pay special attention to the instructions.

Read the instructions before using this appliance.

Risk of electric shock.

WARNING:

IMPROPER INSTALLATION, ADJUSTMENT, ALTERATION, SERVICE OR MAINTENANCE CAN CAUSE PROPERTY DAMAGE, INJURY OR DEATH. READ THE INSTALLATION, OPERATING AND MAINTENANCE INSTRUCTIONS THOROUGHLY BEFORE INSTALLING OR SERVICING THIS APPLIANCE.

WARNING:

GREAT CARE MUST BE TAKEN BY THE OPERATOR TO USE THE EQUIPMENT SAFELY TO GUARD IT AGAINST RISK OF FIRE.

- **THE APPLIANCE MUST NOT BE LEFT ON UNATTENDED.**
- **IT IS RECOMMENDED THAT A REGULAR INSPECTION IS MADE BY A COMPETENT SERVICEMAN TO ENSURE CORRECT AND SAFE OPERATION OF YOUR APPLIANCE IS MAINTAINED.**
- **DO NOT STORE OR USE GASOLINE OR OTHER FLAMMABLE VAPOURS OR LIQUIDS IN THE VICINITY OF THIS OR ANY OTHER APPLIANCE.**
- **DO NOT SPRAY AEROSOLS IN THE VICINITY OF THIS APPLIANCE WHILE IT IS IN OPERATION.**
- **DO NOT USE WATER JET, SPRAY, OR STEAM CLEANER TO CLEAN THIS APPLIANCE.**

CAUTION:

This appliance is;

- **Intended for commercial use only, in kitchens of restaurants, canteens, and so on. This appliance is not inteneded for use in continuous mass production of food.**
- **For professional use and is only to be used by suitably qualified / trained persons.**
- **Only qualified service persons are to carry out installation, servicing and gas conversion operations.**
- **Components having adjustments protected (e.g. paint sealed) by the manufacturer should not be adjusted by the user / operator.**
- **DO NOT operate the appliance without the legs supplied fitted.**

KW COMMERCIAL KITCHEN
Distributed by KW Commercial Kitchen | 1300 001 366
www.kwcommercial.com.au | sales@kwcommercial.com.au

Model Numbers Covered in this Specification

Model Number	Model Type	Total Power Input	Net Weight
RN[1]8104E - B	Bench Model	10.8 kW	120 kg
RN[1]8104E - LS	Leg Stand Model	10.8 kW	131 kg
RN[1]8104E - CB	Cabinet Base Model	10.8 kW	135 kg
RN[1]8104E - RB	Refrigeration Model	10.8 kW	160 kg

NOTE:

[1]: - Model Options;

- \- Standard.
- L - Low Back.
- B - Bold Front.
- LB - Low Back and Bold Front.

Electrical Supply Requirements

Model	Electrical Supply			Nominal Rating				
	Voltage	Power	Frequency	Power Input	Current (A)			Voltage
					L1	L2	L3	
RN8104E	400-415 Vac	3 P+N+E	50 / 60 Hz	10.8 kW	18.0	18.0	11.2	415 Vac
	380-415 Vac	3 P+N+E	50 / 60 Hz	10.0 kW	17.1	17.1	10.9	400 Vac

Electrical Connection

WARNING:

THIS APPLIANCE MUST BE EARTHED. IF THE SUPPLY CORD IS DAMAGED, IT MUST BE REPLACED BY A SUITABLY QUALIFIED PERSON IN ORDER TO AVOID A HAZARD.

Electrical supply connection point is located at the rear of the appliance, approximately 130mm from the right hand side and 30mm from the rear of the appliance. 85mm from bench height on bench models and 675mm from the floor on leg stand and cabinet base models. (Refer to the 'Dimensions' section).

When connecting this electric appliance to the mains supply, ensure that the following is carried out:

- An isolating switch is fitted within 2m of the appliance, but not on the appliance and in such a position that the user does not have to reach across the cooking surface.
- Supply cord shall be oil-resistant, sheathed flexible cable and not lighter than ordinary polychloroprene or other equivalent synthetic elastomer sheathed cord (as per AS / NZS 3191 part 2.10.11. or IEC 60245-IEC-57) e.g. HO5 RN-F Type.
- The branch supply line shall be individually overload protected to the correct current rating and the supply cord shall be protected against any mechanical or thermal damage.
- A cable gland is fitted to the wiring entry hole at the rear of the appliance.
- All wiring connections must be tight.
- If the appliance is intended to be moved for cleaning, then it shall be installed with flexible power supply and equipotential bonding connections. The installation shall allow the appliance to be moved forward by at least 1320 mm without the flexible connections becoming taut or strained.
- A residual-current device (RCD) is recommended for protection of the power supply to this appliance.

Refer to the appropriate wiring standards for the size of cable that is to be supplied to an appliance for the current drawn on that line.

KW COMMERCIAL KITCHEN
Distributed by KW Commercial Kitchen | 1300 001 366
www.kwcommercial.com.au | sales@kwcommercial.com.au

3 Dimensions

Dimensions for Bench Models

RN8104E - B

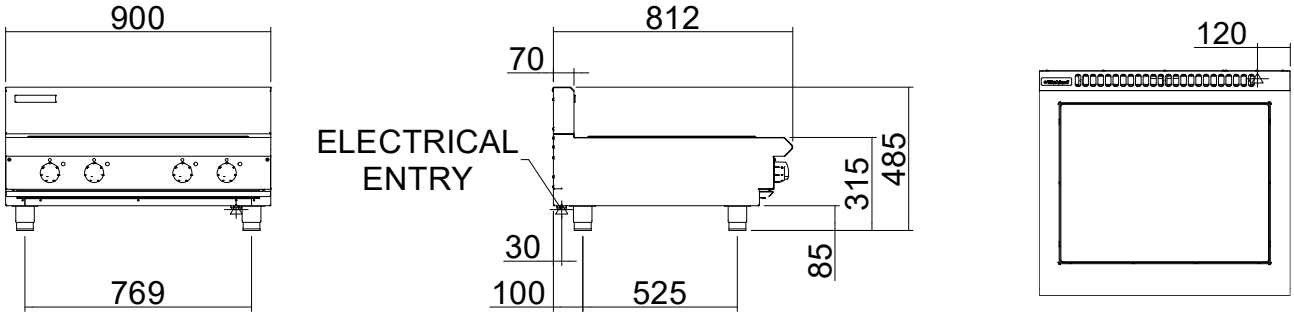

RN(L)8104E - B

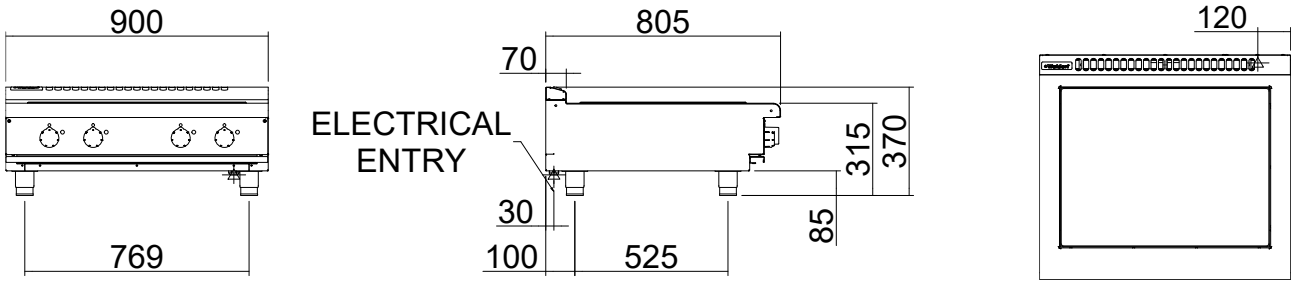

= ELECTRICAL CONNECTION POINT.

Distributed by KW Commercial Kitchen | 1300 001 366
www.kwcommercial.com.au | sales@kwcommercial.com.au

Dimensions for Leg Stand Models

(R) = Rating Plate Location for this option.

RN8104E - LS

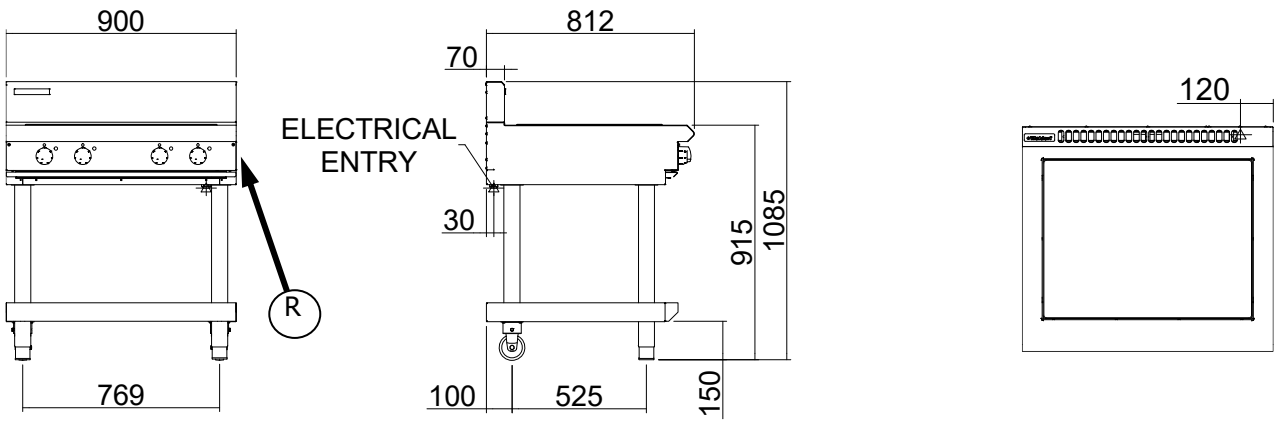

RN(L)8104E - LS

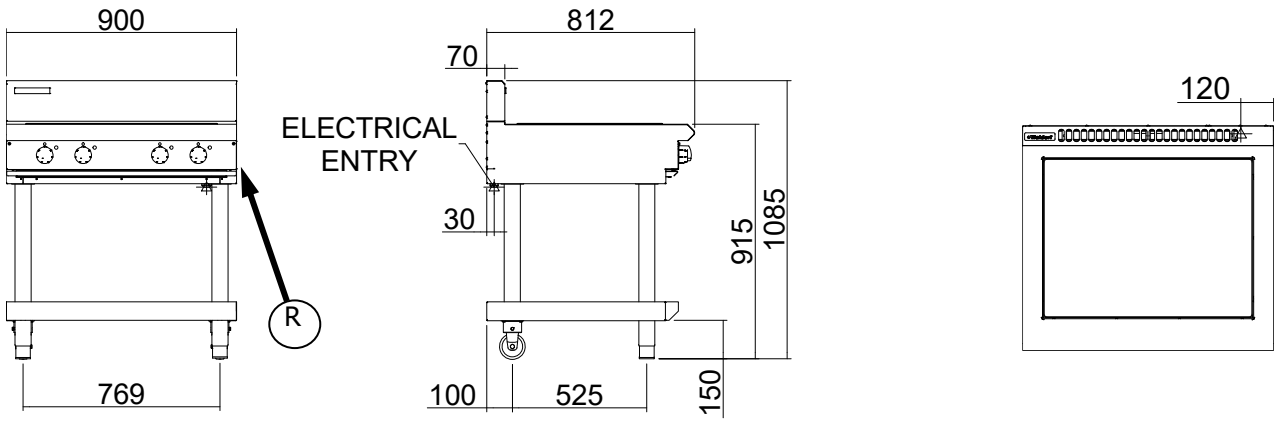

= ELECTRICAL CONNECTION POINT.

Distributed by KW Commercial Kitchen | 1300 001 366
www.kwcommercial.com.au | sales@kwcommercial.com.au

Dimensions for Cabinet Models

(R) = Rating Plate Location for this option.

RN8104E - CB

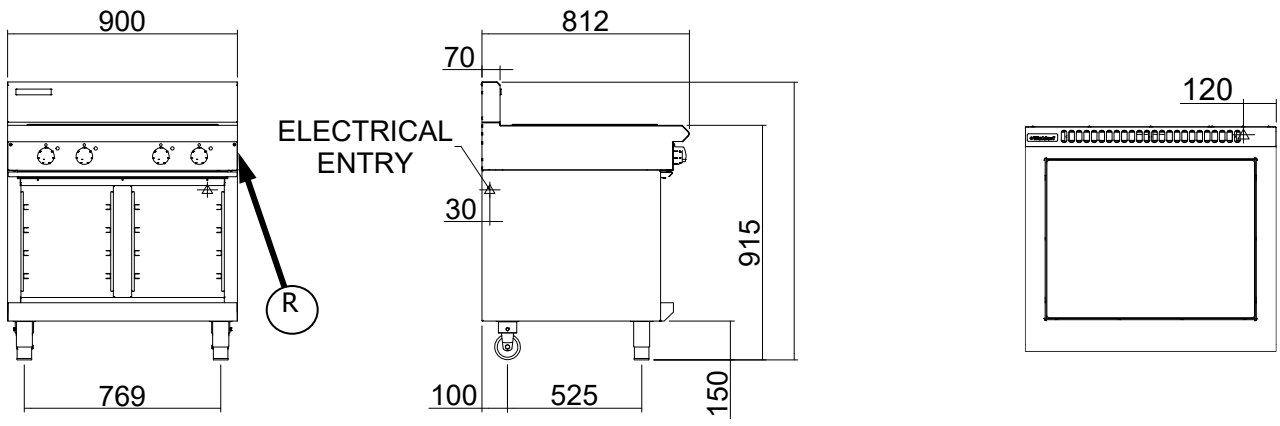

RN(L)8104E - CB

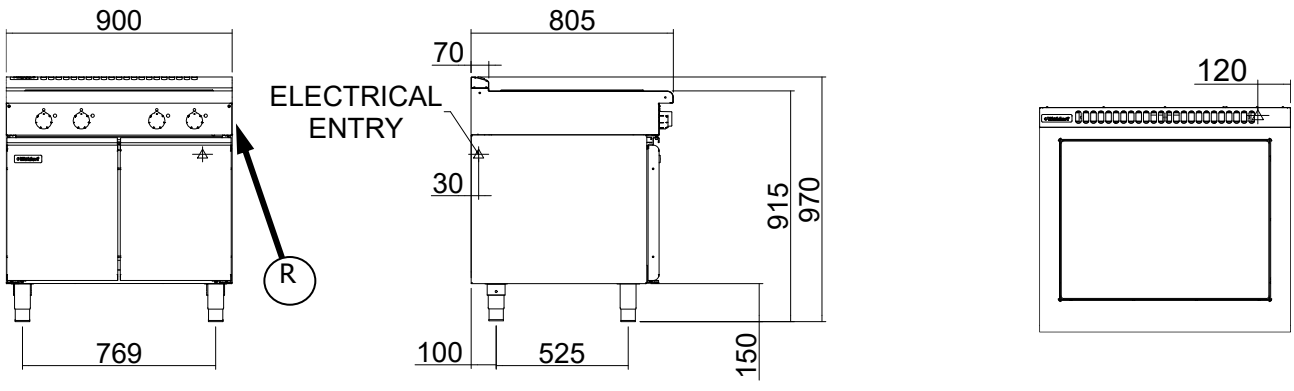

Distributed by KW Commercial Kitchen | 1300 001 366
www.kwcommercial.com.au | sales@kwcommercial.com.au

Dimensions for Refrigerated Base Models

(R) = Rating Plate Location for this option.

RN8104E - RB

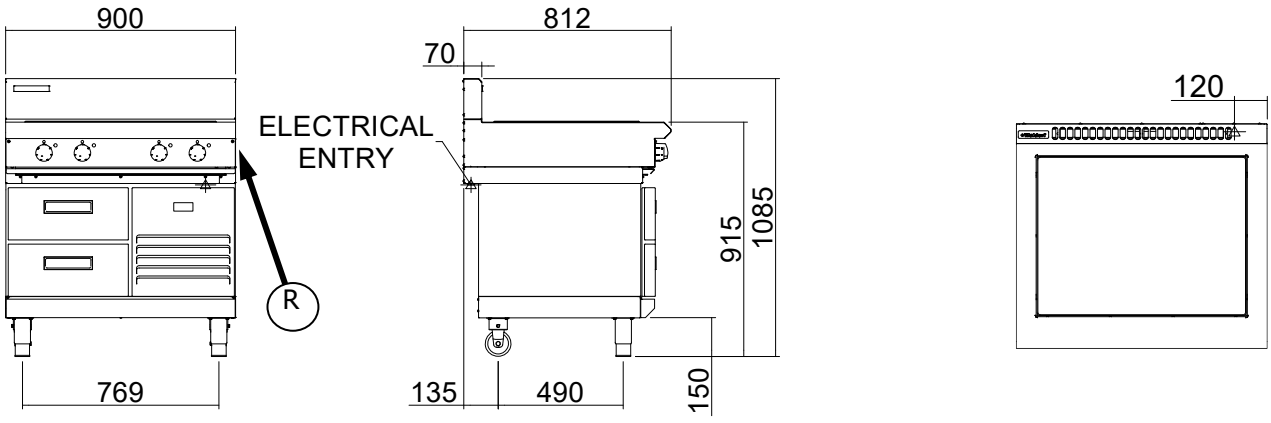

RN(L)8104E - RB

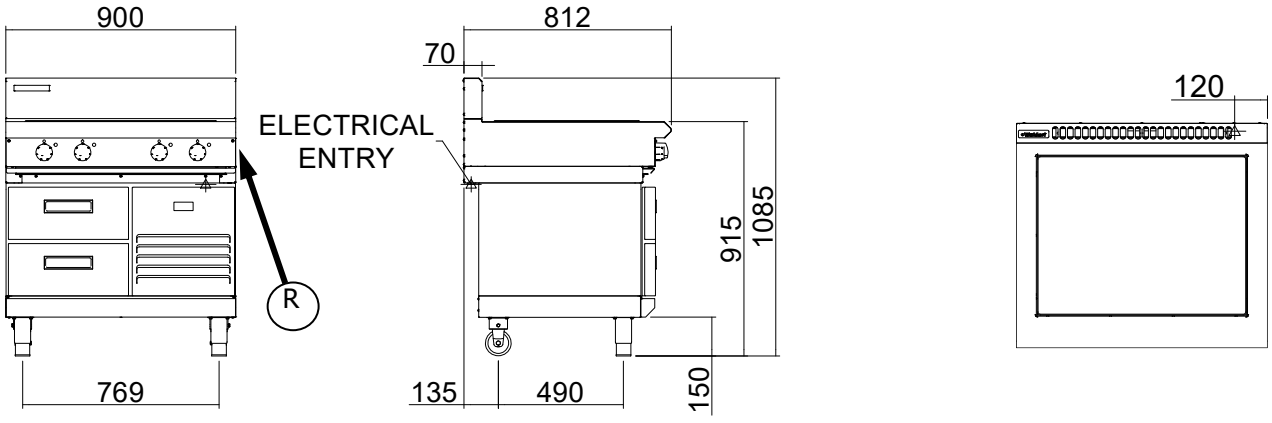

For the Refrigeration Cabinet Operation refer to the Refrigeration Cabinet Installation and Operation Manual supplied with the appliance.

KW COMMERCIAL KITCHEN
Distributed by KW Commercial Kitchen | 1300 001 366
www.kwcommercial.com.au | sales@kwcommercial.com.au

4 Installation

Installation Requirements

NOTE:

- **It is most important that this Electric Solid Top is installed correctly and that operation is correct before use. Installation shall comply with local electrical and health and safety requirements.**
- **This appliance shall be installed with sufficient ventilation to prevent the occurrence of unacceptable concentrations of health harmful substances in the room the appliance is installed in.**

Waldorf appliances are designed to provide years of satisfactory service, and correct installation is essential to achieve the best performance, efficiency and trouble-free operation.
This appliance must be installed in accordance with National installation codes and, in addition, in accordance with relevant National / Local codes covering electrical and fire safety.

Australia / New Zealand	AS / NZS3000	- Wiring Rules.
United Kingdom:	BS 7671	- Requirements for Electrical Installations.

Installations must be carried out by authorised persons only. Failure to install equipment to the relevant codes and manufacturer's specifications shown in this section will void the warranty.

Unpacking

- Remove all packaging and transit protection from the appliance including all protective plastic coating from the exterior stainless steel panels.
- Check equipment and parts for damage. Report any damage immediately to the carrier and distributor.
- Report any deficiencies to the distributor who supplied the appliance.
- Check that the available electrical supply is correct to that shown on the Rating Plate attached to the R/H underside of the front Cooktop lower trim, for Bench, Cabinet Base and Leg Stand Models. For the Refrigerated Base Models the rating Plate is located on the R/H underside of the sill.

Location

1. Installation must include adequate clearance and ventilation.
2. Position the appliance in its approximate working position.
3. The legs must always be fitted to the base of the appliance. Ensure that the legs are securely attached.

Clearances

NOTE: This appliance should only be placed in close proximity to walls, partitions, furniture, or other surfaces if they are made of or cladded with non-combustible material.

	Combustible Surface	Non Combustible Surface
Left / Right Hand Side	400 mm	0 mm
Rear	400 mm	0 mm

.

KW COMMERCIAL KITCHEN
Distributed by KW Commercial Kitchen | 1300 001 366
www.kwcommercial.com.au | sales@kwcommercial.com.au

Assembly

CAUTION:

- **This appliance is for professional use and is to be used by qualified persons only.**
- **Only qualified service persons are to carry out installation and servicing of this appliance.**

Bench Mount (B) Models

1. Check that all the feet are fitted.
2. Adjust the four feet to make the hob steady and level.

Optional Accessories (Refer to Replacement Parts List)

- Plinth Kit. For installation details, refer to the instructions supplied with each kit.

Leg Stand (LS) Models Only

CAUTION:

The solid top plate is not fixed to the hob. Ensure that it is removed or securely retained in place before assembly of the leg stand.

1. Lower the appliance onto its rear face.
2. Attach the four hob legs to the leg mount points on the underside of the hob unit.
3. Secure each leg hand tight.
4. Align the 4 round holes in the corners of the base tray with the 4 hob legs already fitted. (Ensure that the base tray is orientated with the sloping edge of the base tray facing the front of the appliance).
5. Slot the base tray onto the 4 hob legs and push fully home.
6. Secure the base tray to the front hob legs by screwing the adjustable feet supplied, into the base of the front hob legs. Secure each adjustable foot, hand tight.
7. Fit the rear leg securing bolts up through the centre of the rear leg ring plates to secure the rear of the base tray to the rear hob legs and tighten up the bolts using a 24mm socket.
8. Fit the rear rollers to the rear leg ring plates and secure using the locating bolts supplied and tighten bolts using a 10mm spanner.
9. Lift the appliance back onto its legs.

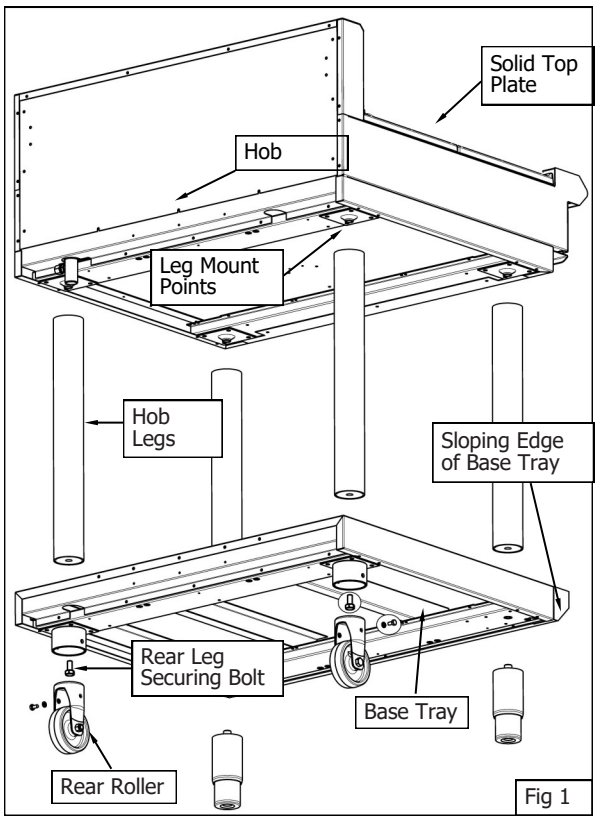

Fig 1

NOTE: This appliance is fitted with adjustable feet / rear rollers to enable the appliance to be positioned securely and level. This should be carried out on completion of the electrical connection. Refer to the 'Electrical Connection' section.

All Other Models

All other models come pre-assembled.

KW COMMERCIAL KITCHEN
Distributed by KW Commercial Kitchen | 1300 001 366
www.kwcommercial.com.au | sales@kwcommercial.com.au

Electrical Connection

WARNING:

THIS APPLIANCE MUST BE EARTHED. IF THE SUPPLY CORD IS DAMAGED, IT MUST BE REPLACED BY A SUITABLY QUALIFIED PERSON IN ORDER TO AVOID A HAZARD.

NOTE: ALL ELECTRICAL CONNECTIONS MUST ONLY BE CARRIED OUT BY AN AUTHORISED PERSON.

Each appliance should be connected to an adequately protected power supply and isolation switch mounted adjacent to, but not behind the appliance. This switch must be clearly marked and readily accessible in case of fire.

1. Check that the electricity supply is correct as shown on the Rating Plate. Refer to the 'Dimensions Section' for rating plate locations for the different model types.
2. The supply terminal connections are located at the rear of the the appliance. Refer to 'Electrical Connections' in the 'Specifications' section of the manual.
3. Bring the supply cable up through the compression type gland provided on the rear of the appliance.
4. Connect the mains supply to L1, L2 and L3 connections as required. Refer to the 'Electrical Supply Requirements' section.
5. Connect neutral and earth conductors to the neutral and earth connections respectively.
6. For all connections ensure that conductors are secure and appropriately terminated.
7. Tighten the cable gland to secure against tension on the cable.

NOTE:

- **This appliance must be earthed.**
- **Fixed wiring installations must incorporate an all-pole disconnection switch.**

8. Correctly locate the appliance into its final operating position and using a spirit level, adjust the legs so that the appliance is level and at the correct height.
9. Connect the power supply to the appliance.
10. Check that the electrical supply is as shown in "Specifications" section.

Commissioning

1. Before leaving the new installation;
   a. Check the following functions in accordance with the operating instructions specified in the 'Operation' section of this manual.
      - Check that all the connections are correct.
      - Check the current draw and voltage is within the electrical specification required.
      - Check that all cover panels have been re-fitted.
      - Check that the appliance functions in accordance with the operating instructions.
      - Ensure that this instruction manual is left with the appliance.
      - Ensure that all the relevant details and contacts have been added to the front of this manual.

   b. Ensure that the operator has been instructed in the areas of correct operation and shutdown procedure for the appliance.
2. This manual must be kept by the owner for future reference and as a record of **Date of Purchase, Date of Installation** and **Serial Number of Unit** recorded and kept with this manual. **(These details can be found on the Rating Plate. Refer to the 'Dimensions' section for rating plate location)**.

KW COMMERCIAL KITCHEN
Distributed by KW Commercial Kitchen | 1300 001 366
www.kwcommercial.com.au | sales@kwcommercial.com.au

Operation Guide

CAUTION:

- **This appliance is for professional use and is only to be used by qualified people.**
- **Only authorised service persons should be used to carry out installation or servicing operations.**

1. Waldorf appliances have been designed to provide simplicity of operation.

   A commercial heavy duty, electric Cooktop is available in 900mm wide size and in 4 model types:
   Bench Model.
   With Cabinet Base.
   With Leg Stand.
   With Refrigerated Base.

2. Despite the Cooktop's commercial heavy duty robust construction, incorrect operation practices can reduce the life of the appliance and produce a poor quality product. To use this appliance correctly please read the following carefully.

(Model RN8104E - B Shown)
16Mo3 Chrome-Moly Steel Solid Top

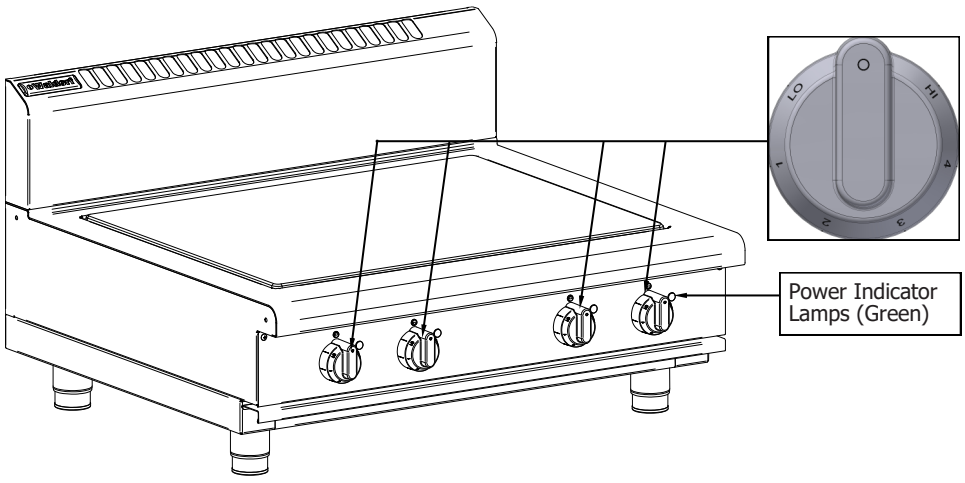

Heat Control Knobs (Elements)

O	OFF Position
LOW	Position
1	Position
2	Position
3	Position
4	Position
HIGH	Position

For the Refrigeration Cabinet Description of Controls, refer to the Refrigeration Cabinet Installation and Operation Manual supplied with the appliance.

KW COMMERCIAL KITCHEN
Distributed by KW Commercial Kitchen | 1300 001 366
www.kwcommercial.com.au | sales@kwcommercial.com.au

Solid-Top Operation

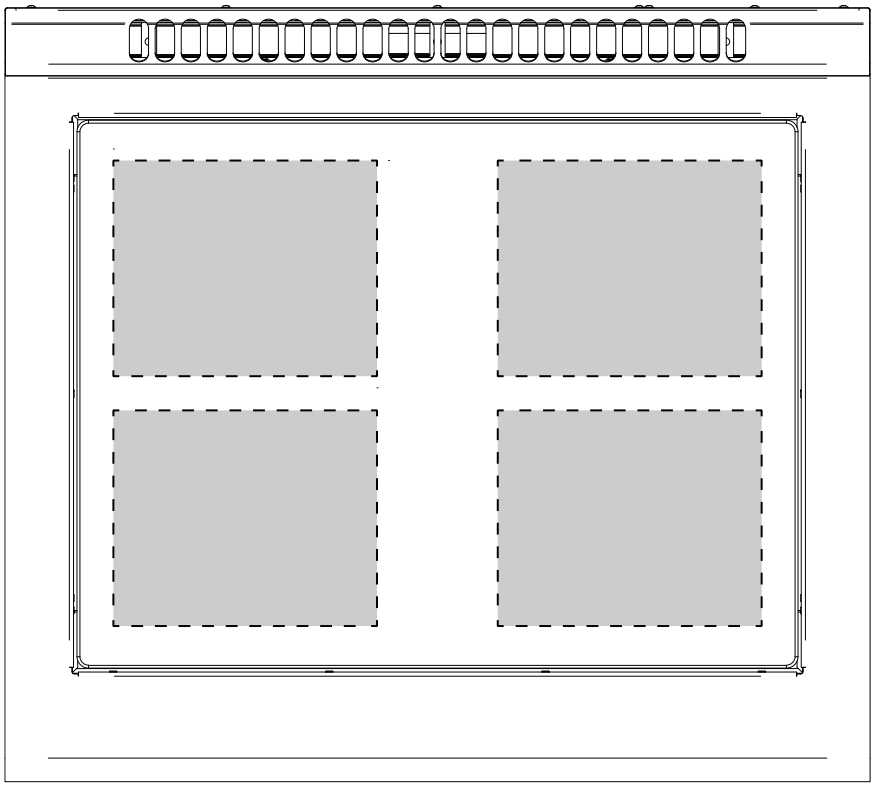

The solid-top has four independent heating zones as shown above.

The controls for the solid-top may be set at any position between high and low to provide the desired level of heating. An individual green neon for each element, will glow when the element is powered on, i.e. heat control is set to an "ON" position.

Start cooking at the highest setting, and change to a lower setting when the desired temperature is reached.

For maximum speed and economy, it is most important that cooking pots/pans should be placed over the required cooking zone.
Cooking pots/pans should have perfectly flat bases. Any part of the pot/pan which is not making effective contact with the base of the solid-top decreases the efficiency of the solid-top.

NOTE:

- **If for any reason it is not possible to get the unit to operate correctly, turn off the electrical power supply and contact a qualified service person. The supplier of this unit will be able to recommend a suitable person.**
- **Make sure that the electrical supply is turned "Off" before any service or maintenance work is carried out.**

KW COMMERCIAL KITCHEN
Distributed by KW Commercial Kitchen | 1300 001 366
www.kwcommercial.com.au | sales@kwcommercial.com.au

General

CAUTION:

Always turn off the electrical power supply at the mains supply before cleaning.

This appliance is not water proof.

Do not use water jet spray or steam cleaner to clean interior or exterior of this appliance.

Clean the solid-top regularly. A clean appliance looks better, will last longer and will perform better. Carbonised grease on the surface will hinder the transfer of heat from the cooking surface to the food. This will result in loss of cooking efficiency.

DO NOT use water on the appliance while this item is still hot as warping and cracking may occur. Allow the appliance to cool down before cleaning.

NOTE:

- **DO NOT use abrasive detergents, strong solvents or caustic detergents as they could corrode or damage the appliance.**
- **In order to prevent the forming of rust on the solid-top, ensure that any detergent or cleaning material has been completely removed after each cleaning. The appliance should be switched on briefly to ensure that the solid-top is dry. Oil or grease should be wiped over the solid-top surface in order to form a thin protective greasy film.**

To keep your solid-top clean and operating at peak efficiency, follow the below procedures:

After Each Use

1. Clean the solid-top with a soft scrubbing brush to remove any food debris.

Daily Cleaning

1. Thoroughly clean the splash back and exterior surfaces of the appliance with hot water, a detergent solution and a soft scrubbing brush.
2. Clean the Control Panel with a damp cloth lightly moistened with a solution of mild detergent and water. Dry the control panel thoroughly with a dry cloth and polish with a soft dry cloth.
3. Brush the solid-top surface with a soft bristled brush. Any carbon deposits should be removed using a scraper tool, followed by wiping with a cloth moistened with a solution of mild detergent and hot water to prevent accumulation of food deposits.
4. Dry the appliance thoroughly with a dry cloth and polish with a soft dry cloth.

KW COMMERCIAL KITCHEN
Distributed by KW Commercial Kitchen | 1300 001 366
www.kwcommercial.com.au | sales@kwcommercial.com.au

6 Cleaning and Maintenance

Weekly Cleaning

NOTE:

- **If the appliance usage is very high, we recommend that the weekly cleaning procedure is carried out on a more frequent basis.**
- **Ensure that protective gloves are worn during the cleaning process.**
- **DO NOT use harsh abrasive detergents, strong solvents or caustic detergents as they will damage the appliance.**
- **DO NOT use water on the solid-top while it is still hot as warping may occur. Allow the casting to cool for cleaning.**

NOTE: In order to prevent the forming of rust on the solid-top, ensure that all detergent and cleaning material has been entirely removed after each cleaning process. The appliance should be switched on briefly to ensure the solid-top is dry. Oil or grease should be wiped over the solid-top surface in order to form a thin protective greasy film.

Solid Top Cooking Area

a. Clean the solid-top area with a soft cloth and a mild detergent and hot water solution.
b. Baked on deposits or discolouration may require a good quality stainless steel cleaner or stainless steel wool. Always apply cleaner when the appliance is cold and rub in the direction of the grain.

Stainless Steel Surfaces

a. Clean the exterior surfaces of the appliance with hot water, a mild detergent solution and a soft scrubbing brush. Note that the control knobs are a push fit onto the control spindles and can be removed to allow cleaning of the front control panel.
b. Baked on deposits or discolouration may require a good quality stainless steel cleaner or stainless steel wool. Always apply cleaner when the appliance is cold and rub in the direction of the grain.
c. Dry all components thoroughly with a dry cloth and polish with a soft dry cloth.

Periodic Maintenance

To achieve the best results cleaning must be regular and thorough and all controls and mechanical parts checked and adjusted periodically by a competent serviceman. If any small faults occur, have them attended to promptly. Don't wait until they cause a complete breakdown. It is recommended that the appliance is serviced every 6 months.

KW COMMERCIAL KITCHEN
Distributed by KW Commercial Kitchen | 1300 001 366
www.kwcommercial.com.au | sales@kwcommercial.com.au

This section provides an easy reference guide to the more common problems that may occur during the operation of your appliance. The fault finding guide in this section is intended to help you correct, or at least accurately diagnose problems with your equipment.

Although this section covers the most common problems reported, you may encounter a problem not covered in this section. In such instances, please contact your local authorised service agent who will make every effort to help you identify and resolve the problem. Please note that the service agent will require the following information:

- **The Model Trade Name and the Serial Number of the Appliance. (Both can be found on the Technical Data Plate located on the appliance)**

Fault	Possible Cause	Remedy
Element does not work when turned 'ON'.	Check for an electrical short by checking that there is NO continuity between any "phase in" line and the metal appliance body itself. Check for the item failing (element, control etc.) using a multimeter.	Call the service provider.
Complete power failure of the appliance	Check fuse connection at the wall. Ensure that the fuse size is correct to carry the load. Check for an electrical short to the appliance.	Replace the blown fuse. Call the service provider.

KW COMMERCIAL KITCHEN
Distributed by KW Commercial Kitchen | 1300 001 366
www.kwcommercial.com.au | sales@kwcommercial.com.au

RN8104E - 900 mm Solid Top

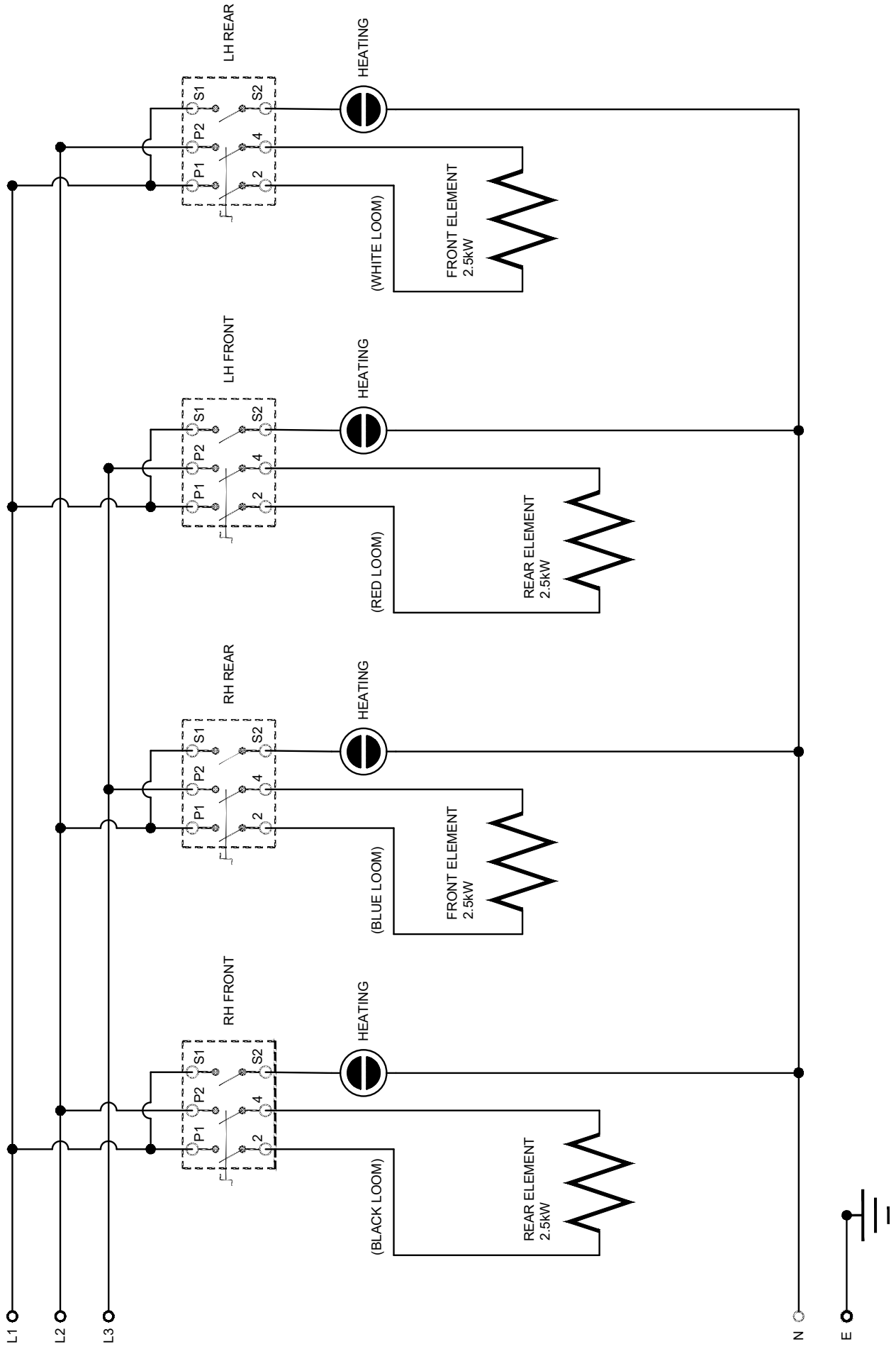

KW COMMERCIAL KITCHEN
Distributed by KW Commercial Kitchen | 1300 001 366
www.kwcommercial.com.au | sales@kwcommercial.com.au

RN8104E - 900 mm Solid Top

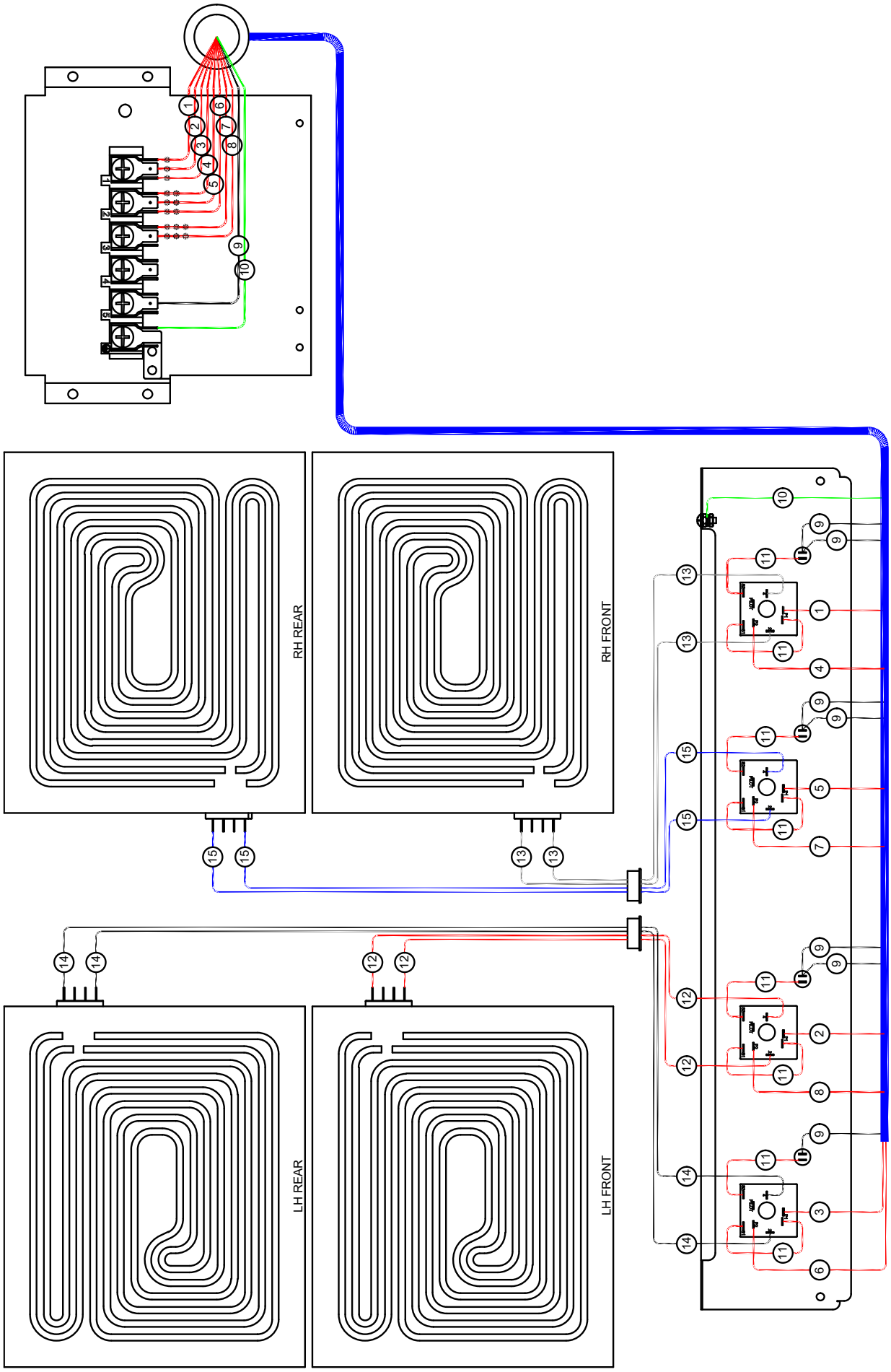

Distributed by KW Commercial Kitchen | 1300 001 366
www.kwcommercial.com.au | sales@kwcommercial.com.au

Replacement Parts List

IMPORTANT:

Only genuine authorized replacement parts should be used for the servicing and repair of this appliance. The instructions supplied with the parts should be followed when replacing components.

For further information and servicing instructions, contact your nearest authorized service branch (contact details are as shown on the reverse of the front cover of this manual).

When ordering replacement parts, please quote the part number and the description as listed below. If the part required is not listed below, request the part by description and quote model number and serial number which is shown on the rating plate.

Solid Top

242995K	Energy Regulator 240 V 50 Hz
238768	Switch Rotary On-off 2P
238765	Indicator Green
248171	Knob Waldorf 6 mm
249315	Electric Solid Heating Element

General

227855	Leg 80 mm	B models only
227851	Leg 150 mm (Extended Stud)	LS models only
240534	Leg Assembly 150 mm X Ø63 mm C/W Plate	CB models only
229674	Rear Roller Assembly	LS and CB models only

Accessories

228799	900mm 50 mm Plinth Kit

KW COMMERCIAL KITCHEN
Distributed by KW Commercial Kitchen | 1300 001 366
www.kwcommercial.com.au | sales@kwcommercial.com.au