PRODUCT DOCUMENT PACK

Prepared and distributed by KW Commercial Kitchen

PRODUCT

Waldorf RN8406G-LS 600mm Gas Cooktop Leg Stand

Model / SKU: RN8406G-LS

KW COMMERCIAL KITCHEN

7/72 Canterbury Road, Bankstown NSW 2200

Phone 1300 001 366

Email sales@kwcommercial.com.au

Web www.kwcommercial.com.au

Scan for the current KW product page

DOCUMENT NOTICE

The supplier document begins on the next page. KW contact branding is added in a separate footer area and does not replace the supplier's instructions, specifications or warranty terms.

Official supplier source: https://moffat.global.ssl.fastly.net/sites/default/files/products/specification/RN840XG_AN.pdf

Technical data sheet for

GAS COOKTOPS 600mm

RN8400G-B, RN8400G-CB, RN8400G-LS, RN8403G-B, RN8403G-CB, RN8403G-LS, RN8406G-B, RN8406G-CB, RN8406G-LS

RN8400G-LS

- Heavy-duty construction
- 28 MJ/hr open burners
- Flame failure standard
- Pilot burners optional
- 300mm griddle plate options
- Optional simmer plates
- 3 models of base unit
- Stainless steel exterior
- Easy clean
- Easy service
- Fully modular
- Low back models (RNL) available

Overall Construction

Cooktop

- Welded hob with 1.5mm 304 stainless steel bull nose
- Splashback and side panels 1.2mm 304 stainless steel
- Front panels 0.9mm 304 stainless steel
- Aluminised steel internal construction
- Cast iron 28MJ/hr open burners with forged brass cap
- Vitreous enamelled cast iron potstands
- Vitreous enamelled open burner spill covers
- Cast iron simmer plates (optional extra)
- 12mm thick mild steel griddle plate
- 2.5mm 304 stainless steel griddle splash guards
- Vitreous enamelled spill trays

Griddle sections are standard on RH side. Available on LH side to order or by conversion.

Bench mount (supplied as –B model)

- Four 63mm dia. heavy-duty 1.2mm 304 stainless steel bench legs with adjustable feet
- Adjustable height 80mm – 105mm

Cabinet base (supplied as –CB model)

- Fully modular for match suite finish
- Double skin 0.9mm 304 stainless steel interior and exterior
- Optional GN 1/1 4 position racking kit
- 63mm dia. heavy-duty 1.2mm 304 stainless steel legs with adjustable feet

Leg stand (supplied as –LS model)

- Fully modular for matched suite finish
- Framed top for connection to Cooktop
- 63mm dia. heavy-duty 1.2mm 304 stainless steel legs with adjustable feet
- Fully modular framed stand shelf with 0.9mm 304 stainless steel finish
- Suitable for rear or through shelf gas connection to Cooktop
- Quick assembly design (no tools required)

Controls

- Variable high to low controls to open burners
- Open burners flame failure standard with pilot burners optional
- Variable high to low controls to griddles
- Griddles standard with pilot, flame failure and piezo ignition
- Large easy use control knob - heat resistant reinforced
- Easy view control settings on knob

Cleaning and Servicing

- All models with easy clean stainless steel external finish
- Lift off burners heads and vitreous enamelled burner spill covers
- Vitreous enamelled spill trays under open burner and griddle sections
- Access to all parts from front of unit

Technical data sheet for

GAS COOKTOPS 600mm

Waldorf 800 SERIES

Specifications

Burners
Open Burners 28MJ/hr dual flame ring with simmer rate
Griddle Burners 20MJ/hr

Gas power

RN8400G	112 MJ/hr, 31kW
RN8403G	76 MJ/hr, 21kW
RN8406G	40 MJ/hr, 11kW

Griddle Plate
300mm Griddle cooking surface
292mm x 475mm, 1387cm2
600mm Griddle cooking surface
592mm x 475mm, 2812cm2

Gas connection
R ¾ (BSP) male
130mm from RH side, 32mm from rear, and 655mm from floor
All units supplied with Natural and LP gas regulator

Dimensions

Bench models
Width 600mm
Depth 805mm
Height 315mm
Incl. splashback 530mm
Incl. low back 370mm

All models (excluding Bench model)
Width 600mm
Depth 805mm
Height 915mm
Incl. splashback 1130mm
Incl. low back 970mm

Nett weight (all models)

80kg

Packing data

Bench and Leg Stand models
0.37m3, 116kg
Width 645mm
Depth 870mm
Height 665mm

Cabinet Base models
0.70m3, 116kg
Width 645mm
Depth 870mm
Height 1255mm

Gas types

Available in Natural gas and LP gas
Please specify when ordering
Units supplied complete with gas type conversion kits
Other gas types on request

Options at extra cost

Simmer plates (replaces Potstand)
Ribbed griddle plates
Joining caps
Castors
Plinth mounting

RN8400G-B

Bench Model

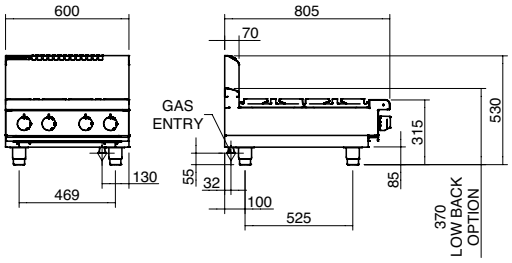

RN8400G-CB

Cabinet Base

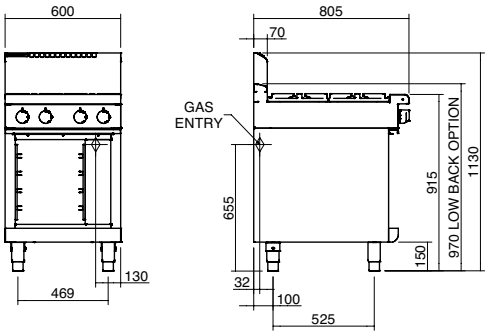

RN8400G-LS

Leg Stand

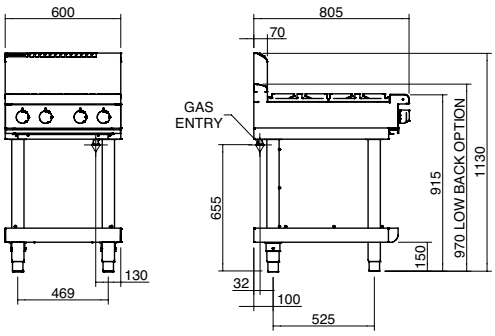

RN8400G

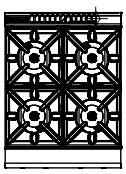

RN8403G

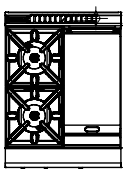

RN8406G

MOFFAT

moffat.com.au
moffat.co.nz

Australia
moffat.com.au

Moffat Pty Limited

Victoria/Tasmania
740 Springvale Road
Mulgrave, Victoria 3170
Telephone +613-9518 3888
Facsimile +613-9518 3833
vsales@moffat.com.au

New South Wales
Telephone +612-8833 4111
nswsales@moffat.com.au

South Australia
Telephone +613-9518 3888
vsales@moffat.com.au

Queensland
Telephone +617-3630 8600
qldsales@moffat.com.au

Western Australia
Telephone +618-9413 2400
wasales@moffat.com.au

New Zealand
moffat.co.nz

Moffat Limited

Rolleston
45 Illinois Drive
Izone Business Hub
Rolleston 7675
Telephone +64 3-983 6600
Facsimile +64 3-983 6660
sales@moffat.co.nz

Auckland
Telephone +64 9-574 3150
sales@moffat.co.nz

24:7 Service Support

ISO9001 Quality Management Standard

Cert. No. 6902

In line with policy to continually develop and improve its products, Moffat Limited reserves the right to change specifications and design without notice.

© Copyright Moffat Ltd

AN.W8.08/19

an Ali Group Company

Ali GROUP
The Spirit of Excellence