PRODUCT DOCUMENT PACK

Prepared and distributed by KW Commercial Kitchen

PRODUCT

Waldorf RN8600G-LS 900mm Gas Cooktop Leg Stand

Model / SKU: RN8600G-LS

KW COMMERCIAL KITCHEN

7/72 Canterbury Road, Bankstown NSW 2200

Phone 1300 001 366

Email sales@kwcommercial.com.au

Web www.kwcommercial.com.au

Scan for the current KW product page

DOCUMENT NOTICE

The supplier document begins on the next page. KW contact branding is added in a separate footer area and does not replace the supplier's instructions, specifications or warranty terms.

Official supplier source: https://moffat.global.ssl.fastly.net/sites/default/files/products/manual/Waldorf_RNX8200_8400_8600_8800G_228605-

Waldorf®
800 SERIES

Installation and Operation Manual

Gas Cooktops

Series

RN8200G	RNL8200G	RNB8200G	RNLB8200G
RN8400G	RNL8400G	RNB8400G	RNLB8400G
RN8600G	RNL8600G	RNB8600G	RNLB8600G
RN8800G	RNL8800G	RNB8800G	RNLB8800G

Date Purchased

Serial Number

Dealer

Service Provider

For use in GB, IE & DK

228605-29

KW COMMERCIAL KITCHEN
Distributed by KW Commercial Kitchen | 1300 001 366
www.kwcommercial.com.au | sales@kwcommercial.com.au

MANUFACTURED BY

Moffat Limited
Rolleston 7675
New Zealand

INTERNATIONAL CONTACTS

AUSTRALIA

Moffat Pty Limited

Web:	www.moffat.com.au
E.Mail:	vsales@moffat.com.au
Main Office:	(tel) +61 (03) 9518 3888
	(fax) +61 (03) 9518 3838
Service:	(tel): 1800 622 216
Spares:	(tel): 1800 337 963
Customer Service:	(tel): 1800 335 315
	(fax): 1800 350 281

CANADA

Serve Canada

Web:	www.servecanada.com
E.Mail:	info@servecanada.com
Sales:	(tel): 800 551 8795 (Toll Free)
Service:	(tel): 800 263 1455 (Toll Free)

NEW ZEALAND

Moffat Limited

Web:	www.moffat.co.nz
E.Mail:	sales@moffat.co.nz
Main Office:	(tel): 0800 663328

UNITED KINGDOM

Blue Seal

Web:	www.blue-seal.co.uk
E.Mail:	sales@blue-seal.co.uk
Sales:	(tel): +44 121 327 5575
	(fax): +44 121 327 9711
Spares:	(tel): +44 121 322 6640
	(fax): +44 121 327 9201
Service:	(tel): +44 121 322 6644
	(fax): +44 121 327 6257

UNITED STATES

Moffat

Web:	www.moffat.com
Sales:	(tel): 1-800 551 8795 (Toll Free)
	(tel): 336 661 1556
	(fax): 336 661 9546
Service:	(tel): 866 673 7937 (Toll Free)

REST OF WORLD

Moffat Limited

Web:	www.moffat.co.nz
E.Mail:	export@moffat.co.nz

The reproduction or copying of any part of this manual by any means whatsoever is strictly forbidden unless authorized previously in writing by the manufacturer.

In line with policy to continually develop and improve its products, Moffat Ltd. reserves the right to change the specifications and design without prior notice.

© Copyright Moffat Ltd. May 2017.

Waldorf Gas Cooktops

RN(L)(B)**8200G Gas Cooktop 300mm wide.**
RN(L)(B)**8400G Gas Cooktop 600mm wide.**
RN(L)(B)**8600G Gas Cooktop 900mm wide.**
RN(L)(B)**8800G Gas Cooktop 1200mm wide.**

Introduction 2

Specification 3
Model Numbers Covered in this Specification
General
Gas Supply Requirements
Gas Connection

Dimensions 6

Installation 11
Installation Requirements
Unpacking
Location
Clearances
Assembly
Fitting Adjustable Feet / Rear Rollers to Leg Stand Units
Fitting Adjustable Feet / Rear Rollers to Cabinet and Refrigeration Bases
Gas Connection
Commissioning

Operation 17
Operation Guide
Description of Controls
Open Burners ('F' - Flame Failure Option)
Open Burners ('PF' - Pilot and Flame Failure Option)
Griddle

Cleaning and Maintenance 20
Before Commencing Cleaning
Open Burner Cleaning
Griddle Plate Cleaning
Stainless Steel Surfaces

Fault Finding 22

Gas Conversion and Specifications 23
Conversion Procedure
Gas Specifications

Replacement Parts 28

Introduction

We are confident that you will be delighted with your WALDORF GAS COOKTOP, and it will become a most valued appliance in your commercial kitchen.
To ensure you receive the utmost benefit from your new Waldorf Gas Cooktops, there are two important things you can do.

Firstly:

Please read the instruction book carefully and follow directions given. The time taken will be well spent.

Secondly:

If you are unsure of any aspect of the installation, instructions or performance of your appliance, contact your WALDORF dealer promptly. In many cases a phone call could answer your question.

CE Only:

These instructions are only valid if the country code appears on the appliance. If the code does not appear on the appliance, refer to the supplier of this appliance to obtain the technical instructions for adapting the appliance to the conditions for use in that country.

Warning

IMPROPER INSTALLATION, ADJUSTMENT, ALTERATION, SERVICE OR MAINTENANCE CAN CAUSE PROPERTY DAMAGE, INJURY OR DEATH. READ THE INSTALLATION, OPERATING AND MAINTENANCE INSTRUCTIONS THOROUGHLY BEFORE INSTALLING OR SERVICING THIS APPLIANCE.

Warning

INSTRUCTIONS TO BE FOLLOWED IN THE EVENT THE USER SMELLS GAS ARE TO BE POSTED IN A PROMINENT LOCATION. THIS INFORMATION SHALL BE OBTAINED BY CONSULTING THE LOCAL GAS SUPPLIER.

Warning

GREAT CARE MUST BE TAKEN BY THE OPERATOR TO USE THE EQUIPMENT SAFELY TO GUARD IT AGAINST RISK OF FIRE.

- **THE APPLIANCE MUST NOT BE LEFT ON UNATTENDED.**
- **IT IS RECOMMENDED THAT A REGULAR INSPECTION IS MADE BY A COMPETENT SERVICE PERSON TO ENSURE CORRECT AND SAFE OPERATION OF YOUR APPLIANCE IS MAINTAINED.**
- **DO NOT STORE OR USE GASOLINE OR OTHER FLAMMABLE VAPOURS OR LIQUIDS IN THE VICINITY OF THIS OR ANY OTHER APPLIANCE.**
- **DO NOT SPRAY AEROSOLS IN THE VICINITY OF THIS APPLIANCE WHILE IT IS IN OPERATION.**

Caution

- **This appliance is for professional use and is only to be used by qualified persons.**
- **Only authorised service persons are to carry out installation, servicing or gas conversion operations.**
- **Components having adjustments protected (e.g. paint sealed) by the manufacturer should not be adjusted by the user / operator.**
- **DO NOT operate the appliance without the legs supplied fitted.**

KW COMMERCIAL KITCHEN
Distributed by KW Commercial Kitchen | 1300 001 366
www.kwcommercial.com.au | sales@kwcommercial.com.au

Model Numbers Covered in this Specification

RN[1]**8200G**-[2]-[3]	**2 Open Burners.**
RN[1]**8203G** -[3]	**300mm Griddle.**
RN[1]**8400G**-[2]-[3]	**4 Open Burners.**
RN[1]**8403G**-[2]-[3]	**2 Open Burners + 300mm Griddle.**
RN[1]**8406G** -[3]	**600mm Griddle.**
RN[1]**8600G**-[2]-[3]	**6 Open Burners.**
RN[1]**8603G**-[2]-[3]	**4 Open Burners + 300mm Griddle.**
RN[1]**8606G**-[2]-[3]	**2 Open Burners + 600mm Griddle.**
RN[1]**8609G** -[3]	**900mm Griddle.**
RN[1]**8800G**-[2]-[3]	**8 Open Burners.**
RN[1]**8803G**-[2]-[3]	**6 Open Burners + 300mm Griddle.**
RN[1]**8806G**-[2]-[3]	**4 Open Burners + 600mm Griddle.**
RN[1]**8809G**-[2]-[3]	**2 Open Burners + 900mm Griddle.**

NOTE:

[1]: - Model Options;

- \- Standard Models.
- L - Low Back Models.
- B - Bold Front.
- LB - Low Back and Bold Front.

[2] - Open Burner Options;

- F - With Flame Failure Protection.
- PF - With Pilot and Flame Failure Protection.

[3] - Base Stand Options;

- B - Bench Mount.
- CB - Cabinet Base (excluding RN8200G Series).
- LS - Leg Stand (excluding RN8200G Series).
- RB - Refrigerated Base (RN8600G and RN8800G Series only).

General

A heavy duty, high efficiency Cooktop for modular kitchens. It has a high option Cooktop / Griddle arrangement and is available either on industrial adjustable feet or on robust rollers. Griddle options with 4 models of base unit available (except RN8200G model). Fitted with either 'Individual Flame Failure' (F) or 'Pilot and Flame Failure' (PF) option for each open burner. Griddles are fitted with pilot, flame failure and piezo ignition as standard. Easy clean stainless steel external finish.

KW COMMERCIAL KITCHEN
Distributed by KW Commercial Kitchen | 1300 001 366
www.kwcommercial.com.au | sales@kwcommercial.com.au

Gas Supply Requirements

- Australia

	Natural Gas	LP Gas (Propane)
Input Rate (N.H.G.C.) - each Open Burner - each 300mm Griddle Section	28 MJ/hr 21 MJ/hr	28 MJ/hr 21 MJ/hr
Supply Pressure	1.13 - 3.40 kPa	2.75 - 4.50 kPa
Burner Operating Pressure (*)	0.95 kPa	2.6 kPa
Gas Connection	See 'Gas Connection' information overleaf.	

- New Zealand

	Natural Gas	LP Gas
Input Rate (N.H.G.C.) - each Open Burner - each 300mm Griddle Section	28 MJ/hr 21 MJ/hr	28 MJ/hr 21 MJ/hr
Supply Pressure	1.13 - 3.40 kPa	2.75 - 4.50 kPa
Burner Operating Pressure (*)	0.95 kPa	2.6 kPa
Gas Connection	See 'Gas Connection' information overleaf.	

- United Kingdom

Category: **II_{2H3P} (20, 37).**
Flue Type: **A_1.**

		Natural Gas (G20)		Propane (G31)	
		Open Burner (each)	**Griddle** (each 300mm section)	**Open Burner** (each)	**Griddle** (each 300mm section)
Heat Input (nett)	**Nominal**	6.5 kW	5.5 kW	6.5 kW	5.5 kW
	Reduced	1.75 kW	1.85 kW	1.75 kW	1.95 kW
	Pilot	200W	170W	200W	150W
Gas Rate (nett)	**Nominal**	0.69 m^3/hr	0.58 m^3/hr	0.51 kg/hr	0.43 kg/hr
	Reduced	0.19 m^3/hr	0.20 m^3/hr	0.14 kg/hr	0.15 kg/hr
	Pilot	0.02 m^3/hr	0.02 m^3/hr	0.02 kg/hr	0.01 kg/hr
Supply Pressure		20 mbar		37 mbar	
Burner Operating Pressure (*)		9.5 mbar		26 mbar	
Gas Connection		See 'Gas Connection' information overleaf.			

*** - Measure burner operating pressure at manifold test point with <u>two burners</u> operating at full setting. Operating pressure is ex-factory set, through appliance regulator and is not to be adjusted, apart from when converting between gases, if required. (Refer to 'Gas Conversion' section for details).**

KW COMMERCIAL KITCHEN
Distributed by KW Commercial Kitchen | 1300 001 366
www.kwcommercial.com.au | sales@kwcommercial.com.au

- All Other Markets

	Natural Gas	Town Gas (**)
Input Rate (N.H.G.C.) - each Open Burner	28 MJ/hr	28 MJ/hr
- each 300mm Griddle Section	21 MJ/hr	21 MJ/hr
Supply Pressure	1.13 - 3.40 kPa	0.75 - 1.50 kPa
Burner Operating Pressure (*)	0.95 kPa	0.63 kPa
Gas Connection	See 'Gas Connection' information below.	

	LP Gas / Butane
Input Rate (N.H.G.C.) - each Open Burner	28 MJ/hr
- each 300mm Griddle Section	21 MJ/hr
Supply Pressure	2.75 - 4.50 kPa
Burner Operating Pressure (*)	2.6 kPa
Gas Connection	See 'Gas Connection' information below.

NOTE:

- **(*) Measure Burner operating pressure at manifold test point with two burners operating at 'High Flame' setting.**
- **NAT, LPG & Butane Only - Operating pressure is ex-factory set and is not to be adjusted, unless when converting between gases, if required.**
- **(**) TOWN GAS Only - Adjust burner operating pressure using adjustable gas regulator supplied.**
- **Refer to 'Gas Conversion and Specifications' section in this manual for further details.**

Gas Connection

Gas supply connection point is located at rear of appliance, approximately 130mm from right hand side, 32mm from rear and 655mm from floor (55mm for bench top – **B** models) and is reached from beneath appliance. (Refer to 'Dimensions' section). With exception of RN8200G-B and RN8203G -B models which are 100mm from right hand side, 32mm from rear and 70mm from floor.

Connection is ½" BSP male thread (for RN8200G and RN8203G models).
Connection is ¾" BSP male thread (for all other models).

KW COMMERCIAL KITCHEN
Distributed by KW Commercial Kitchen | 1300 001 366
www.kwcommercial.com.au | sales@kwcommercial.com.au

Bench Models

R = Rating Plate Location for this option.

RN(L)8200G-B

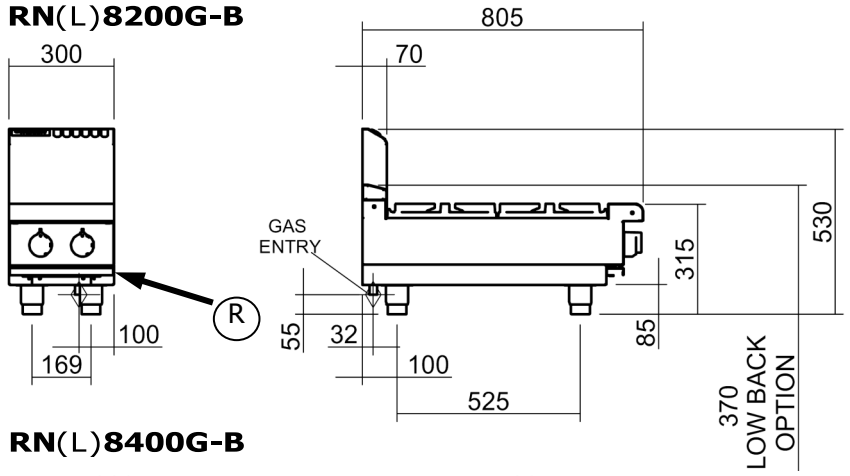

RN(L)8400G-B

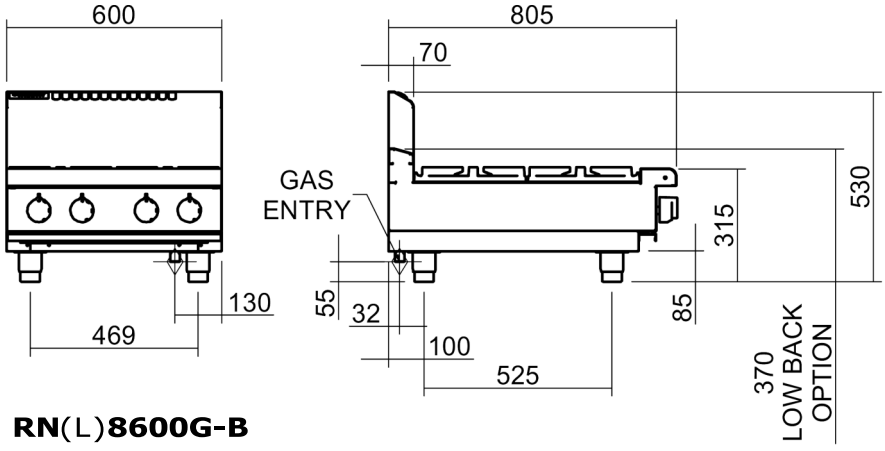

RN(L)8600G-B

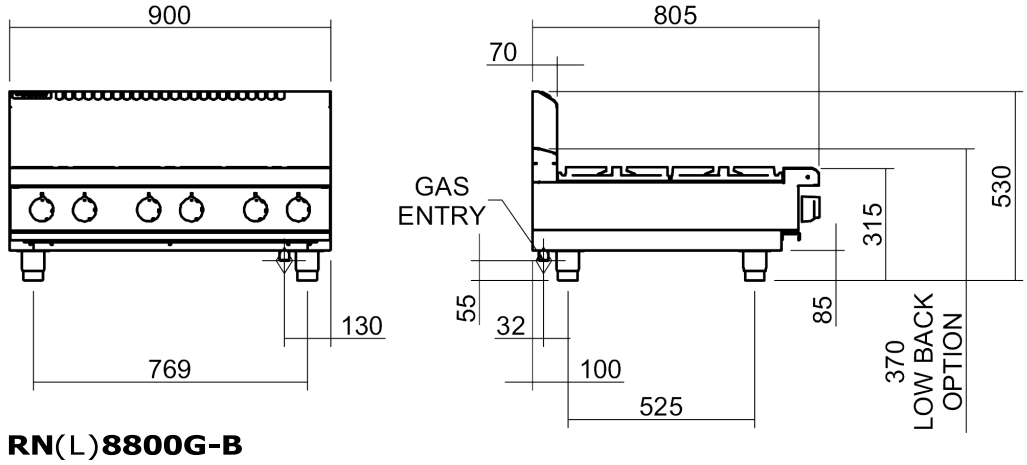

RN(L)8800G-B

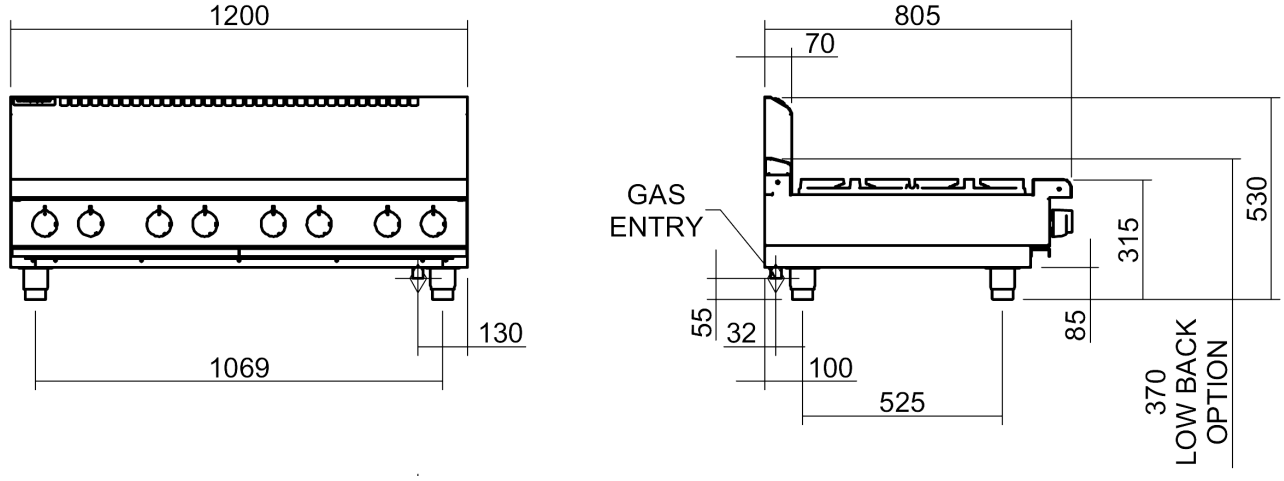

Refer to Page 9 for Cooktop options

KW COMMERCIAL KITCHEN
Distributed by KW Commercial Kitchen | 1300 001 366
www.kwcommercial.com.au | sales@kwcommercial.com.au

Cabinet Base Models

RN8200G Models - not available in Cabinet Base option.

RN(L)8400G-CB

R = Rating Plate Location for this option.

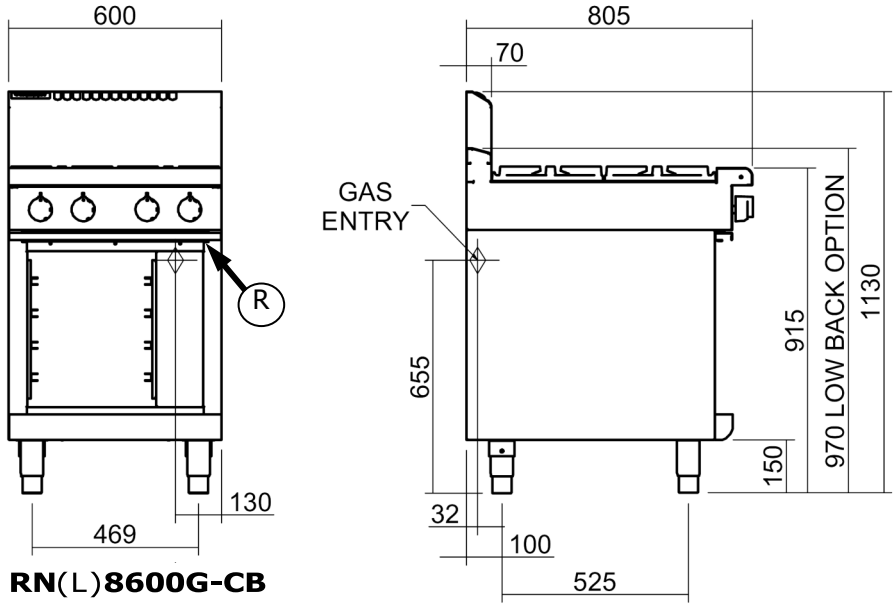

RN(L)8600G-CB

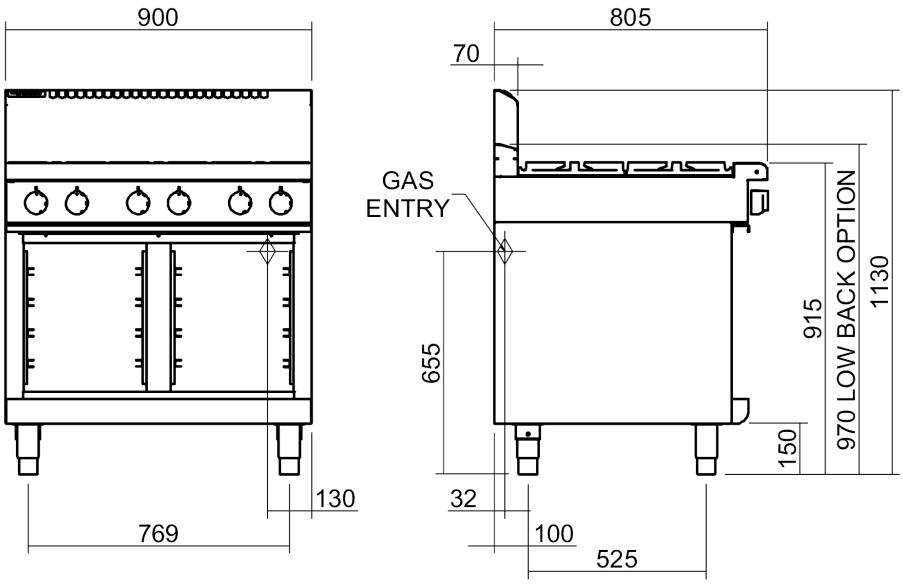

RN(L)8800G-CB

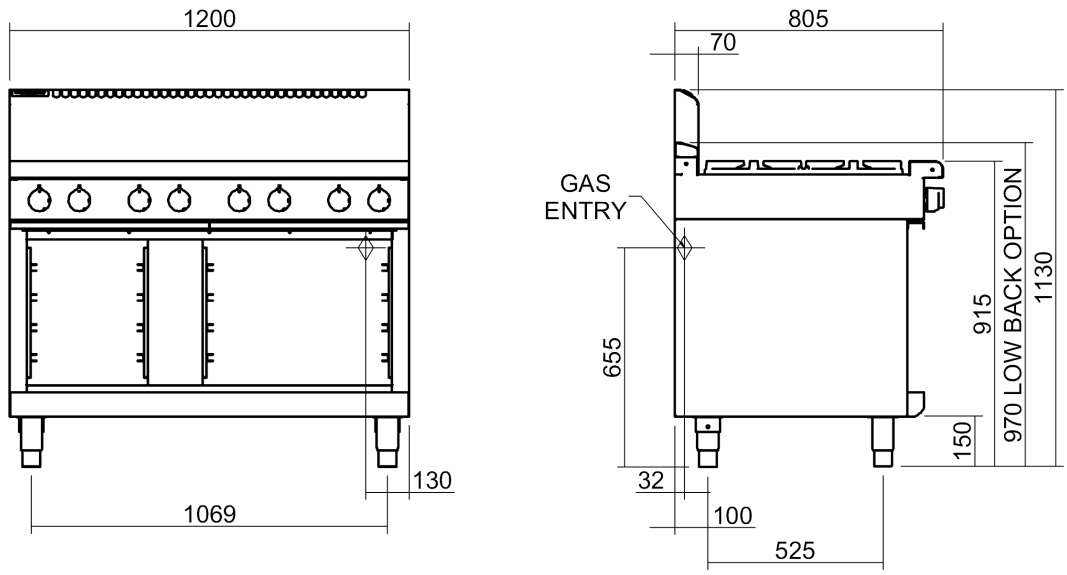

Refer to Page 9 for Cooktop options

KW COMMERCIAL KITCHEN
Distributed by KW Commercial Kitchen | 1300 001 366
www.kwcommercial.com.au | sales@kwcommercial.com.au

Leg Stand Models

RN8200G Models - not available in Leg Stand Base option.

RN(L)**8400G-**

(R) = Rating Plate Location for this option.

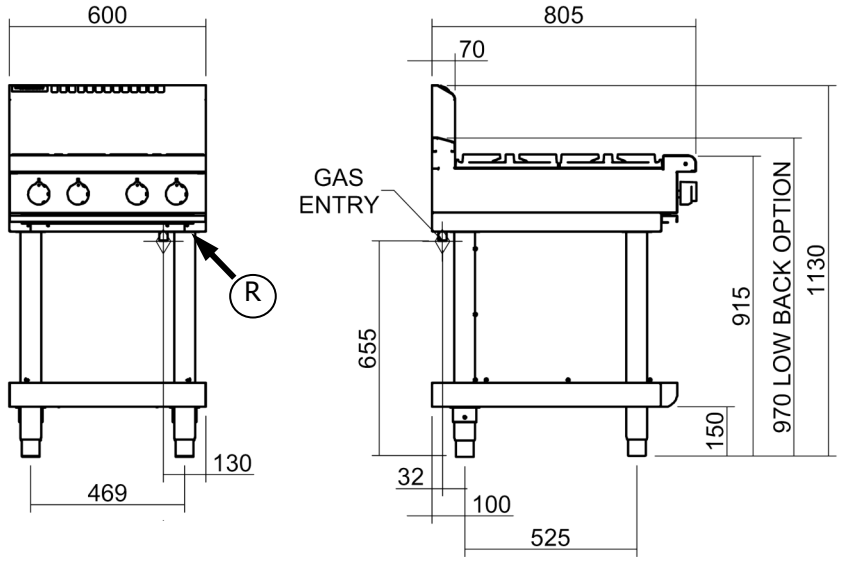

RN(L)**8600G-LS**

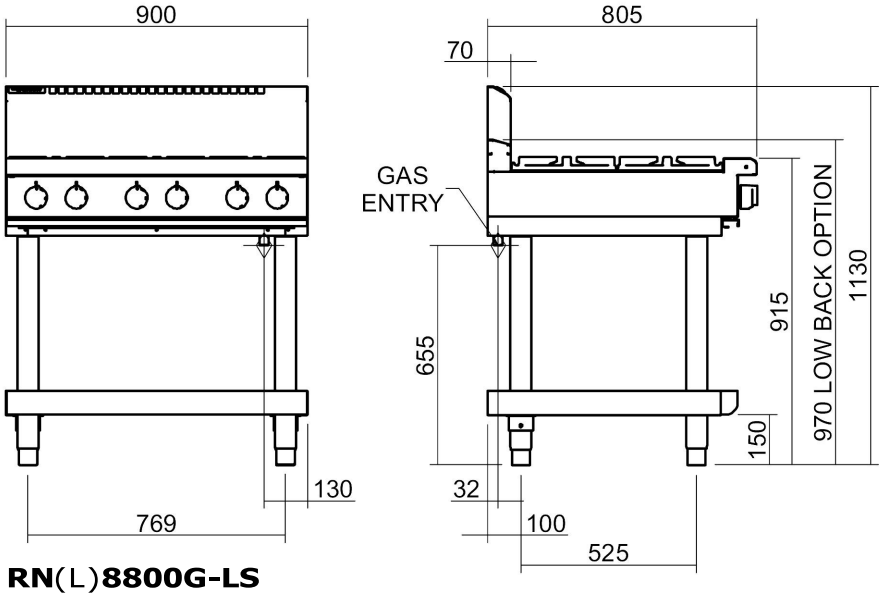

RN(L)**8800G-LS**

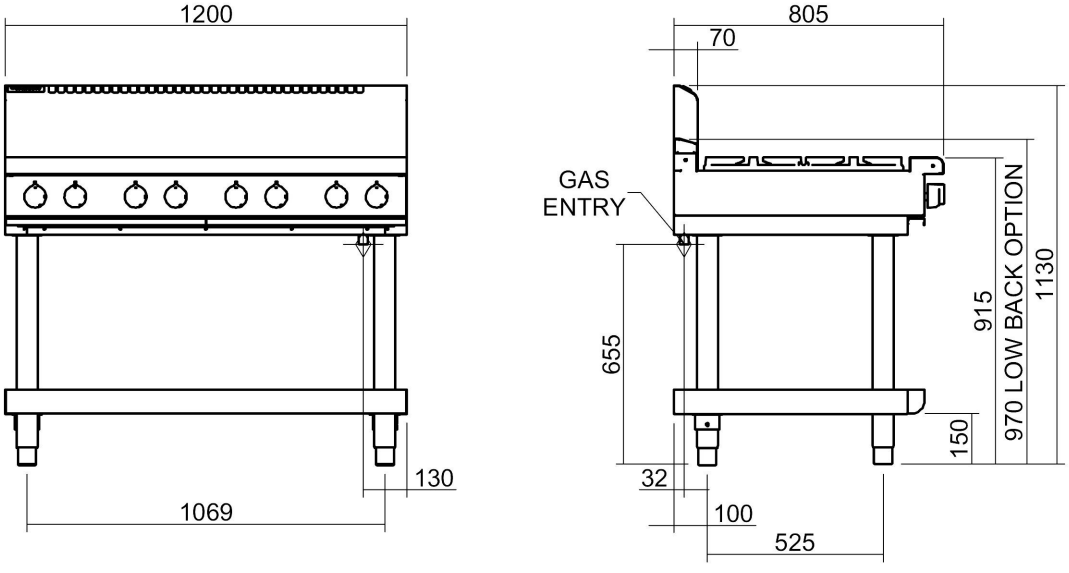

Refer to Page 9 for Cooktop options

KW COMMERCIAL KITCHEN
Distributed by KW Commercial Kitchen | 1300 001 366
www.kwcommercial.com.au | sales@kwcommercial.com.au

Refrigerated Base Models

RN8200G and RN8400G Models - not available in Refrigerated Base option.

Ⓡ = Rating Plate Location for this option.

RN(L)8600G-RB

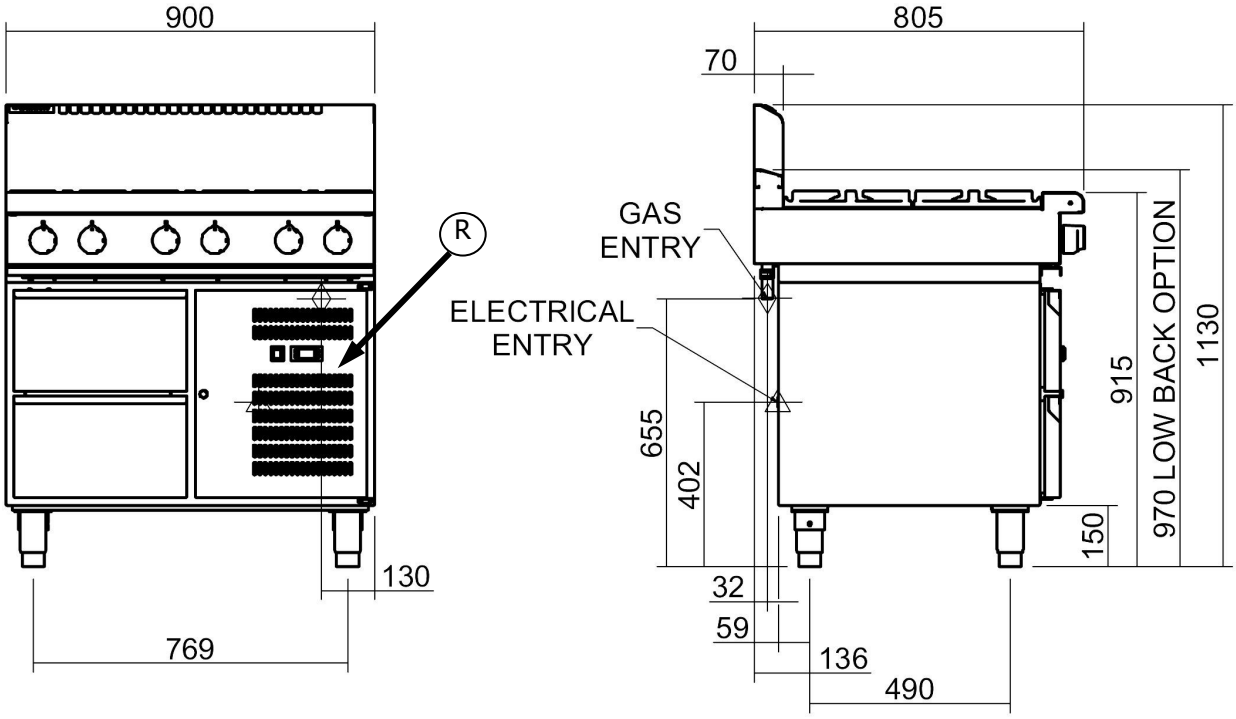

RN(L)8800G-RB

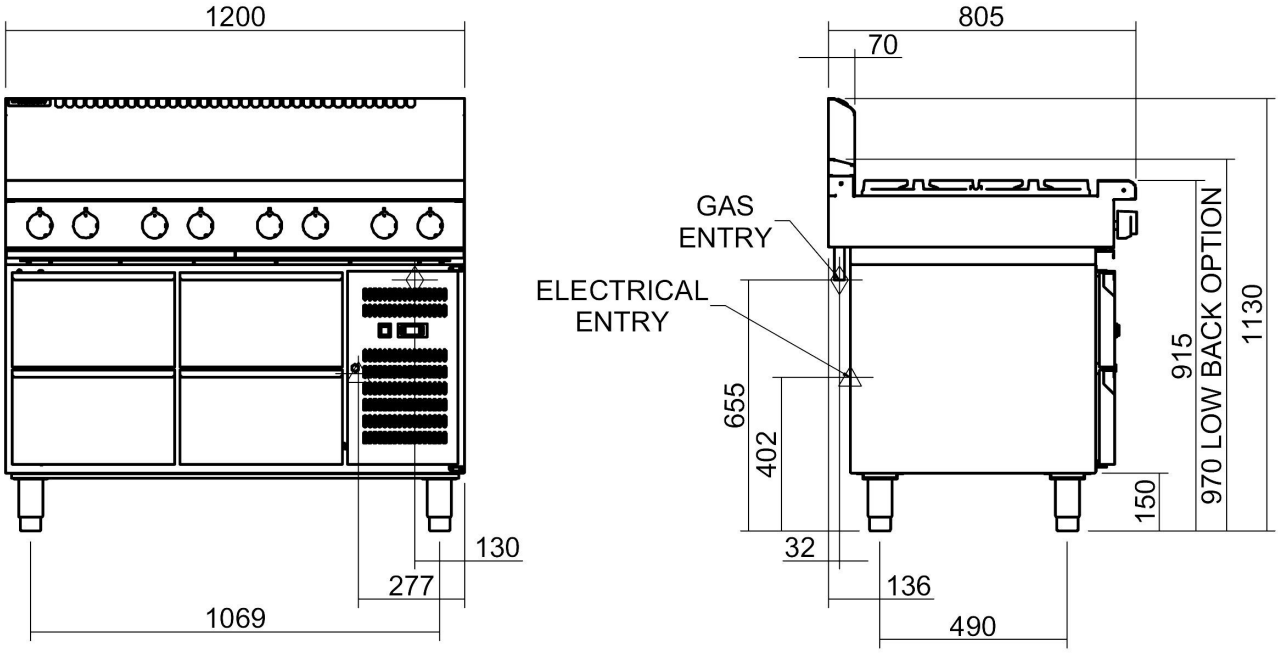

Refer to Page 9 for Cooktop options

KW COMMERCIAL KITCHEN
Distributed by KW Commercial Kitchen | 1300 001 366
www.kwcommercial.com.au | sales@kwcommercial.com.au

Cooktop Options

RN(L)8800G

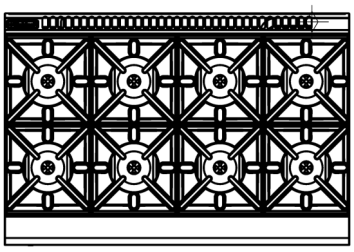

RN(L)8600G

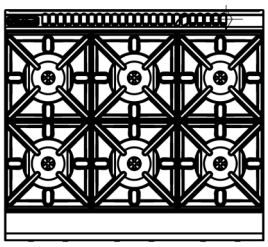

RN(L)8400G

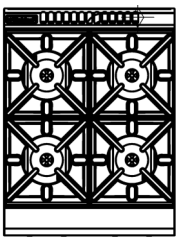

RN(L)8200G

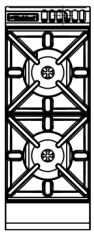

RN(L)8803G

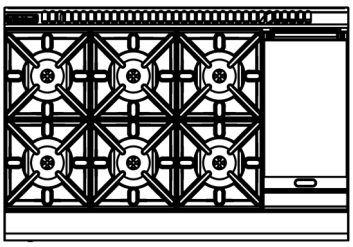

RN(L)8603G

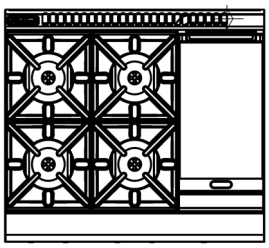

RN(L)8403G

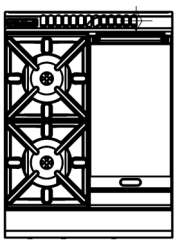

RN(L)8203G

RN(L)8806G

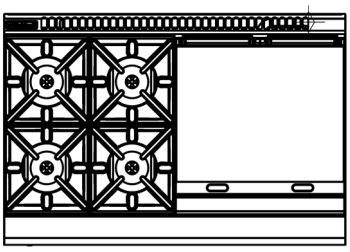

RN(L)8606G

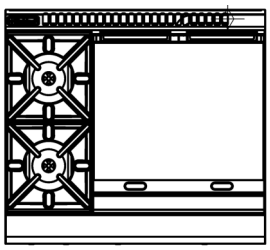

RN(L)8406G

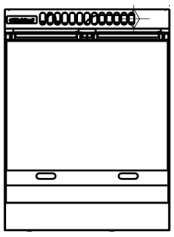

RN(L)8809G

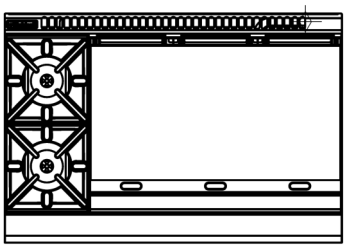

RN(L)8609G

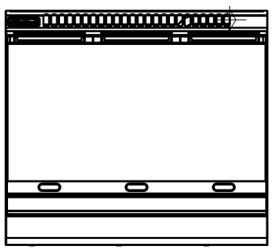

NOTE:

- **RN8200G models are only available in Bench Model (-B) option.**
- **RN8400G models are available in Bench Model (-B), Cabinet Base (-CB), or Leg Stand (-LS) model options.**
- **RN8600G and RN8800G are available in Bench Model (-B), Cabinet Base (-CB), Leg Stand (-LS), or Refrigeration Base (-RB) model options.**

For Refrigeration Cabinet Specifications and Dimensions refer to Refrigeration Cabinet Installation and Operation Manual supplied with appliance.

KW COMMERCIAL KITCHEN
Distributed by KW Commercial Kitchen | 1300 001 366
www.kwcommercial.com.au | sales@kwcommercial.com.au

Installation Requirements

NOTE:

- **It is most important that this Cooktop is installed correctly and that operation is correct before use. Installation shall comply with local gas, health and safety requirements.**
- **This appliance shall be installed with sufficient ventilation to prevent the occurrence of unacceptable concentrations of health harmful substances in the room, the appliance is installed in.**

Waldorf Cooktops are designed to provide years of satisfactory service, and correct installation is essential to achieve the best performance, efficiency and trouble-free operation.

This appliance must be installed in accordance with National installation codes and in addition, in accordance with relevant National / Local codes covering gas and fire safety.

Australia / New Zealand:	- AS/NZS5601 - Gas Installations.
United Kingdom:	- Gas Safety (Installation & Use) Regulations 1998.
	- BS6173 - Installation of Catering Appliances.
	- BS5440 1 & 2 - Installation Flueing & Ventilation.
Ireland:	- IS 820 - Non - Domestic Gas Installations.

Installations must be carried out by qualified service persons only. Failure to install equipment to relevant codes and manufacturer's specifications shown in this section will void the warranty.

Components having adjustments protected (e.g. paint sealed) by the manufacturer are only to be adjusted by an authorised service agent. They are not to be adjusted by the installation person.

Unpacking

- Remove all packaging and transit protection from appliance including all protective plastic coating from exterior stainless steel panels.
- Check equipment and parts for damage. Report any damage immediately to the carrier and distributor.
- Report any deficiencies to distributor who supplied appliance.
- Check available gas supply is correct to that shown on Rating Plate attached to underside of R/ H side, front Cooktop lower trim, for Bench, Cabinet Base and Leg Stand Models. For Refrigerated Base Models, rating plate is located inside right hand front panel and can be viewed through upper grille.

Location

1. Installation must allow for a sufficient flow of fresh air for the combustion air supply.
2. Installation must include adequate ventilation means, to prevent dangerous build up of combustion products.

Combustion Air Requirements:				
	RN8200G	**RN8400G**	**RN8600G**	**RN8800G**
Natural Gas (G20)	$12m^3/hr$	$24m^3/hr$	$36m^3/hr$	$48m^3/hr$
LPG / Propane (G31)	$13m^3/hr$	$25m^3/hr$	$38m^3/hr$	$50m^3/hr$

3. Never directly connect a ventilation system to appliance flue outlet.
4. Position appliance in its approximate working position.
5. All air for burner combustion is supplied from underneath appliance. Legs must always be fitted and no obstructions placed on underside or around base of appliance, as obstructions will cause incorrect operation and / or failure of appliance.

NOTE: Do not obstruct or block appliance flue. Never directly connect a ventilation system to appliance flue outlet.

KW COMMERCIAL KITCHEN
Distributed by KW Commercial Kitchen | 1300 001 366
www.kwcommercial.com.au | sales@kwcommercial.com.au

Clearances

NOTE: Only non-combustible materials can be used in close proximity to this appliance.

	Combustible Surface	Non Combustible Surface
Left / Right Hand Side	250mm (*)	0mm
Rear; - Standard Models	50mm	0mm
- Low Back Models	100mm	0mm

* Side clearances can be 50mm when adjacent surface is at least 100mm below cooking surface.

Assembly

NOTE:

- **All Models are delivered completely assembled. No further assembly is required, with exception of all Leg Stand Models (RN8400G-LS, RN8600G-LS RN8800G-LS), these will require assembly. Refer to 'Leg Stand Models Only' information below for assembly instructions.**
- **The appliance rear leg housings can be fitted with:-**

  Adjustable feet to assist with levelling of appliance on uneven floors. This should be carried out on completion of gas connection. Refer to 'Gas Connection Section'.

  Rear rollers to enable appliance to be easily moved for positioning and cleaning purposes.

Optional Accessories (Refer to Replacement Parts List)

- Plinth Kit. For installation details, refer to instructions supplied with each kit.

Bench Models

1. Check that all feet are fitted.
2. Adjust the four feet to make Cooktop steady and level.

Fitting of Adjustable Feet / Rear Rollers to Leg Stand Units.

Warning

TO PREVENT EQUIPMENT DAMAGE AND RISK OF INJURY, REMOVE ALL LOOSE ITEMS FROM THE TOP OF THE COOKTOP PRIOR TO FITTING THE LEG STAND.

1. Remove all pot stands, pot stands supports, burner caps, burner bowls, griddle plates and other removable items.
2. Lower cooktop onto its rear face.
3. Attach four cooktop legs to leg mount points on underside of cooktop unit.
4. Secure each leg hand tight.
5. Align 4 round holes in corners of base tray with 4 cooktop legs already fitted. (Ensure base tray is orientated with sloping edge of base tray facing front of appliance).
6. Slot base tray onto 4 cooktop legs and push fully home.
7. Secure base tray to cooktop legs by screwing two front adjustable feet supplied, into base of front cooktop legs. Secure each adjustable foot, hand tight.
8. The two rear leg housings can be fitted with either adjustable legs or rollers. (See Figure 1).

KW COMMERCIAL KITCHEN
Distributed by KW Commercial Kitchen | 1300 001 366
www.kwcommercial.com.au | sales@kwcommercial.com.au

Rear Adjustable Feet, fitting:-

a. Secure rear of base tray to rear cooktop legs by screwing the two adjustable feet supplied, into base of rear cooktop legs.

b. Secure each adjustable foot, hand tight.

Rear Rollers, fitting:-

a. Fit rear leg securing bolts up through centre of rear leg housings to secure rear of base tray to rear cooktop legs and tighten up bolts using a 24mm socket.

b. Fit rear rollers to rear leg supports.

c. Secure rear rollers to rear leg supports using locating screw supplied.

d. Tighten screw using a 10mm spanner.

9. Lift cooktop back onto its legs / rollers and refit all griddle plates, open burners, trivets and pot stands.

10. Adjust adjustable feet to level appliance.

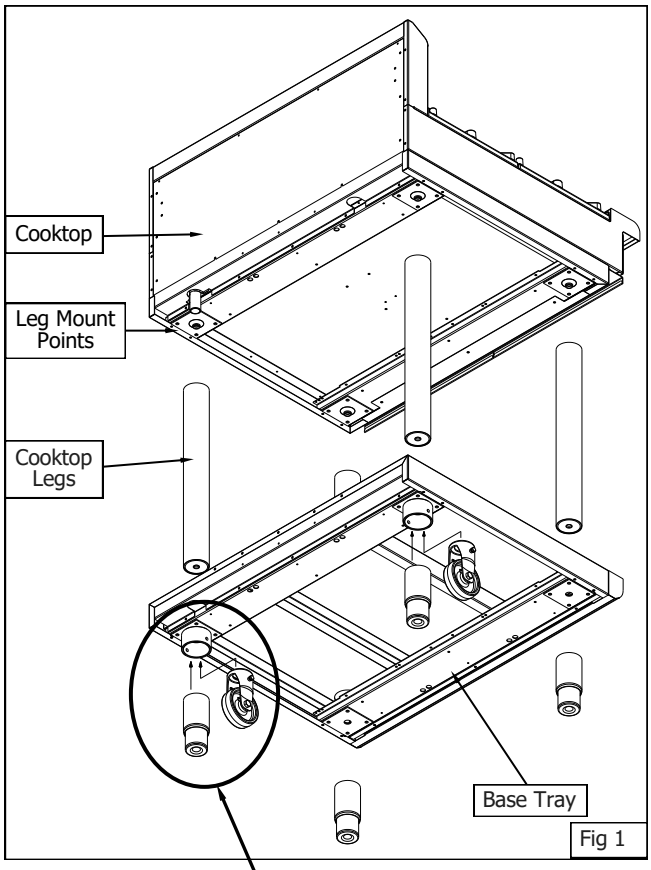

Fig 1

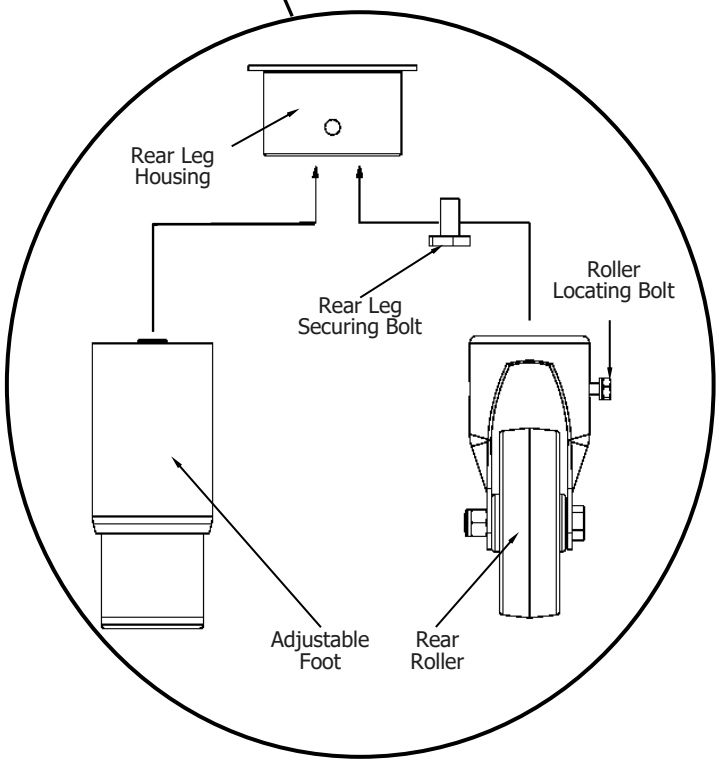

KW COMMERCIAL KITCHEN
Distributed by KW Commercial Kitchen | 1300 001 366
www.kwcommercial.com.au | sales@kwcommercial.com.au

Fitting Adjustable Feet / Rear Rollers to Cabinet and Refrigeration Bases.

Rear Adjustable Feet, fitting:-

1. Raise appliance from floor by approximately 75mm using suitable lifting equipment (i.e. Palletiser / Forklift) to allow rear rollers to be removed.
2. Unscrew and remove securing bolt that secures rear roller to rear leg housing.
3. Rear roller will drop freely from rear leg housing.
4. Remove second rear roller.
5. Screw rear adjustable feet into rear leg housings and tighten hand tight.
6. Lower appliance back to floor and adjust adjustable feet to level appliance.

Rear Rollers, fitting:-

1. Raise appliance from floor by approximately 75mm using suitable lifting equipment (i.e. Palletiser / Forklift) to allow rear adjustable feet to be removed.
2. Unscrew and remove both rear adjustable feet from rear leg housings.
3. Fit rear roller to rear leg housing and align screw hole in side of rear leg housing with threaded hole in rear roller.
4. Secure rear roller to leg support with bolt supplied and tighten bolt using a 10mm A/F spanner.
5. Fit second roller and tighten.
6. Lower appliance back to floor and adjust front adjustable feet to level appliance.

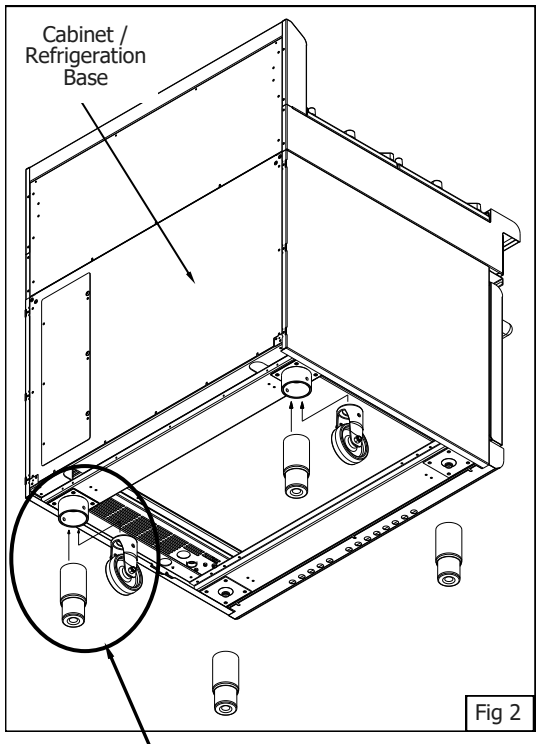

Fig 2

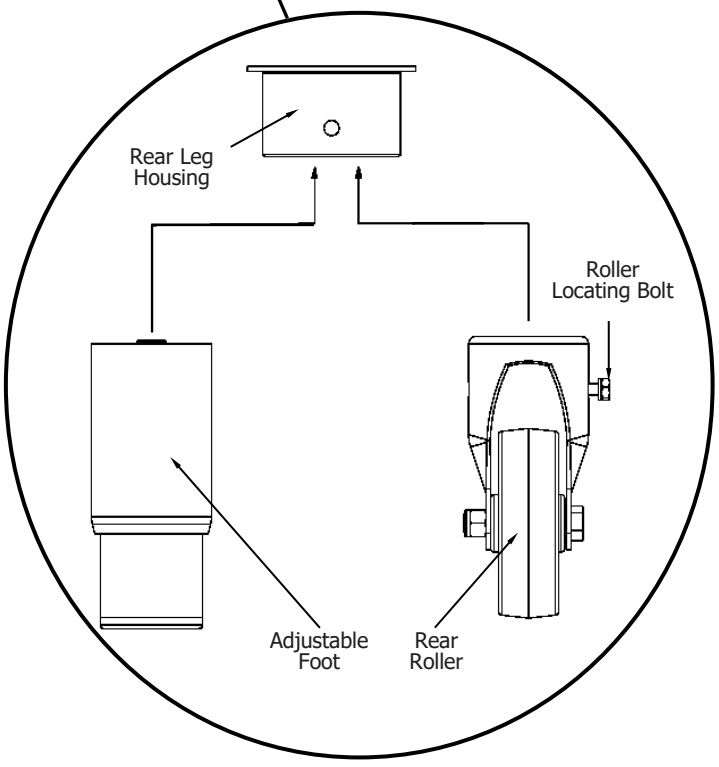

KW COMMERCIAL KITCHEN
Distributed by KW Commercial Kitchen | 1300 001 366
www.kwcommercial.com.au | sales@kwcommercial.com.au

Gas Connection

NOTE: ALL GAS FITTING MUST ONLY BE CARRIED OUT BY A QUALIFIED PERSON.

1. Waldorf Cooktops do not require electrical connection, as they function totally on the gas supply.
2. It is essential that gas supply is correct for Cooktop being installed and that adequate supply pressure and volume are available. The following checks should be made before installation:-

   a. **Gas Type** the appliance has been supplied for is shown on a coloured stickers located above gas entry point and on rating plate. Check that this is correct for gas supply the appliance is being installed for. Gas conversion procedure is detailed in this manual.

   b. **Supply Pressure** required for this appliance is shown in 'Specifications' section of this manual. Check gas supply to ensure that adequate supply pressure exists.

   c. **Input Rate** of this appliance is shown on Rating Plate and in 'Specifications' section of this manual. Input rate should be checked against available gas supply line capacity. **Particular note should be taken if appliance is being added to an existing installation.**

NOTE: It is important that adequately sized piping runs directly to connection joint on appliance with as few tees and elbows as possible, to give maximum supply volume.

3. Fit gas regulator supplied, into gas supply line as close to appliance as possible.

NOTE: Gas pressure regulator provided with this appliance is convertible between Natural Gas and LPG as per 'Gas Conversion Section' in this manual.
Ensure regulator is converted to correct gas type that appliance will operate on.
Regulator outlet pressure is fixed ex-factory for gas type that regulator is converted to and it is <u>NOT to be adjusted</u>.

<u>For RN8200G-B and RN8203G-B models</u>, regulator connection is ½" BSP female. Connection on the unit is ½" BSP male.
For RN8400G / RN8600G / RN8800G, regulator connections are ¾" BSP female. Connection on unit is ¾" BSP male.
(Refer to 'Specifications' section for gas supply location dimensions).

NOTE: A Manual Isolation Valve must be fitted to the individual appliance supply line.

4. Correctly locate appliance into its final operating position and using a spirit level, adjust legs so that appliance is level and at correct height.
5. Connect gas supply to appliance. A suitable joining compound which resists breakdown action of LPG must be used on every gas line connection, unless compression fittings are used.
6. Check all gas connections for leakages using soapy water or other gas detecting equipment.
7. Check gas operating pressure is as shown in 'Specifications' section.

Warning

DO NOT USE A NAKED FLAME TO CHECK FOR GAS LEAKAGES.

NOTE: Operating pressure is to be measured at manifold test point with <u>2 burners</u> operating at 'High Flame' setting.

8. Verify operating pressure remains correct.

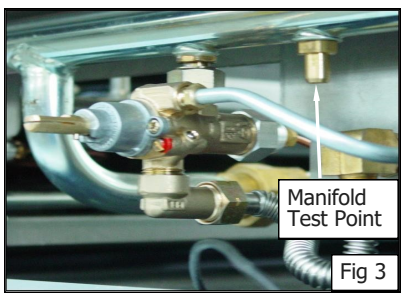

Fig 3

NOTE: This appliance is fitted with adjustable feet to enable appliance to be positioned securely and level. This should be carried out on completion of gas connection.

KW COMMERCIAL KITCHEN
Distributed by KW Commercial Kitchen | 1300 001 366
www.kwcommercial.com.au | sales@kwcommercial.com.au

Commissioning

1. Before leaving the new installation;
   a. Check the following functions in accordance with operating instructions specified in 'Operation' section of this manual.
      - Lighting the Griddle.
      - Light the Open Burners. (F - Flame Failure Option).
      - Light the Open Burners. (PF - Pilot and Flame Failure Option).
      - Check the Low Fire Burner Operation.

   b. Ensure that the operator has been instructed in the areas of correct lighting, operation, and shutdown procedure for the appliance.

2. This manual must be kept by owner for future reference and a record of ***Date of Purchase, Date of Installation*** and ***Serial Number of Appliance*** recorded and kept with this manual. (These details can be found on the Rating Plate;

   For Bench, Cabinet Base and Leg Stand Models, Rating Plate is attached to underside of right hand side, front Cooktop lower trim.

   For the Refrigerated Base Model, Rating Plate is located inside right hand front panel and can be viewed through upper grille. Refer to 'Gas Connection' section and 'Dimensions' section.

NOTE: If it is not possible to get the appliance to operate correctly, shut off gas supply and contact supplier of this appliance.

For Refrigeration Cabinet Installation details refer to Refrigeration Cabinet Installation in Operation Manual supplied with appliance.

KW COMMERCIAL KITCHEN
Distributed by KW Commercial Kitchen | 1300 001 366
www.kwcommercial.com.au | sales@kwcommercial.com.au

Operation Guide

Caution

- **This appliance is for professional use and is only to be used by qualified persons.**
- **Only authorised service persons are to carry out installation, servicing or gas conversion operations.**
- **Components having adjustments protected (e.g. paint sealed) by the manufacturer should not be adjusted by the user / operator.**

1. Waldorf appliances have been designed to provide simplicity of operation and 100% safety protection.
2. Improper operation is almost impossible, however bad operation practices can reduce the life of the appliance and produce a poor quality product. To use this appliance correctly please read the following sections carefully:-

   - Lighting the Open Burners (F Flame Failure Option).
   - Lighting the Open Burners (PF - Option).
   - Lighting the Griddle.

Description of Controls

NOTE: Only Cooktops fitted with 'Griddle Option' and 'Pilot & Flame Failure Option' will have a 'Pilot' position on Gas Control Knob. 'Griddle Options' will also have a piezo igniter fitted. Open burner control knobs with 'Flame Failure Option Only' will only have 'Off', 'Low Flame' and 'High Flame' positions.

Fig 4

Gas Control Knobs

Griddle & Open Burners with 'PF' Option fitted.

Burner Control

- OFF Position
- PILOT Burner
- HIGH Flame
- LOW Flame

Piezo Igniter (Griddles Only)

Open Burner 'F' Option Only

- OFF Position
- HIGH Flame
- LOW Flame
- Rear Burner
- Front Burner

(Indicators located above the Gas Control Knobs).

KW COMMERCIAL KITCHEN
Distributed by KW Commercial Kitchen | 1300 001 366
www.kwcommercial.com.au | sales@kwcommercial.com.au

Open Burners ('F' - Flame Failure Option)

Lighting the Open Burners

Flame Failure Protection is incorporated for each burner by way of a thermo-electric system which will shut off gas supply to that burner in the event that burner goes out, so that un-burnt gas is not expelled.

a. Select burner required, depress and turn the gas control knob anti-clockwise to 'HIGH' position.
b. Hold gas control knob depressed and manually light main burner.
c. Release gas control knob after approximately 10-20 seconds after lighting burner.
d. Burner should stay alight - if not, repeat Steps (a. to (c. above.
e. To adjust the temperature required, depress and rotate gas control knob between 'HIGH' and 'LOW' positions.

Turning 'OFF' the Open Burners

a. When main burner is not required, depress and turn gas control knob clockwise back to 'OFF' position. 'MAIN' burner will extinguish.

Open Burners ('PF' - Pilot and Flame Failure Option)

Lighting the Open Burners

These hobs are fitted with individual standing pilots for each open burner which allows main burners to be turned 'ON' - 'OFF' without having to manually re-light burner each time that it is turned 'ON', as burner will automatically light itself off the pilot burner.

Flame Failure Protection is incorporated for each burner by way of a thermo-electric system which will shut off gas supply to that burner in the event that burner goes out, so that un-burnt gas is not expelled.

a. Select burner required, depress and turn the gas control knob anti-clockwise to 'PILOT' position.
b. Hold gas control knob depressed and manually light pilot burner.
c. Release gas control knob after approximately 10-20 seconds after lighting pilot burner.
d. Pilot burner should stay alight - if not, repeat Steps (b. to (c. above.
e. To select 'Full Flame', depress and rotate gas control knob anti-clockwise to first stop 'HIGH' flame position.
f. To select 'Low Flame', depress and rotate gas control knob fully anti-clockwise to 'LOW' flame position.
g. To adjust the temperature required, depress and rotate gas control knob between 'HIGH' and 'LOW' positions.

Turning 'OFF' the Open Burners / Pilots

a. To turn 'OFF' main burner, but keep pilot burner alight, rotate gas control knob to 'PILOT' position. Main burner will extinguish and pilot will remain alight.
b. To turn 'OFF' the 'PILOT', depress and turn gas control knob clockwise back to 'OFF' position. 'PILOT' burner will extinguish.

KW COMMERCIAL KITCHEN
Distributed by KW Commercial Kitchen | 1300 001 366
www.kwcommercial.com.au | sales@kwcommercial.com.au

Griddle

Lighting the Griddle

a. Depress gas control knob and rotate anti-clockwise to 'PILOT' position.
b. Hold gas control knob depressed, press piezo ignition button to ignite pilot burner. Repeat Items 1 to 2 until pilot is lit.
c. Release gas control knob approximately 10-20 seconds after lighting pilot.
d. Pilot should now remain alight - if not, repeat Steps (b. to (c. above.
e. To select 'Full Flame', depress and rotate gas control knob anti-clockwise to 'HIGH' position.
f. To select 'Low Flame', depress and rotate gas control knob fully anti-clockwise to 'Low Flame' position.
g. When main burner is not required, depress and turn gas control knob clockwise back to 'OFF' position.

Turning 'OFF' the Griddle Burner / Pilot

a. To turn 'OFF' griddle, but keep pilot burner alight, rotate gas control knob to 'PILOT' position. Griddle burner will extinguish and pilot will remain alight.
b. To turn 'OFF' 'PILOT', depress and turn gas control knob clockwise back to 'OFF' position. 'PILOT' burner will extinguish.

IMPORTANT:

Should any abnormal operation like;
- **ignition problems,**
- **abnormal burner flame,**
- **burner control problems,**
- **partial or full loss of burner flame in normal operation, appliance requires IMMEDIATE service by a qualified service person and should not be used until a service is carried out.**

KW COMMERCIAL KITCHEN
Distributed by KW Commercial Kitchen | 1300 001 366
www.kwcommercial.com.au | sales@kwcommercial.com.au

Before Commencing Cleaning

Caution

Always turn off the gas / electrical supply before cleaning the appliance.

This appliance is not water proof. Do not use water jet spray to clean interior or exterior of this appliance.

NOTE:

- **Allow appliance to cool before commencing cleaning.**
- **DO NOT use abrasive or strong caustic detergents as they could corrode or damage the Cooktop.**
- **Ensure that any detergent or cleaning material has been completely removed after each cleaning.**

To keep your Cooktop clean and operating at peak efficiency, follow the procedures shown overleaf:-

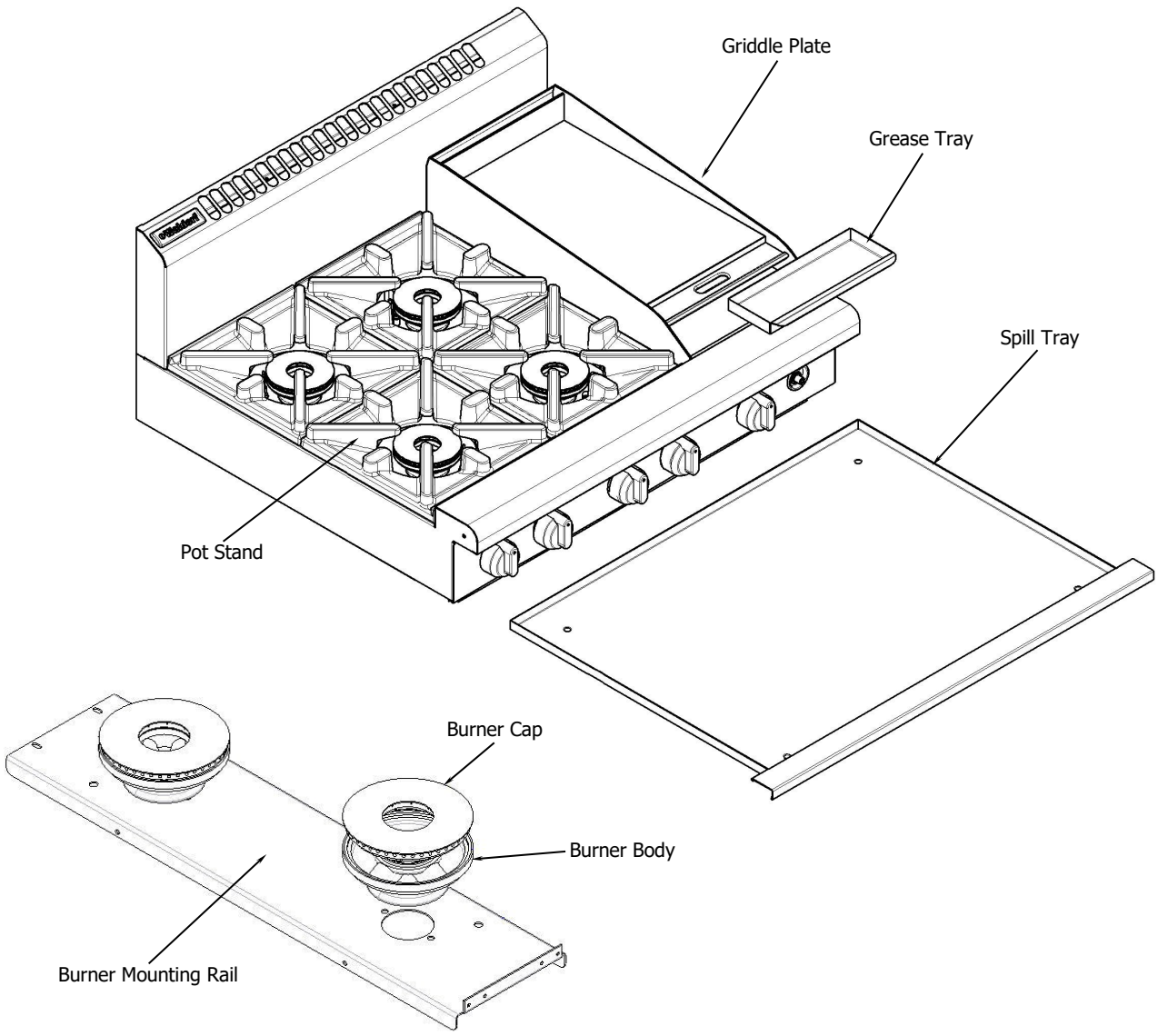

For Refrigeration Cabinet Cleaning refer to Refrigeration Cabinet Installation and Operation Manual supplied with appliance.

Distributed by KW Commercial Kitchen | 1300 001 366
www.kwcommercial.com.au | sales@kwcommercial.com.au

Open Burner Cleaning

1. Remove pot stands, burner caps, burner bowls and pot stand supports from top of cooktop. Wash with hot soapy water, using a soft bristled brush. Dry thoroughly with a dry cloth. Any baked-on deposits can be scraped off using a scraper tool.

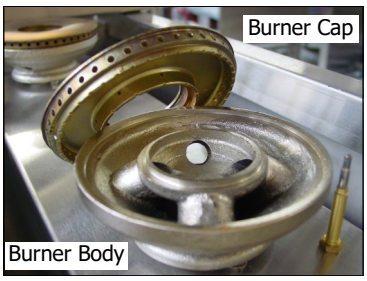

NOTE: Pot stands, burner bowls and pot stand supports can be washed in a dish washer. Do Not wash burner caps in dishwasher.

2. Burner mounting rails should not be removed. Clean in situ with hot soapy water.

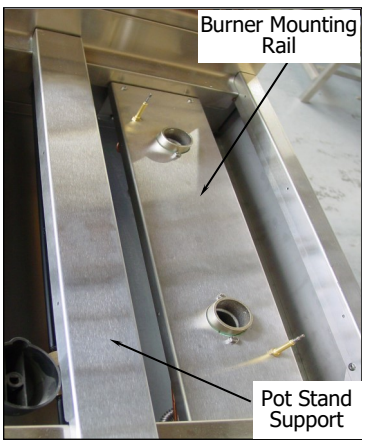

3. Clean burner venturi with a bottle brush and hot soapy water, as required.

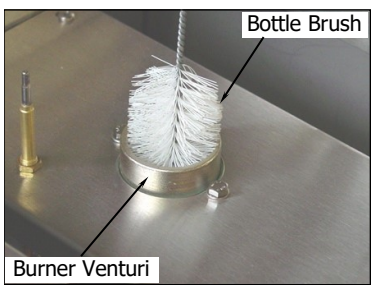

4. Empty spill tray and wash with warm soapy water.
5. Dry all components thoroughly and re-assemble.

Griddle Plate Cleaning

Warning

THE BLADES FITTED TO THE SCRAPER TOOL ARE EXTREMELY SHARP AND ARE TO BE USED WITH CARE.

It is recommended that a flat blade scraper is used to clean the griddle surface, these are not supplied with griddle but may be purchased separately. Refer to 'Replacement Parts List' at rear of this manual.

Caution

Always ensure that even pressure is applied over whole surface of scraper tool when using on flat surface of griddle, to prevent scoring of griddle surface.

NEVER bang sharp edge of scraper tool on flat surface of griddle as this will damage the griddle and invalidate the warranty.

1. Clean griddle plate surface thoroughly with a scraper tool and brush off any deposits with a soft bristled brush.
2. Stubborn or accumulated carbon deposits can be removed with a griddle stone or a scotch bright pad.
3. Wipe down griddle surface with a cloth and then clean with hot soapy water and a soft bristled brush. Dry thoroughly with a dry cloth.
4. Occasionally bleach griddle plate with vinegar when plate is cold.
5. Empty grease tray and wash with warm soapy water. Dry thoroughly with a dry cloth. Refit grease tray.
6. Briefly turn 'On' griddle until griddle plate is dry.
7. Spread a thin smear of cooking oil over griddle plate to form a protective film.

Stainless Steel Surfaces

1. Clean stainless steel surfaces with hot soapy water and a soft bristled brush.
2. Baked on deposits or discolouration, use a good quality stainless steel cleaner or stainless steel wool. Always rub in direction of grain.

KW COMMERCIAL KITCHEN
Distributed by KW Commercial Kitchen | 1300 001 366
www.kwcommercial.com.au | sales@kwcommercial.com.au

Fault Finding

This section provides an easy reference guide to the more common problems that may occur during operation of your equipment. The fault finding guide in this section is intended to help you correct, or at least accurately diagnose problems with your equipment.

Although this section covers the most common problems reported, you may encounter a problem not covered in this section. In such instances, please contact your local authorised service agent who will make every effort to help you identify and resolve the problem. Please note that the service agent will require the following information:-

- **Model Code and Serial Number of appliance. (both can be found on Rating Plate located on appliance.**

Fault	Possible Cause	Remedy
Pilot won't light.	No gas supply. Blocked pilot injector. (Griddle Option Only).	Ensure gas isolation valve is turned 'On', and that bottles are not empty. Call service provider.
Pilot goes out when gas control knob released. (Griddle and Open Burner (PF) options only).	Releasing knob before thermo-couple has heated. Pilot flame too small. - Gas pressure too low. - Partially blocked pilot injector. Thermocouple connection to gas control is loose or faulty. Thermocouple faulty. Electromagnet in rear of gas control unit is faulty.	Hold knob in for at least 20 seconds following ignition of pilot. Clean or replace pilot injector. Tighten thermocouple connection. Check thermo couple is producing between 20-30mV. Inspect and replace if not in good working order. Call service provider.
Main burner will not light.	Incorrect supply pressure. Faulty gas control.	Call service provider. Call service provider.
Piezo Ignition spark is being generated but not sparking from ignition electrode to pilot burner hood. (Griddle Option Only)	HT lead damaged or broken. Check ignition electrode is not cracked and is correctly positioned. Piezo igniter faulty.	Repair or replace HT lead. Re-position or replace ignition electrode. Replace piezo igniter. Call service provider.

NOTE: Components having adjustments protected (e.g. paint sealed) by the manufacturer, are only to be adjusted by an authorised service agent. They are not to be adjusted by an unauthorised service person.

For Refrigeration Cabinet Fault Finding refer to Refrigeration Cabinet Installation and Operation Manual supplied with appliance.

KW COMMERCIAL KITCHEN
Distributed by KW Commercial Kitchen | 1300 001 366
www.kwcommercial.com.au | sales@kwcommercial.com.au

Conversion Procedure

Caution

Ensure that the Appliance is isolated from the gas supply before commencing servicing.

NOTE:

- **These conversions should only be carried out by qualified persons. All connections must be checked for leaks before re-commissioning the appliance.**
- **Adjustment of components that have adjustments / settings sealed (e.g. paint sealed) can only be adjusted in accordance with the following instructions and shall be re-sealed before re-commissioning this appliance.**
- **For relevant gas specifications refer to 'Gas Specifications Tables' at end of this section.**

Open Burners.

1. Remove the pot stands, burner caps and burner bodies and the pot stand supports.
2. Remove injectors and replace with correct size injectors as shown in 'Gas Specifications Tables' at end of this section.

For F Options Only,
Unscrew and remove Main Injectors.

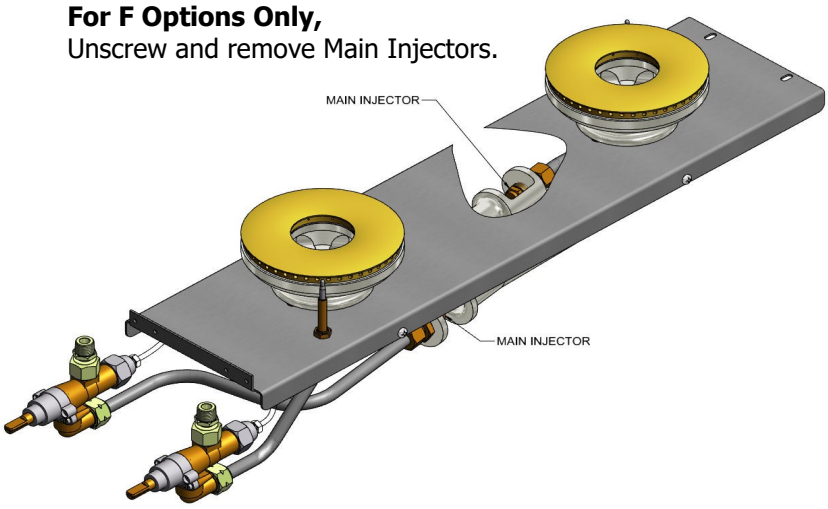

For PF Options Only,
Unscrew and remove Main and Pilot Injectors.

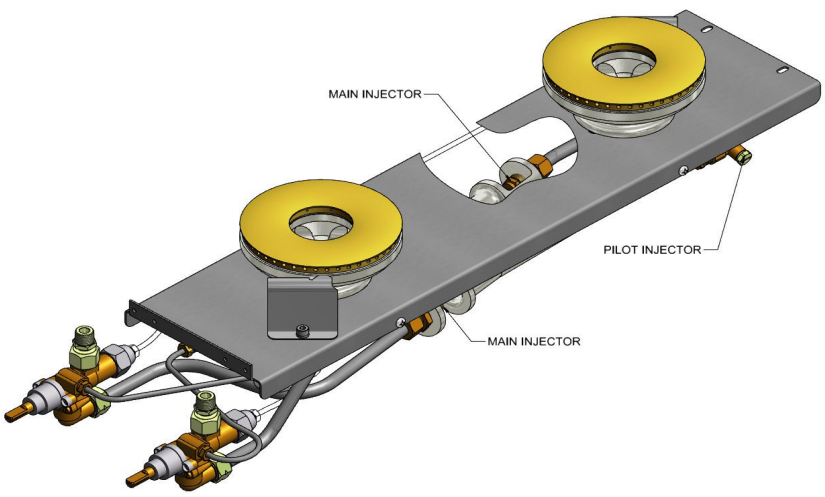

3. Refit the pot stand supports, pot stands, burner caps and burner bodies.
4. Re-light main burners and check flame size on simmer (LOW) position.

- **Adjust low fire adjustment screw on open burner gas control valves to obtain desired flame size.**

NOTE: The 'Low Fire Screw' should be sealed with coloured paint on completion of low fire adjustment.

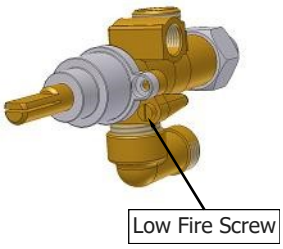

KW COMMERCIAL KITCHEN
Distributed by KW Commercial Kitchen | 1300 001 366
www.kwcommercial.com.au | sales@kwcommercial.com.au

Griddle

1. Carry out the following:-
   - Remove griddle plate section and heat shield.
   - Remove main burner.
   - Disconnect piezo igniter from mounting bracket. (For access purposes).
   - Disconnect pilot supply tube from pilot burner to access pilot injector.

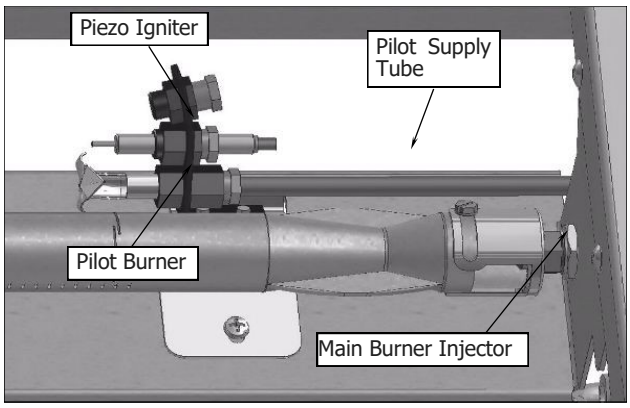

2. With Main Burner removed, ensure aeration gap is adjusted for type of gas being used as shown in 'Gas Specifications Tables' at rear of this section.

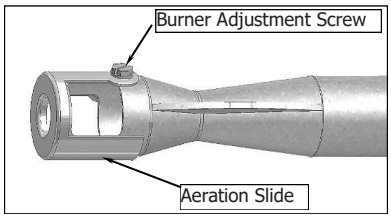

3. Remove pilot and main injectors and replace with correct size injectors as shown in 'Gas Specifications Tables' at rear of this section.

4. Refit the following:-
   - Re-connect pilot supply tube to pilot burner.
   - Re-connect piezo igniter to mounting bracket.
   - Refit main burner, gas control heat shield and griddle plate to cooktop.

5. Re-light main burners and check flame size on 'Low' flame position.
   - **Adjust low fire adjustment screw on open burner gas control valves to obtain desired flame size.**

NOTE: The 'Low Fire Screw' should be sealed with coloured paint on completion of low fire adjustment.

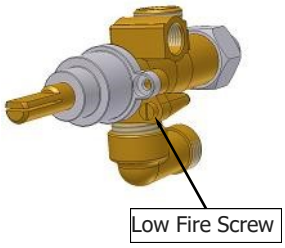

KW COMMERCIAL KITCHEN
Distributed by KW Commercial Kitchen | 1300 001 366
www.kwcommercial.com.au | sales@kwcommercial.com.au

Gas Regulator

- NAT Gas / LPG / Butane Only.

NOTE: The gas regulator supplied is convertible between Natural Gas and LP Gas, but it's outlet pressure is fixed ex-factory and is NOT to be adjusted.

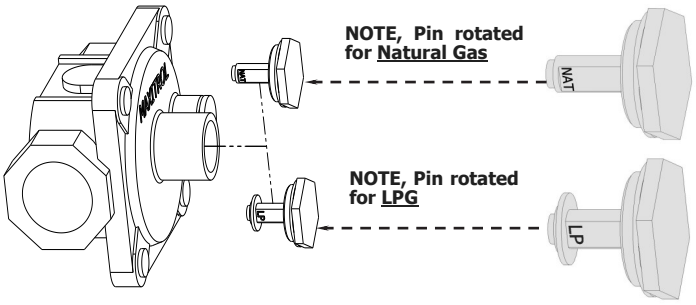

- Town Gas Only.

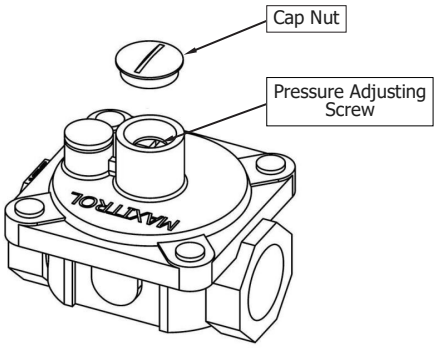

1. Remove slotted cap from regulator.
2. Turn 'On' gas supply and appliance.
3. Adjust pressure adjusting screw to achieve correct burner operating pressure.

NOTE: Measure operating pressure at manifold test point with two burners operating at 'High Flame' setting.

4. Verify operating pressure remains correct (Re-adjust regulator if required).
5. Screw cap nut back onto regulator.

Gas Type Identification Label

1. On completion of gas conversion, replace gas type identification label located at:-
2. - Rear of appliance, above gas connection.
3. - Beside the rating plate.

Commissioning

Before leaving the installation;

1. Check all gas connections for leakage using soapy water or other gas detecting equipment.

Warning

DO NOT USE A NAKED FLAME TO CHECK FOR GAS LEAKAGES.

2. Carry out a 'Commissioning' check of appliance as shown in Installation Section of this manual.
3. Ensure any adjustments done to components that have adjustments / settings paint sealed are to be re-sealed.

KW COMMERCIAL KITCHEN
Distributed by KW Commercial Kitchen | 1300 001 366
www.kwcommercial.com.au | sales@kwcommercial.com.au

Gas Specifications

- Australia

		Natural. Gas	LP Gas (Propane)
Open Burner	**Main Burner**	Ø 2.45mm	Ø 1.50mm
	Pilot Burner ('PF' Models Only)	0.30	0.20
Griddle	**Main Burner**	Ø 2.10mm	Ø 1.30mm
	Pilot Burner	0.35	0.23
	Burner Aeration Setting	Fully open	Fully open
Supply Pressure		1.13 - 3-40 kPa	2.75 - 3-40 kPa
Burner Operating Pressure (*)		0.95 kPa	2.6 kPa
Gas Regulator Cap Screw			

- New Zealand

		Natural. Gas	LP Gas
Open Burner	**Main Burner**	Ø 2.45mm	Ø 1.40mm
	Pilot Burner ('PF' Models Only)	0.30	0.20
Griddle	**Main Burner**	Ø 2.10mm	Ø 1.30mm
	Pilot Burner	0.35	0.23
	Burner Aeration Setting	Fully open	Fully open
Supply Pressure		1.13 - 3-40 kPa	2.75 - 3-40 kPa
Burner Operating Pressure (*)		0.95 kPa	2.6 kPa
Gas Regulator Cap Screw			

- United Kingdom

Category: **II_{2H3P} (20, 37).**
Flue Type: **$A_{1.}$**

		Natural Gas (G20)	Propane (G31)
Open Burner	**Main Burner Injectors**	Ø 2.30mm	Ø 1.40mm
	Pilot Burner ('PF' Models only)	0.30	0.20
Griddle	**Main Burner**	Ø 2.10mm	Ø 1.30mm
	Pilot Burner	0.35	0.23
	Burner Aeration Setting	Fully open	Fully open
Supply Pressure		20 mbar	37 mbar
Burner Operating Pressure (*)		9.5 mbar	26 mbar
Gas Regulator Cap Screw			

NOTE: **Measure burner operating pressure at manifold test point with <u>two burners</u> operating at full setting. Operating pressure is ex-factory set, through appliance regulator and is not to be adjusted, apart from when carrying out Gas Conversion, if required. (Refer to 'Gas Conversion' section for details).**

KW COMMERCIAL KITCHEN
Distributed by KW Commercial Kitchen | 1300 001 366
www.kwcommercial.com.au | sales@kwcommercial.com.au

- All Other Markets

		Natural Gas	Town Gas (**)
Open Burner	**Main Burner**	Ø 2.45mm	Ø 4.50mm
	Pilot Burner ('PF' Models only)	0.30	0.60
Griddle	**Main Burner**	Ø 2.10mm	Ø 3.40mm
	Pilot Burner	0.35	0.60
	Burner Aeration Setting	Fully open	Fully open
Supply Pressure		1.13 - 3-4 kPa	0.75 - 1.5 kPa
Burner Operating Pressure (*)		0.95 kPa	0.63 kPa
Gas Regulator Cap Screw			Adjustable Regulator (Adjust to the Burner Operating Pressure specified)

		LP Gas (Propane)	Butane
Open Burner	**Main Burner**	Ø 1.50mm	Ø 1.40mm
	Pilot Burner ('PF' Models only)	0.20	0.20
Griddle	**Main Burner**	Ø 1.30mm	Ø 1.20mm
	Pilot Burner	0.23	0.23
	Burner Aeration Setting	Fully open	
Supply Pressure		2.75 - 4.5 kPa	
Burner Operating Pressure (*)		2.6 kPa	
Gas Regulator Cap Screw			

NOTE:

- **(*) Measure Burner operating pressure at manifold test point with two burners operating at 'High Flame' setting.**
- **NAT, LPG & Butane Only - Operating pressure is ex-factory set and is not to be adjusted, unless when converting between gases, if required.**
- **(**) TOWN GAS Only - Adjust burner operating pressure using adjustable gas regulator supplied.**

KW COMMERCIAL KITCHEN
Distributed by KW Commercial Kitchen | 1300 001 366
www.kwcommercial.com.au | sales@kwcommercial.com.au

Replacement Parts List

IMPORTANT:

Only genuine authorized replacement parts should be used for servicing and repair of this appliance. Instructions supplied with parts should be followed when replacing components.

For further information and servicing instructions, contact your nearest authorized service branch (contact details are as shown on reverse of front cover of this manual).

When ordering replacement parts, please quote part number and description as listed below. If part required is not listed below, request part by description and quote model number and serial number of equipment which is shown on rating plate.

Cooktops

Open Burners

235678	Burner Body.		
227017	Burner Cap.		
030245	Injector	(Nat. Gas)	Ø 2.45mm.
030150	Injector	(LPG(Propane))	Ø 1.50mm.
030140	Injector	(LPG(Butane))	Ø 1.40mm.
030450	Injector	(Town Gas)	Ø 4.50mm.
026134	Pilot Injector	(Nat Gas)	0.30 ('PF' Option only).
026136	Pilot Injector	(LP Gas / Butane)	0.20 ('PF' Option only).
232309	Pilot Injector	(Town Gas)	0.60 ('PF' Option only).
229442	Pilot Bracket Assembly	('PF' Option only).	
229444	Pilot Burner Shield	('PF' Option only).	
227405	Gas Control	('F' Models).	
227403	Gas Control	('PF' Models).	
227967	Knob - Open Burner	('F' Models).	
227384	Knob - Open Burner	('PF' Models).	
235711	Thermocouple - Front	(200mm - Front).	
235710	Thermocouple - Rear	(600mm - Rear).	

Griddle

014105	Burner.		
032210	Injector	(Nat. Gas)	Ø 2.10mm.
032130	Injector	(LP Gas)	Ø 1.30mm.
032120	Injector	(Butane)	Ø 1.20mm.
032340	Injector	(Town Gas)	Ø 3.40mm.
227403	Gas Control.		
227384	Knob - Griddle.		
019215	Pilot Burner.		
026488	Pilot Injector	(Nat. Gas)	0.35.
019217	Pilot Injector	(LP Gas / Butane)	0.23.
018067	Pilot Injector	(Town Gas)	0.60.
019428	Thermocouple	(320mm).	
227508	Piezo Ignitor.		
228047	Piezo H.T. Lead	250mm).	
018744	Piezo Ignition Electrode.		
228288	Grease Tray	(Griddle Plates).	

KW COMMERCIAL KITCHEN
Distributed by KW Commercial Kitchen | 1300 001 366
www.kwcommercial.com.au | sales@kwcommercial.com.au

General

227015	Pot Stand.	
228881	Spill Tray 300mm.	
228882	Spill Tray 600mm.	
233502	Spill Tray LH, RN8800G Series.	
233503	Spill Tray RH, RN8800G Series.	
230247	Spill Tray 900mm.	
227855	Adjustable Leg	(84mm - Bench Models).
227850	Adjustable Leg (Flush Stud)	(150mm - CB / RB Models).
227851	Adjustable Leg Extd. Stud	(150mm - - LS Models).
229674	Rear Roller Assy.	
232351	Rear Roller Assy 3”	(RB Models).

Gas Regulators

Gas Type	Model	Gas Regulators	
		Part No.	Description
Nat. Gas LPG Butane	RN8200G	228533	½” BSP F/F Convertible.
	RN8400G RN8600G RN8800G	228531	¾” BSP F/F Convertible.
Town Gas	ALL	230185	¾” BSP F/F Adjustable.

Gas Conversion Kits

Models		Gas Type to Convert to					
		Nat. Gas	LP Gas (Propane)	LP Gas (Butane)	Town Gas	Nat. Gas (UK)	LPG (UK - Propane)
'F' Models	RN8200G	231837	231836	231838	231839	231869	231868
	RN8400G	231841	231840	231842	231843	231871	231870
	RN8600G	231845	231844	231846	231847	231873	231872
	RN8800G	231849	231848	231850	231851	231875	231874
PF' Models	RN8200G	231853	231852	231854	231855	231877	231876
	RN8400G	231857	231856	231858	231859	231879	231878
	RN8600G	231861	231860	231862	231863	231881	231880
	RN8800G	231865	231864	231866	231867	231883	231882

NOTE: Each gas conversion kit is universal for all hob open burner and griddle variations possible within the model specified.

Accessories

228566	Griddle Scraper Tool.
228567	Smooth Plate Scraper Blades (Pack of 2 blades).
228795	600mm Plinth Kit.
228799	900mm Plinth Kit.
228803	1200mm Plinth Kit.
228801	Refrigeration Base - 900mm Plinth Kit.
228805	Refrigeration Base - 1200mm Plinth Kit.

For Refrigeration Cabinet Replacement Parts information refer to Refrigeration Cabinet Installation and Operation Manual supplied with appliance.

KW COMMERCIAL KITCHEN
Distributed by KW Commercial Kitchen | 1300 001 366
www.kwcommercial.com.au | sales@kwcommercial.com.au