## PRODUCT DOCUMENT PACK

Prepared and distributed by KW Commercial Kitchen

### PRODUCT

# Waldorf INLB8400R5F-LS 900mm Electric Induction Cooktop Low Back Version - Leg Star

## Model / SKU: INLB8400R5F-LS


### KW COMMERCIAL KITCHEN

7/72 Canterbury Road, Bankstown NSW 2200

Phone 1300 001 366

Email sales@kwcommercial.com.au

Web www.kwcommercial.com.au


Scan for the current KW product page

### DOCUMENT NOTICE

The supplier document begins on the next page. KW contact branding is added in a separate footer area and does not replace the supplier's instructions, specifications or warranty terms.

Official supplier source: https://moffat.global.ssl.fastly.net/sites/default/files/products/cutsheet/INLB8400RF_DS_AN.pdf

Waldorf Bold

Technical data sheet for

# Induction Cooktop **900mm**

## - ROUND & FULL AREA INDUCTION ZONE

INLB8400R3F-B, INLB8400R3F-LS, INLB8400R3F-CD, INLB8400R5F-B, INLB8400R5F-LS, INLB8400R5F-CD

INLB8400R5F-CD

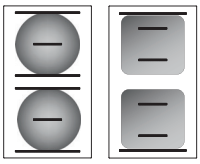

### SPECIFICATIONS

**Cooktop**
2 x 3.5kW induction zones or
4 x 5.0kW induction zones
Ø 270mm induction zones and
2 x 5.0kW full area induction zones

**Electrical requirements**
**INLB8400R3F**
17.0kW, 400-415V, 50/60Hz, 3P+E
24A / phase
**INLB8400R5F**
20.0kW, 400-415V, 50/60Hz, 3P+E
28A / phase

**Dimensions**
**Bench model**
Width 900mm
Depth 805mm
Height 355mm
Incl. splashback 570mm
Incl. low back 410mm

**All models (excluding Bench model)**
Width 900mm
Depth 805mm
Height 915mm
Incl. splashback 1130mm
Incl. low back 970mm

**Nett weight**
105kg

**Packing data**
1.03m3, 157kg
Width 945mm
Depth 865mm
Height 1255mm

**OPTIONS AT EXTRA COST**
Castors
Plinth mounting

INLB8400-B

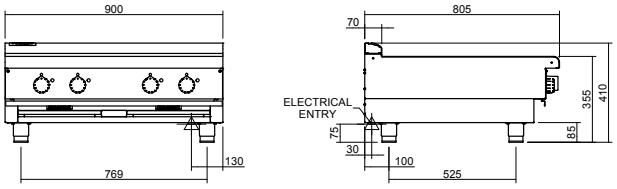


INLB8400-LS

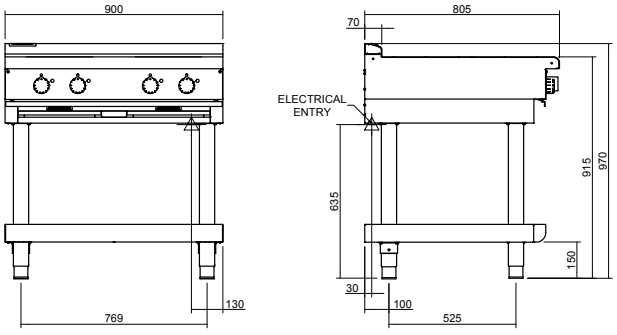


INLB8400-CD

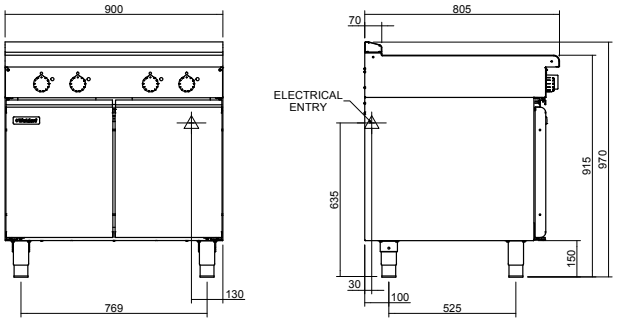


INLB8400R3F / INLB8400R5F

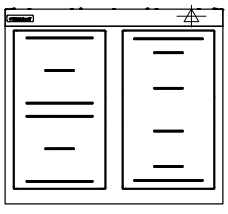

**Induction Zone Options**

F - Full area induction
R3 - 3.5kW round induction
R5 - 5kW round induction

**Series Options**

INLB - Low back models
INB - 215mm splashback option

MOFFAT

Australia moffat.com.au
New Zealand moffat.co.nz

In line with policy to continually develop and improve its products, Moffat Limited reserves the right to change specifications and design without notice.

ISO9001 Quality Management Standard

© Copyright Moffat Ltd AN.WB.01.2023

an Ali Group Company

The Spirit of Excellence